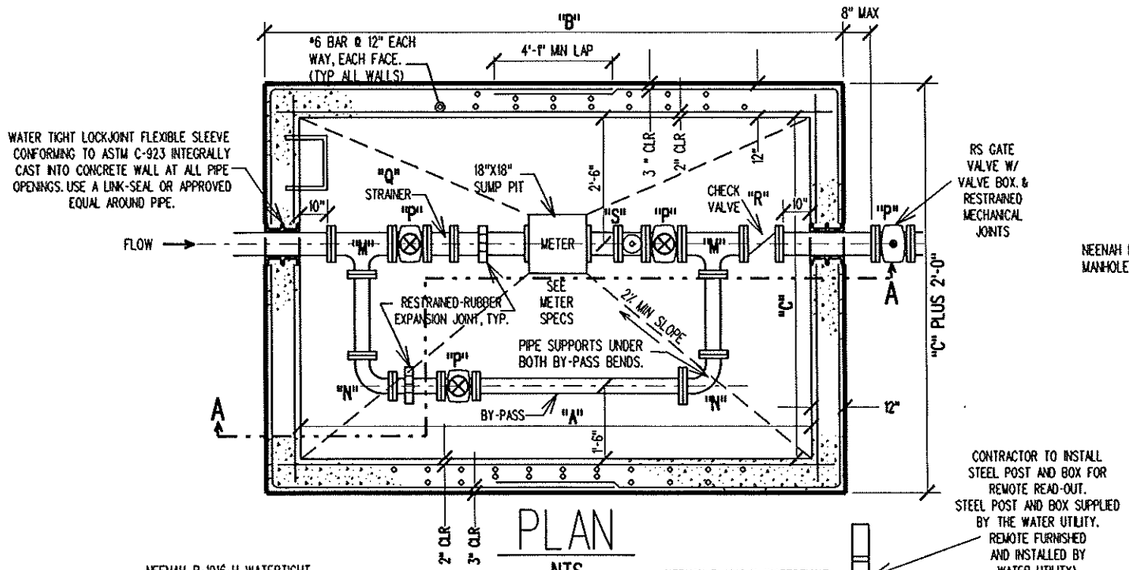

PLAN

NTS

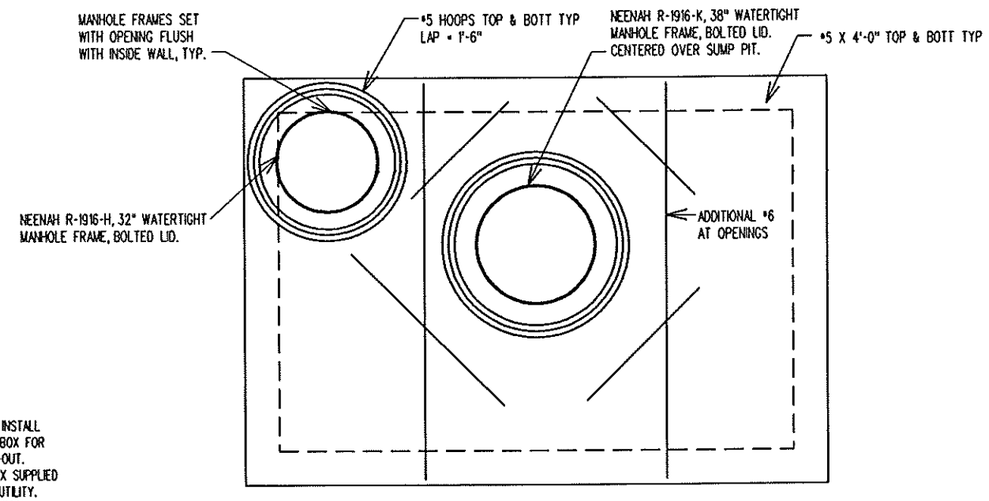

METER PIT ROOF DETAIL

NTS

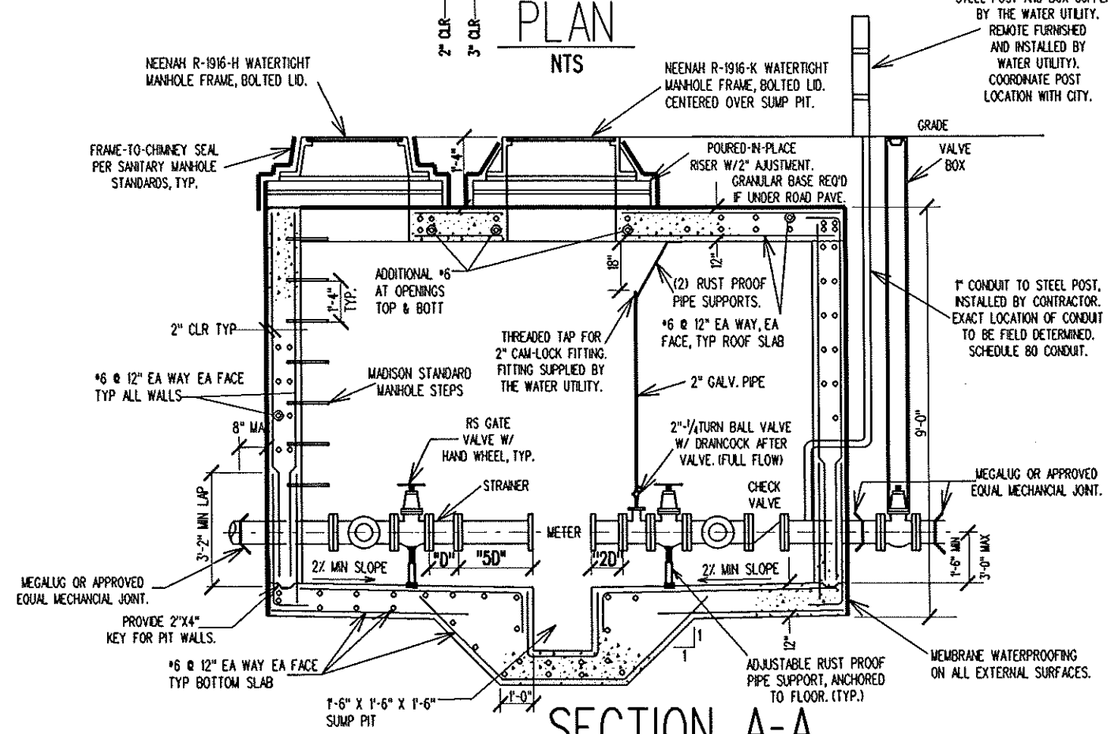

SECTION A-A

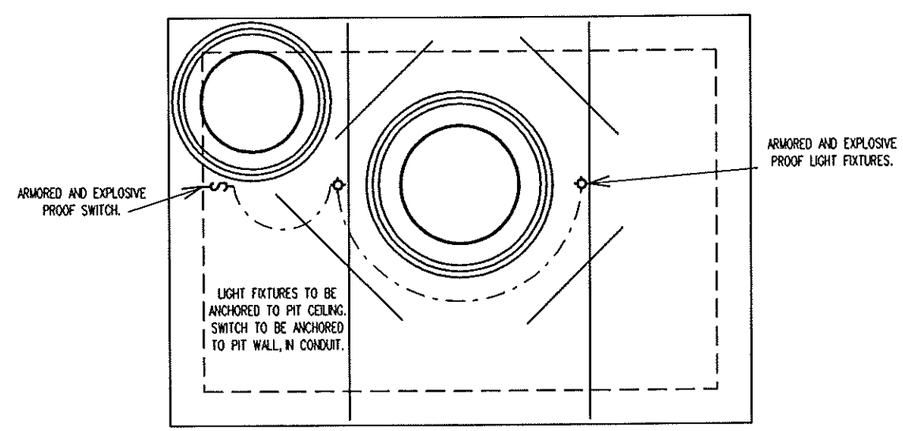

METER PIT LIGHT DTL.

NTS

REV. 1/23/08

MADISON WATER UTILITY	MADISON, WISCONSIN	COUNTY:DANE	WATER METER PIT CONSTRUCTION DETAIL -- 7.06a	1/24/07

FILE NAME : M:\DESIGN\WATER\DETAILS\METERS\METER PIT-SUMP.DGN