Madison, Wisconsin

CITY OF MADISON

CITY ENGINEERING DIVISION
DEPARTMENT OF PUBLIC WORKS
PLAN OF PROPOSED IMPROVEMENT

801 E. WASHINGTON AVENUE – THE COSMOS

INDEX OF SHEETS

SHEET NO.	1	TITLE
SHEET NO.	D1–D2	DETAILS
SHEET NO.	E1	ELECTRICAL PLAN
SHEET NO.	P1	SIDEWALK PLAN AND PROFILE
SHEET NO.	L1	LANDSCAPING PLAN
SHEET NO.	C400	UTILITY PLAN

CITY PROJECT NO. 11521
CITY CONTRACT NO. 7875
MUNIS NO. 11521

CONVENTIONAL SIGNS
FIELD VERIFY ALL UTILITY LOCATIONS

GAS	G
STORM SEWER	ST
SANITARY SEWER	SAN
WATER	W
OVERHEAD ELECTRIC	OH
POWER POLE	ϕ
ADA COMPLIANT RAMP W/ DETECTABLE WARNING FIELD	
COMBUSTIBLE FLUIDS	

CONSTRUCTION
PROJECT LOCATION

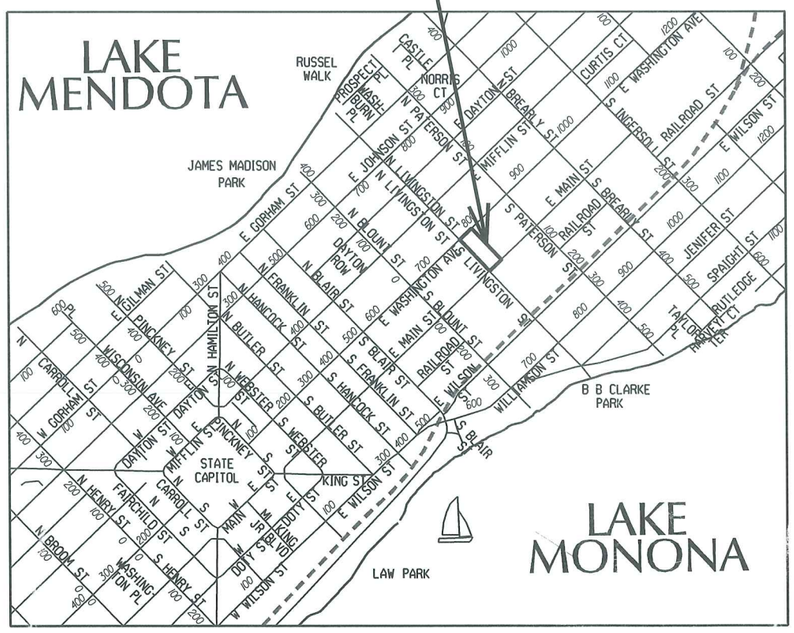

PUBLIC IMPROVEMENT PROJECT APPROVED

MAY 2, 2017

BY THE COMMON COUNCIL OF MADISON, WISCONSIN

PUBLIC IMPROVEMENT DESIGN APPROVED BY:

City Engineer — Date: 3/14/18

WATER AND STORM & SANITARY SEWERS DESIGNED BY:

SEE C400 SHEET

STREET DESIGNED BY:

WISCONSIN
JOHN P. SAPP
44054
Janesville, WI
3-9-18
PROFESSIONAL ENGINEER

ELECTRICAL DESIGNED BY:

WISCONSIN
BRIAN J. SMITH
E-37284
MADISON WI
3-9-18
PROFESSIONAL ENGINEER

PLOT SCALE:
PLOT NAME:
REV. DATE:
ORIGINATOR: CITY_OF_MADISON_STREETS_DIVISION

FILE NAME: M:\DESIGN\Projects\11521\Streets\Design\11521EN-TitleSht.dgn

DATE: 3/5/2018

EXISTING STREET TREES SHALL BE PROTECTED. CONTRACTOR SHALL INSTALL TREE PROTECTION FENCING IN THE AREA BETWEEN THE CURB AND SIDEWALK AND EXTEND IT AT LEAST 5 FEET FROM BOTH SIDES OF THE TREE ALONG THE LENGTH OF THE TERRACE. NO EXCAVATION IS PERMITTED WITHIN 5 FEET OF THE OUTSIDE EDGE OF A TREE TRUNK. IF EXCAVATION WITHIN 5 FEET OF ANY TREE IS NECESSARY, CONTRACTOR SHALL CONTACT CITY FORESTRY (266–4816) 48 HOURS PRIOR TO EXCAVATION TO ASSESS THE IMPACT TO THE TREE AND ROOT SYSTEM. TREE PRUNING SHALL BE COORDINATED WITH CITY FORESTRY PRIOR TO THE START OF CONSTRUCTION. TREE PROTECTION SPECIFICATIONS CAN BE FOUND IN SECTION 107.13 OF CITY OF MADISON STANDARD SPECIFICATIONS FOR PUBLIC WORKS CONSTRUCTION –HTTP://WWW.CITYOFMADISON.COM/BUSINESS/PW/DOCUMENTS/STDSPECS/2013/PART1.PDF

CONTRACTOR SHALL CONTACT CITY FORESTRY BRAD HOFMANN BHOFMANN@CITYOFMADISON.COM OR 266–4816 AT LEAST ONE WEEK PRIOR TO PLANTING TO SCHEDULE INSPECTING THE NURSERY STOCK AND REVIEW PLANTING SPECIFICATIONS WITH THE LANDSCAPER.

ANY TREE REMOVALS THAT ARE REQUIRED FOR CONSTRUCTION WILL REQUIRE AT LEAST A 72 HOUR WAIT PERIOD BEFORE A TREE REMOVAL PERMIT CAN BE ISSUED BY FORESTRY, TO NOTIFY THE ALDER OF THE CHANGE IN THE TREE PLAN.

CONTRACTOR/DEVELOPER SHALL SUBMIT A TRAFFIC CONTROL PLAN TO CITY TRAFFIC ENGINEERING AT LEAST 10 WORKING DAYS PRIOR TO THE START OF WORK. WORK WITHIN THE RIGHT–OF–WAY SHALL NOT BEGIN UNTIL THE TRAFFIC CONTROL PLAN IS APPROVED.

ANY PAVEMENT MARKINGS THAT ARE REMOVED OR DAMAGED SHALL BE REPLACED BY THE DEVELOPER/CONTRACTOR AS DIRECTED BY CITY TRAFFIC ENGINEERING.

ALL CURB & PAVEMENT WITHIN THE SOUTH LIVINGSTON ROW TO BE BY CITY PUBLIC PROJECT NUMBER 11599. THIS ALSO INCLUDES THE CURB BUMPOUT AND PAVEMENT WORK THAT TERMINATES ON E. MAIN ST. AT STA 18+42.

FURTHER DOWN E. MAIN ST., THE CURB FROM STA 18+90 TO STA 19+75 TO BE COMPLETED BY CITY PRIVATE PROJECT NO. 11521

SEVERAL CONSTRUCTION PROJECTS ARE TAKING PLACE AT THE SAME TIME ADJACENT TO PROJECT NO. 11521:

PROJECT NAME	PROJECT NO.	LOCATION RELATIVE TO 11521
S. LIVINGSTON ST. RECONSTRUCTION	CITY PUBLIC PROJECT NO. 11599	ADJACENT CURB & PAVEMENT ON S. LIVINGSTON
819 E. WASHINGTON AVE SPARK PROJECT	CITY PRIVATE PROJECT NO. 11520	NEIGHBORING PROPERTY TO THE NORTHEAST
CAPITAL EAST GARAGE	CITY PUBLIC PROJECT NO. 1627	ACROSS E. MAIN ST. ACROSS S. LIVINGSTON AND
MG&E ROW & SITE WORK		OPPOSITE CORNER FROM S. LIVINGSTON ST. & E. MAIN ST.

COORDINATE WORK WITH NEIGHBORING CONSTRUCTION PROJECTS TO AVOID CONFLICTS.

ALL PAVEMENT WITHIN THE EAST MAIN STREET RIGHT–OF–WAY SHALL BE TYPE C PAVEMENT.

ALL PAVEMENT WITHIN THE EAST WASHINGTON AVENUE RIGHT–OF–WAY SHALL BE 10" DOWELED CONCRETE PAVEMENT.

ALL GUTTERS SHALL DRAIN WITH A MINIMUM GRADES OF 0.5% TOWARD STORM SEWER INLETS.

THE CROSS SLOPE OF SIDEWALKS AND BARRIER FREE SIDEWALK CURB RAMPS SHALL BE 1.5%. THE LONGITUDINAL GRADE OF BARRIER FREE SIDEWALK CURB RAMPS SHALL NOT EXCEED 8.33%. ALL SIDEWALK RAMPS SHALL BE CONSTRUCTED ACCORDING TO S.D.D. 3.03. AT ALL OTHER LOCATIONS THE LONGITUDINAL GRADE OF SIDEWALKS SHALL NOT EXCEED 5.0 % OR THE ADJACENT STREET GRADE WHICHEVER IS GREATER NOR BE LESS THAN 0.4% AND SHALL DRAIN TOWARD STORM SEWER INLETS. SIDE SLOPES WITHIN TEN FEET OF A PUBLIC SIDEWALK SHALL NOT EXCEED 4.00:1. ALL SIDEWALK AND SIDEWALK RAMP ELEVATIONS AND GRADES SHALL BE FIELD VERIFIED AND SET TO COMPLY WITH THE CITY OF MADISON STANDARD SPECIFICATIONS AND THE A.D.A. GUIDELINES.

POWER POLES AND OTHER OBSTRUCTIONS SHALL BE MOVED TO PROVIDE 2 FEET MINIMUM OF CLEAR DISTANCE FROM ANY FACE OF CURB OR EDGE OF SIDEWALK.

THERE MAY BE EXISTING UTILITIES OR OTHER FEATURES WHICH ARE EITHER NOT SHOWN OR SHOWN INCORRECTLY ON THIS PLAN. IT IS THE RESPONSIBILITY OF THE DEVELOPER TO LOCATE AND IDENTIFY ALL UTILITIES AND TOPOGRAPHY WHICH MAY AFFECT THE CONSTRUCTION OF THESE IMPROVEMENTS.

ALL PERMANENT SIGNING AND POSTING WILL BE DETERMINED AND PROVIDED BY THE TRAFFIC ENGINEERING DIVISION, FOLLOWING CONSTRUCTION OF THESE IMPROVEMENTS.

THE DEVELOPER SHALL PROVIDE, INSTALL AND MAINTAIN ALL STREET END BARRICADES, SIGNING AND TRAFFIC CONTROL, AS REQUIRED BY THE CITY TRAFFIC ENGINEER.

PAVEMENT SAWCUTS SHALL BE AS DIRECTED BY THE CITY CONSTRUCTION ENGINEER. SAWCUTS SHOWN ON THE PLAN ARE APPROXIMATE.

DAMAGE TO ANY EXISTING CURB, PAVEMENT, SIDEWALK, ETC. THAT IS TO REMAIN SHALL BE REPAIRED BY THE DEVELOPER/CONTRACTOR AS DIRECTED BY THE ENGINEER.

DEVELOPER/CONTRACTOR SHALL COORDINATE WITH ALL UTILITY COMPANIES TO ADJUST STRUCTURES, MANHOLES, HANDHOLES, ETC. AS NEEDED TO MATCH THE GRADE OF THE NEW PAVEMENT.

ANY WORK SHOWN ON THIS PLAN THAT IS OUTSIDE OF THE RIGHT–OF–WAY OR BEYOND THE LIMITS OF THIS PROJECT SHALL BE CONSIDERED APPROXIMATE AND NOT FOR CONSTRUCTION.

PLOT SCALE: ____
PLOT NAME: ____
REV. DATE: ____
ORIGINATOR: CITY OF MADISON, STREETS DIVISION

801 E WASHINGTON AVE - THE COSMOS PROJECT NO. 11521	SHEET NO. D-2
DETAIL	
TYPICAL SECTION	CITY OF MADISON

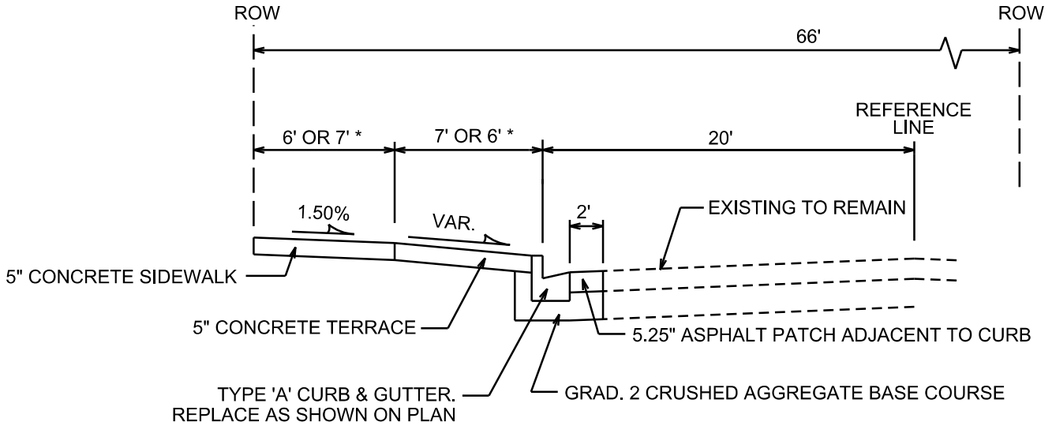

TYPICAL SECTION

E. MAIN ST.
FROM STA 18+20 TO STA 19+76
NOT TO SCALE

* 7' SIDEWALK / 6' TERRACE FROM STA 18+20 TO 18+55
6' SIDEWALK / 7' TERRACE FROM STA 18+55 TO 19+76

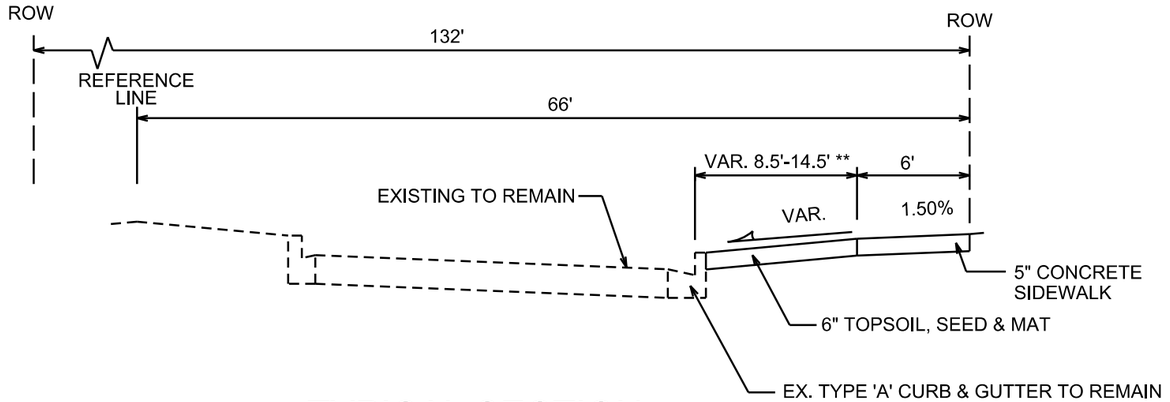

TYPICAL SECTION

E. WASHINGTON AVE.
FROM STA 241+41 TO 242+67
NOT TO SCALE

** 14.5' TERRACE FROM STA 241+41 TO 241+91
VAR. FROM STA 241+91 TO 242+19
8.5' FROM STA 241+19 TO 242+67

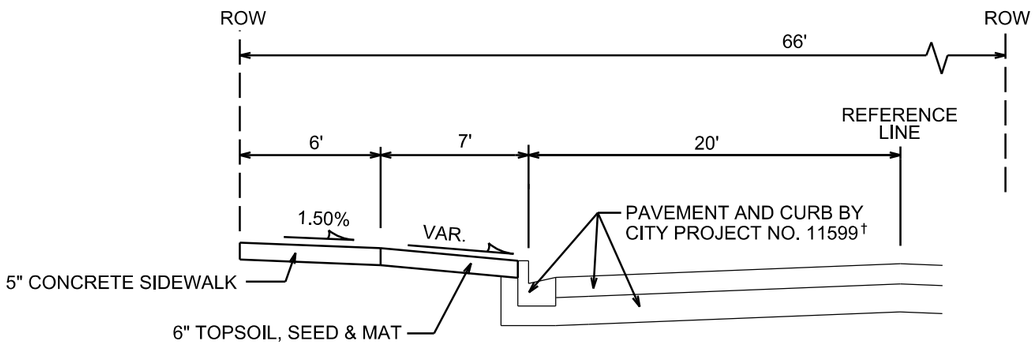

TYPICAL SECTION

S. LIVINGSTON ST.
FROM STA 118+63 TO STA 120+70
NOT TO SCALE

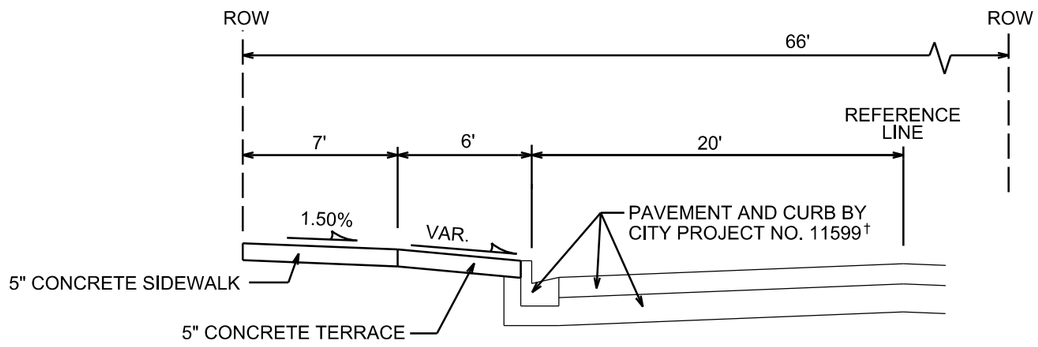

TYPICAL SECTION

S. LIVINGSTON ST.
FROM STA 120+70 TO STA 121+95
NOT TO SCALE

† ALL CURB & PAVEMENT WITHIN THE SOUTH LIVINGSTON ROW TO BE BY CITY PUBLIC PROJECT NUMBER 11599. THIS ALSO INCLUDES THE CURB BUMPOUT AND PAVEMENT WORK THAT TERMINATES ON E MAIN AT STA 18+42. SEE SHEET D1 FOR ADDITIONAL PROJECT COORDINATION INFORMATION.

FARTHER DOWN E. MAIN ST., THE CURB FROM STA 18+90 TO STA 19+75 TO BE COMPLETED BY PROJECT NO. 11521

PLOT SCALE: ____
PLOT NAME: ____
REV: DATE: ____
ORIGINATOR: CITY OF MADISON, STREETS DIVISION

FILE NAME: M:\DESIGN\Projects\11521\Streets\Design\11521EN-D2_TypSection.dgn DATE: 3/5/2018

801 E. WASHINGTON AVE - THE COSMOS PROJECT NO. 11521	SHEET NO. E 1
ELECTRICAL SHEET LIVINGSTON, MAIN & E. WASHINGTON	CITY OF MADISON

GENERAL ELECTRICAL NOTES:

1. ALL LOCATIONS ARE APPROXIMATE. THE TRAFFIC ENGINEER SHALL APPROVE FINAL LOCATIONS INCLUDING SETBACK IN THE FIELD. AFTER CONTRACTOR SURVEYS STAKING, THE CONTRACTOR SHALL NOTIFY BRIAN SMITH (261-9625) CITY TRAFFIC ENGINEERING, AT LEAST 24-HOURS IN ADVANCE OF NEEDING BASE LOCATIONS MARKED.
2. THE CONTRACTOR SHALL DO ALL WORK IN ACCORDANCE WITH CITY OF MADISON STANDARD SPECIFICATIONS FOR PUBLIC WORKS CONSTRUCTION 2017 EDITION AND ALL ADDENDUMS THERETO. ALL CONDUIT SHALL BE PVC SCHEDULE 80 UNDER PAVEMENT OR SCHEDULE 40 OTHERWISE. PULL WIRE REQUIRED AS PER STANDARD SPECIFICATIONS.
3. THE CONTRACTOR SHALL CALL MIKE BENZSCHAWEL (266-4767) AT THE TRAFFIC ENGINEERING SHOP AT LEAST 24-HOURS IN ADVANCE OF POURING BASES, INSTALLING ELECTRIAL HANDHOLES OR BURYING CONDUIT TO ARRANGE FOR INSPECTION.
4. ALL EXISTING STREET LIGHT, TRAFFIC SIGNALS AND CONDUITS ARE TO REMAIN UNLESS AND UNTIL AUTHORIZED TO REMOVE BY TRAFFIC ENGINEERING.
5. THE FOLLOWING CITY FURNISHED MATERIALS ARE TO BE PICKED UP AT THE TRAFFIC TRAFFIC OPERTION SHOP, 1120 SAYLE STREET. NOTIFY DENNIS ROWE AT 266-9034 TWENTY FOUR (24) HOURS PRIOR TO PICKING UP THE MATERIAL.

3/4" x 24" ANCHOR BOLTS:	20
1" X 40" ANCHOR BOLTS:	4
TYPE-1 ELECTRIAL HANDHOLE:	1
TYPE-5 ELECTRIAL HANDHOLE:	1

LEGEND

- PLACE STREET LIGHTING PVC CONDUIT, 2" UNLESS NOTED AS OTHER
- PLACE SIGNAL/COMMUNICATION PVC COUNDUIT, 3" UNLESS NOTED AS OTHER
- EXISTING STREET LIGHTING CONDUIT
- EXISTING SIGNAL/COMMUNICATION CONDUIT
- INSTALL CITY FURNISHED TYPE-1 ELECTRICAL HANDHOLE
- INSTALL CITY FURNISHED TYPE-5 ELECTRICAL HANDHOLE
- CONSTRUCT LB-1 BASE
- CONSTRUCT LB-3 BASE
- EXISTING STREET LIGHT POLE/BASE
- EXISTING TRAFFIC SIGNAL POLE/BASE
- EXISTING TYPE-1 ELECTRICAL HANDHOLE

SCALE: 1" = 30'

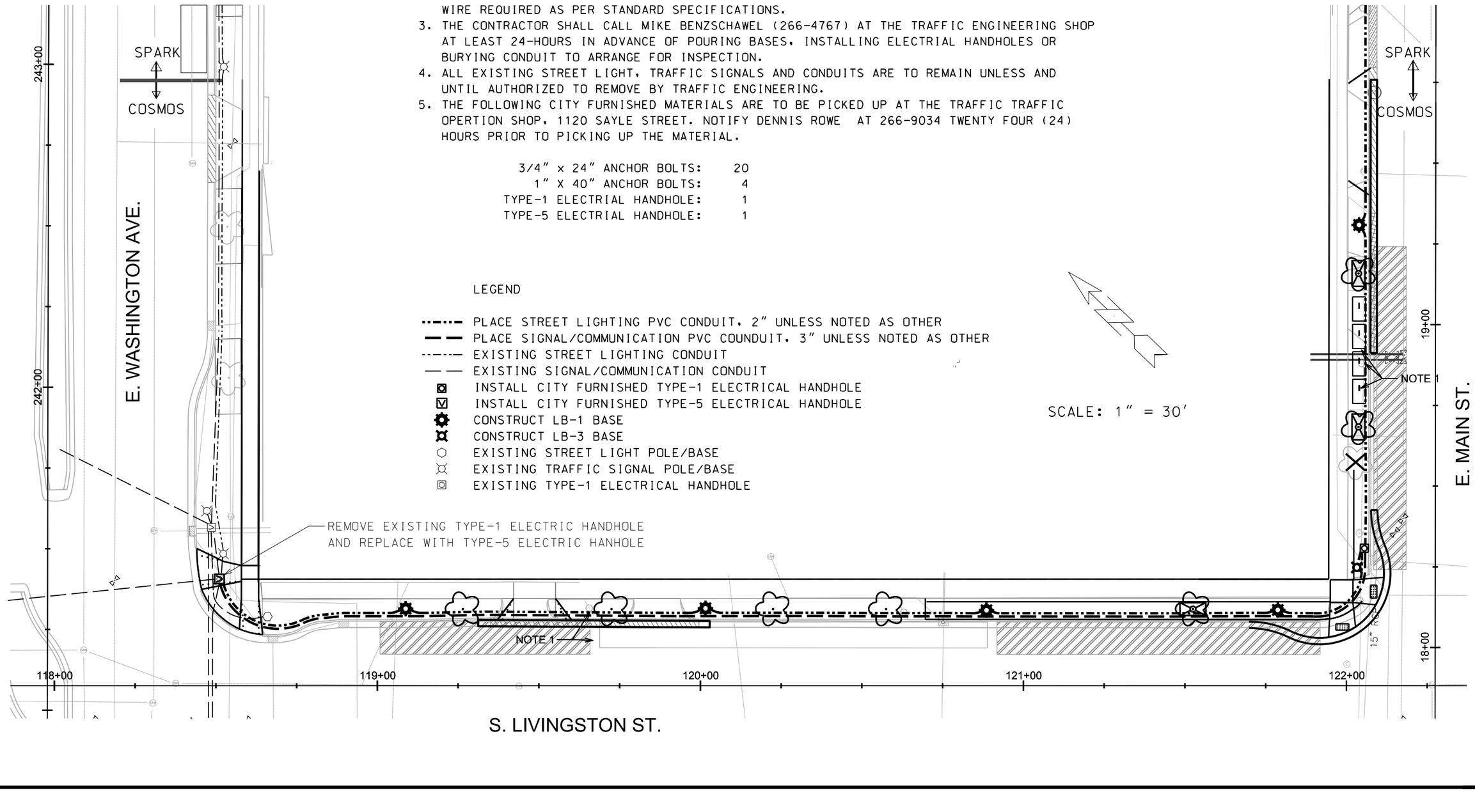

801 E. WASHINGTON AVENUE - THE COSMOS
PROJECT NO. 11521

SHEET NO. P-1

SIDEWALK PLAN AND PROFILE

E. WASHINGTON AVE., S. LIVINGSTON ST., & E. MAIN ST

CITY OF MADISON

SCALE 1"=40'

NOTES:

1. DEVELOPER SHALL BE RESPONSIBLE FOR COORDINATING AND SCHEDULING ANY REQUIRED RELOCATION OR ADJUSTING OF PRIVATE UTILITY FACILITIES, SUCH AS POLES, PEDESTALS, BOXES, STRUCTURES, CASTINGS, OR MANHOLES, WITH PRIVATE UTILITY COMPANIES.
2. REMOVE DRIVEWAY APRON. REPLACE WITH 6" TOPSOIL, SEED AND MAT. REPLACE CURB TO CLOSE OPENING. CURB REPLACEMENT ON S. LIVINGSTON ST BY CITY PUBLIC PROJECT NO. 11599
3. REMOVE DRIVEWAY APRON AND CLOSE CURB OPENING. REPLACE WITH 5" CONC. TERRACE. PATCH 2' WIDTH OF PAVEMENT FULL DEPTH ADJACENT TO CURB ON E. MAIN ST. CURB REPLACEMENT ON E. MAIN ST IS WITHIN THE SCOPE OF WORK FOR CITY PRIVATE PROJECT NO . 11521
4. 7" CONC. SIDEWALK AND DRIVEWAY APRON. REPLACE CURB AS NECESSARY TO SHIFT DRIVEWAY OPENING. CURB REPLACEMENT ON E. MAIN ST IS WITHIN THE SCOPE OF WORK FOR CITY PRIVATE PROJECT NO . 11521

ALL PAVEMENT AND CURB WORK ON S LIVINGSTON ST BY OTHERS. SEE PROJECT 11599. FOR S LIVINGSTON ST, ONLY THE LT SIDEWALK AND LT TERRACE ARE IN THE 11521 PROJECT SCOPE OF WORK. SEE SHEET D1 FOR ADDITIONAL PROJECT COORDINATION INFORMATION.

E. WASHINGTON AVE.

S. LIVINGSTON ST.

E. MAIN ST.

TEST PIT 1

PROTECT TREE ID #5701

PROTECT TREE ID #5703

PROTECT STREET AND TRAFFIC SIGNALS

2' CONC. WATERWAY

CURB OPENING FROM STA 119+37.12 TO 119+60.12. CURB WORK BY PROJ. 11599

GRASS TERRACE

6' SIDEWALK

7' SIDEWALK

CONC. TERRACE

STA 242+67.23, RT 66.00'
849.71 BW/MATCH SIDEWALK

STA 242+37.00, RT 66.00'
849.97 BW/ENTRANCE HI POINT

STA 242+19.00, RT 66.00'
849.66 BW/LO POINT

STA 241+62.00, RT 66.00'
849.95 BW/ENTRANCE HI POINT

STA 241+45.72, RT 66.00'
849.41 BW/KEYSTONE

STA 241+40.72, RT 66.00'
STA 118+63.86, LT 32.58'
849.33 BW/KEYSTONE LO POINT

STA 118+83.00, LT 32.61'
850.00 BW/HI POINT

STA 119+18.00, LT 32.68'
849.83 BW/LO POINT

STA 120+12.50, LT 32.85'
850.69 BW/HI POINT

STA 120+75.00, LT 32.97'
850.38 BW/LO POINT

STA 121+00.00, LT 33.01'
850.51 BW/HI POINT

STA 18+20.94, LT 32.46'
STA 121+94.97, LT 32.98'
850.03 BW/KEYSTONE LO POINT

STA 19+75.78, LT 35.00'
850.69 BW/MATCH SIDEWALK

STA 19+44.50, LT 33.00'
850.31 BW/LO POINT
DWAY EDGE

STA 19+10.00, LT 33.00'
850.48 BW/HI POINT

STA 120+59.59, LT 26.94'
850.38 BW/TRANS. TO 7' WIDE SIDEWALK

STA 120+69.95, LT 26.96'
850.30 FW/BEGIN 7' WIDE SIDEWALK

NOTE 1

NOTE 2

NOTE 3

NOTE 4

EX. BACK OF SIDEWALK PROFILE

PROP. BACK OF SIDEWALK PROFILE

PROP. BACK OF SIDEWALK ELEV.

VPI 242+67.23 849.71
VPI 242+37.00 849.97
VPI 242+19.00 849.66
VPI 241+62.00 849.96
VPI 241+45.05 849.33
VPI 241+40.05 849.41
VPI 118+63.24 849.33
VPI 118+83.00 850.00
VPI 119+18.00 849.88
VPI 120+12.50 850.69
VPI 120+75.00 850.88
VPI 121+00.00 850.51
VPI 121+95.16 850.03
VPI 19+75.78 850.69
VPI 19+44.52 850.31
VPI 19+10.23 850.48
VPI 18+20.48 850.03

-0.86% 1.72% -0.51% 3.19% 1.60% 3.39% -0.49% 0.91% -0.50% 0.50% -0.50% 1.22% -0.50% 0.50%

849.86 849.76 849.76 849.88 849.55 849.73 849.92 849.89 850.12 850.35 850.58 850.63 850.51 850.38 850.51 850.38 850.26 850.13 850.68 850.38 850.41 850.43 850.30 850.18 850.05

PLOT SCALE: ——
PLOT NAME: ——
REV. DATE: ——
ORIGINATOR: CITY OF MADISON, STREETS DIVISION

FILE NAME: M:\DESIGN\Projects\11521\Streets\Design\11521EN-P1_PnP##.dgn

DATE: 3/5/2018

801 E. WASHINGTON AVENUE - THE COSMOS
PROJECT NO. 11521

SHEET NO.
L-1

PLAN

E. WASHINGTON AVE., S. LIVINGSTON ST., & E. MAIN ST

CITY OF MADISON

PLOT SCALE: ____

PLOT NAME: ____

REV. DATE: ____

ORIGINATOR: CITY OF MADISON, STREETS DIVISION

ID #5695

ID # 5696

TEST PIT 1

SPARK

COSMOS

PROTECT TREE ID #5701

PROTECT TREE ID #5703

PROTECT STREET LIGHT AND TRAFFIC SIGNALS

E. WASHINGTON AVE.

S. LIVINGSTON ST.

E. MAIN ST.

SCALE 1"=40'

NOTES:

1. EXISTING STREET TREES SHALL BE PROTECTED. CONTRACTOR SHALL INSTALL TREE PROTECTION FENCING IN THE AREA BETWEEN THE CURB AND SIDEWALK AND EXTEND IT AT LEAST 5 FEET FROM BOTH SIDES OF THE TREE ALONG THE LENGTH OF THE TERRACE. NO EXCAVATION IS PERMITTED WITHIN 5 FEET OF THE OUTSIDE EDGE OF A TREE TRUNK. IF EXCAVATION WITHIN 5 FEET OF ANY TREE IS NECESSARY, CONTRACTOR SHALL CONTACT CITY FORESTRY (266-4816) 48 HOURS PRIOR TO EXCAVATION TO ASSESS THE IMPACT TO THE TREE AND ROOT SYSTEM. TREE PRUNING SHALL BE COORDINATED WITH CITY FORESTRY PRIOR TO THE START OF CONSTRUCTION. TREE PROTECTION SPECIFICATIONS CAN BE FOUND IN SECTION 107.13 OF CITY OF MADISON STANDARD SPECIFICATIONS FOR PUBLIC WORKS CONSTRUCTION
-HTTP://WWW.CITYOFMADISON.COM/BUSINESS/PW/DOCUMENTS/STDSPECS/2013/PART1.PDF
2. ANY TREE REMOVALS THAT ARE REQUIRED FOR CONSTRUCTION WILL REQUIRE AT LEAST A 72 HOUR WAIT PERIOD BEFORE A TREE REMOVAL PERMIT CAN BE ISSUED BY FORESTRY, TO NOTIFY THE ALDER OF THE CHANGE IN THE TREE PLAN.
3. CONTRACTOR SHALL CONTACT CITY FORESTRY BRAD HOFMANN BHOFMANN@CITYOFMADISON.COM OR 266-4816 AT LEAST ONE WEEK PRIOR TO PLANTING TO SCHEDULE INSPECTING THE NURSERY STOCK AND REVIEW PLANTING SPECIFICATIONS WITH THE LANDSCAPER.

TREE KEY:
- (HBY) = HACKBERRY
- (EKC) = 'ESPRESSO' KENTUCKY COFFEETREE
- (NHE) = 'NEW HORIZON' ELM
- (SLL) = 'SKYLINE' HONEYLOCUST
- ⊠ = 4' X 8' TREE FRAME & GRATE PER S.D.D. 3.15

INSTALL 4 (FOUR) POST & RINK BIKE RACKS AT 8.5' ON CENTER. MANUFACTUER & MODEL SHALL BE MADRAX PAR-2 OR APPROVED EQUIVALENT. USE FLANGE SURFACE MOUNT WITH A GALVANIZED FINISH.

REMOVE TREE. NOTE 2. ID #5730

REMOVE TREE. NOTE 2 ID #5731

ID #5728

ID #5729

HBY EKC NHE EKC NHE NHE SLL

17.7' 10.7' 12.1' 26.3' 23.7' 31.1' 26.3'

62.5' 46' 50' 35' 95' 42'

118+00 119+00 120+00 121+00 122+00 123+00

241+00 242+00 243+00 244+00 18+00 19+00 20+00

POB 241+00.00 POE 241+94.46 POB 121+94.46 POE 122+42.18

15' 10' 12' 47.5' 47.1' 60.2'

15" RCP

FILE NAME: M:\DESIGN\Projects\11521\Streets\Design\11521EN-L1_LandscapingPlan.dgn

DATE: 3/5/2018

PLOT SCALE: 39.9999 sf / In.

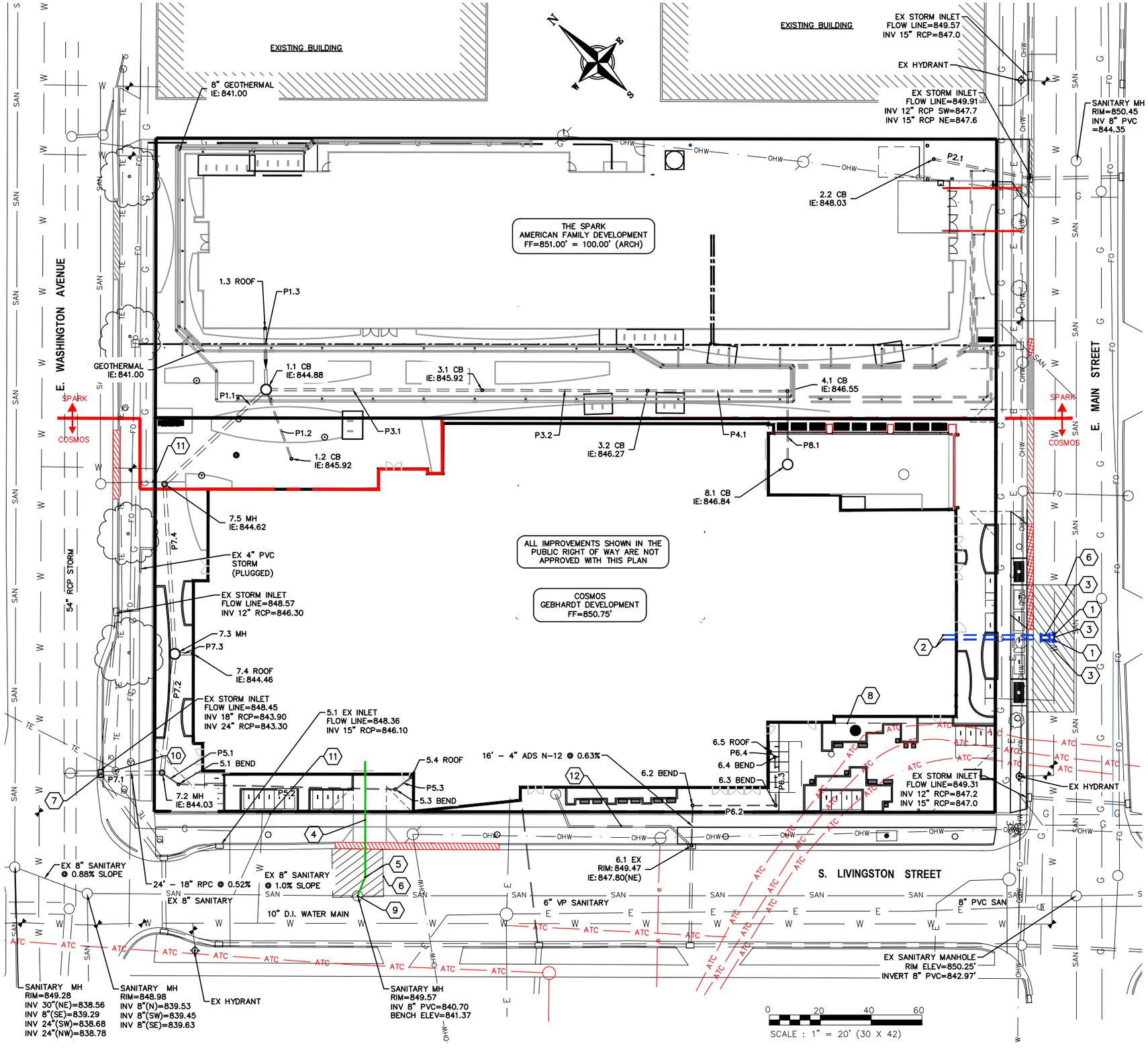

PLAN KEY

1. CONNECT TO EXISTING WATER MAIN WITH 8"X8"X8" CUT-IN TEE. COORDINATE INSTALLATION WITH MADISON WATER UTILITY
2. 8" WATER SERVICE
3. 8" VALVE
4. 8" SANITARY LATERAL @ 0.52% MIN. SLOPE
5. 22.5° BEND
6. UTILITY PATCH PER CITY REQUIREMENTS
7. CONNECT TO EXISTING STORM SEWER INLET PER CITY STANDARDS
8. EXCEPTION 10: 35'X85' PERPETUAL RIGHT AND EASEMENT FOR UNDERGROUND ELECTRIC TRANSMISSION AND DISTRIBUTION IN DOC. NO. 2070527.
9. CONNECT TO EX SANITARY MANHOLE PER CITY REQUIREMENTS, INVERT=841.40
10. INSTALL STORM UNDER TRAFFIC ENGINEERING VAULT
11. EXISTING SANITARY LATERAL PLUGGED AT PROPERTY LINE
12. REMOVE EXISTING STORM SEWER

UTILITY NOTES

1. CONTRACTOR SHALL CALL DIGGERS HOTLINE PRIOR TO ANY CONSTRUCTION. ALL EXISTING UTILITIES SHOWN ON THE PLAN ARE APPROXIMATE AND WERE FIELD LOCATED FROM GROUND MARKING OR BASED OFF OF CITY UTILITY RECORDS. THE LOCATIONS ARE SHOWN FOR INFORMATIONAL PURPOSES ONLY AND SHOULD BE FIELD VERIFIED PRIOR TO CONSTRUCTION.
2. ALL SITE UTILITY WORK SHALL BE DONE IN ACCORDANCE WITH THE CITY STANDARD SPECIFICATIONS FOR PUBLIC WORKS CONSTRUCTION, LATEST ADDITION.
3. CONTRACTOR SHALL OBTAIN ALL NECESSARY PLUGGING/CONNECTION PERMITS FROM THE CITY PRIOR TO ANY UTILITY WORK. CONTRACTOR TO NOTIFY THE PUBLIC WORKS DEPARTMENT A MINIMUM OF 48 HOURS BEFORE CONNECTING TO PUBLIC UTILITIES.
4. PRIOR TO CONSTRUCTION, CONTRACTOR SHALL OBTAIN A STREET OPENING PERMIT FOR ANY WORK TO BE DONE WITHIN THE RIGHT-OF-WAY.
5. RESTORATION OF PAVEMENT, CURB & GUTTER, AND SIDEWALK WITHIN THE STREET RIGHT OF WAY IS CONSIDERED INCIDENTAL AND SHALL BE INCLUDED IN THE COST OF THE UNDERGROUND IMPROVEMENTS.
6. ALL STORM SEWER PIPE TO BE SDR-35 PVC OR SCHEDULE 40 PVC AS NOTED.
7. CONTRACTOR SHALL CONFIRM CONNECTION ELEVATION GRADES OF ALL PIPES PRIOR TO BEGINNING CONSTRUCTION.
8. WATER MAIN SHALL BE DUCTILE IRON, CLASS 52.
9. SANITARY SEWER SERVICES SHALL BE SDR-35 PVC.
10. ANY PERSON WHO INSTALLS A NONCONDUCTIVE WATER OR SEWER LATERAL MUST ALSO INSTALL A LOCATION WIRE OR OTHER EQUALLY EFFECTIVE MEANS FOR MARKING THE LOCATION OF THE LATERAL. METHOD SHALL BE APPROVED BY THE CITY.
11. CONTRACTOR TO COORDINATE NEW, RELOCATED AND/OR ABANDONED GAS, ELECTRIC, TELEPHONE, AND CABLE WITH APPROPRIATE UTILITY COMPANIES.
12. UTILITIES SERVING PROPOSED BUILDINGS SHALL BE STUBBED INTO THE PROPOSED BUILDING(S) A MIN. OF 5' AND STAKED.
13. ALL WATER MAIN PIPE AND FITTINGS SHALL BE INSTALLED TO A MIN. DEPTH OF COVER OF 6.5'. AFTER REGRADING, EXISTING WATER MAIN PIPE WHICH DOES NOT MEET THIS REQUIREMENT SHALL BE INSULATED.
14. STORM SEWERS WHICH CROSS AN ACTIVE SEWER OR WATER MAIN OR LATERAL SHALL HAVE A MINIMUM CLEAR VERTICAL CLEARANCE OF THREE (3) FEET. CROSSINGS WITH LESSER VERTICAL CLEARANCE SHALL BE PROTECTED FROM FROST DAMAGE BY PLACEMENT OF 2-INCH THICK POLYSTYRENE BOARD INSULATION.
15. BUILDING PLUMBER SHALL VERIFY SIZE, SLOPE, AND EXACT LOCATION OF PROPOSED SANITARY LATERALS AND WATER SERVICES PRIOR TO INSTALLATION.

WISCONSIN
ROXANNE J. JOHNSON
E33981
WAUNAKEE, WI
PROFESSIONAL ENGINEER
8-1-17

STRANG
6411 Mineral Point Road
Madison, WI 53705
(608) 276 - 9200

PROFESSIONAL ENGINEERING LLC
818 N Meadowbrook Ln
Waunakee, WI 53597
(608) 849-9378

PROJECT INFORMATION

THE COSMOS

811 E WASHINGTON AVE
MADISON, WI

GEBHARDT DEVELOPMENT

ISSUANCE AND REVISIONS

City Plan

#	DATE	DESCRIPTION

SHEET INFORMATION

PROJECT MANAGER	RJ
PROJECT NUMBER	1249
DATE	8/1/17

UTILITY PLAN

C400