HILLCREST/UPLAND PROJECT NO. 53W0754	SHEET NO. P-1
CONCEPTUAL PLAN - OPTION 1	
OPTION 1	CITY OF MADISON

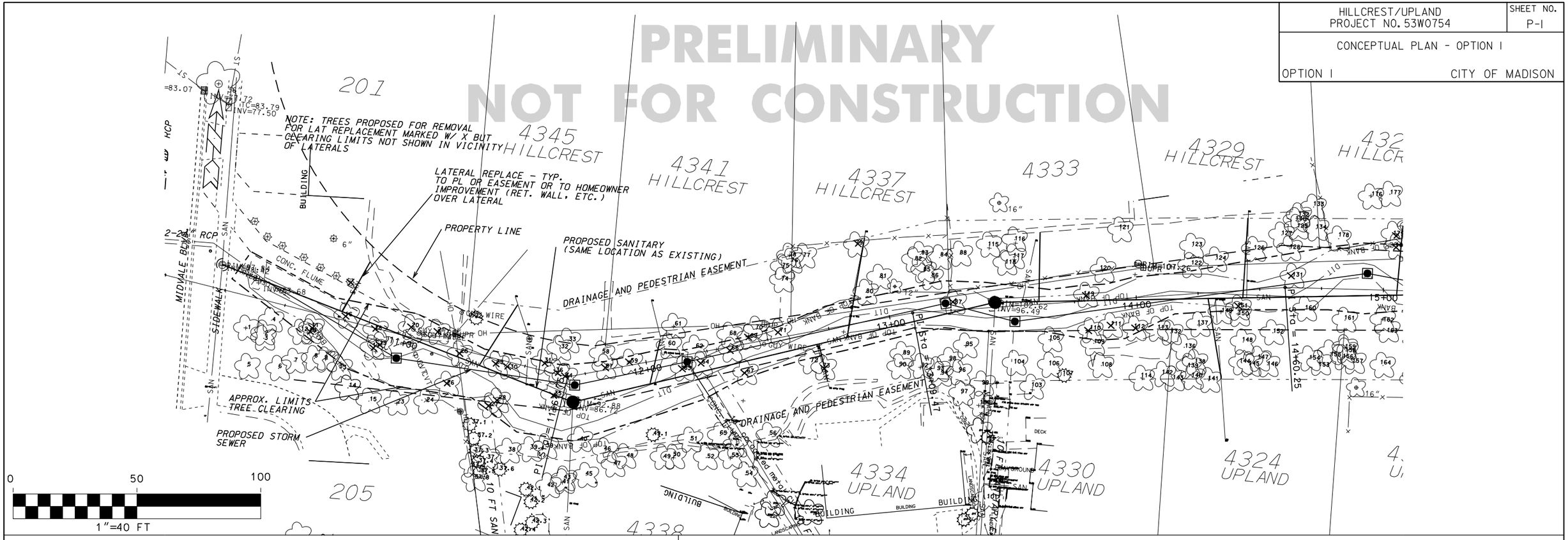

OPTION 1

- REPLACE SANITARY SEWER (LOWER EASTERN PORTION)
- INSTALL STORM SEWER PIPE
- REPLACE LATERALS WITHIN EASEMENT

TYPICAL SECTION

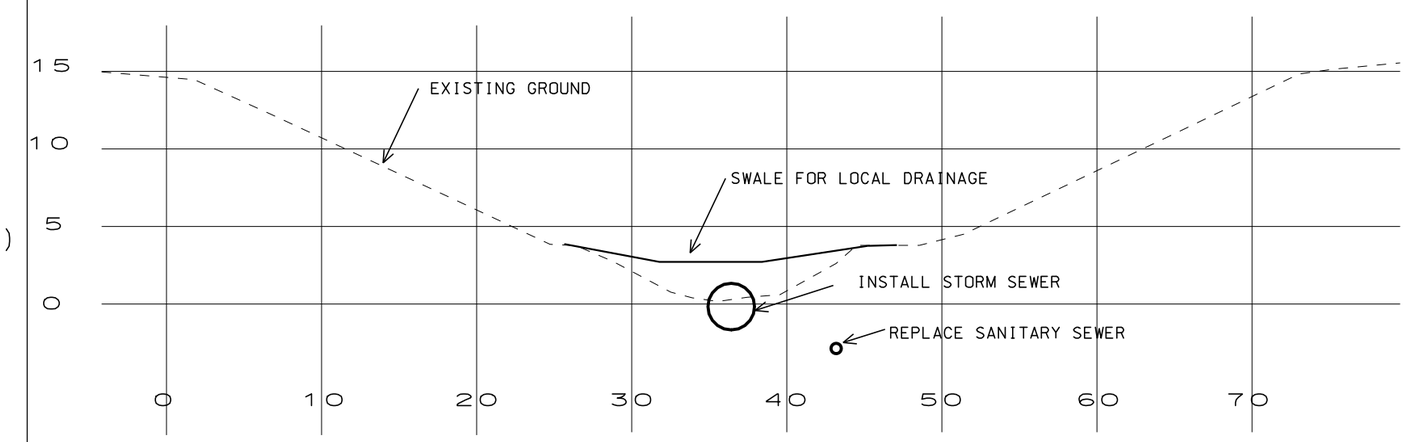

PLOT SCALE: ---------
PLOT NAME: ---------
REV. DATE: ---------
ORIGINATOR: CITY_OF_MADISON_STREETS_DIVISION

FILE NAME: M:\DESIGN\SEWER\DGN\53W0754\OPT1HANDOUTP1.DGN

DATE: 11/17/2009

HILLCREST/UPLAND PROJECT NO. 53W0754	SHEET NO. P-2
CONCEPTUAL PLAN - OPTION I	
OPTION I	CITY OF MADISON

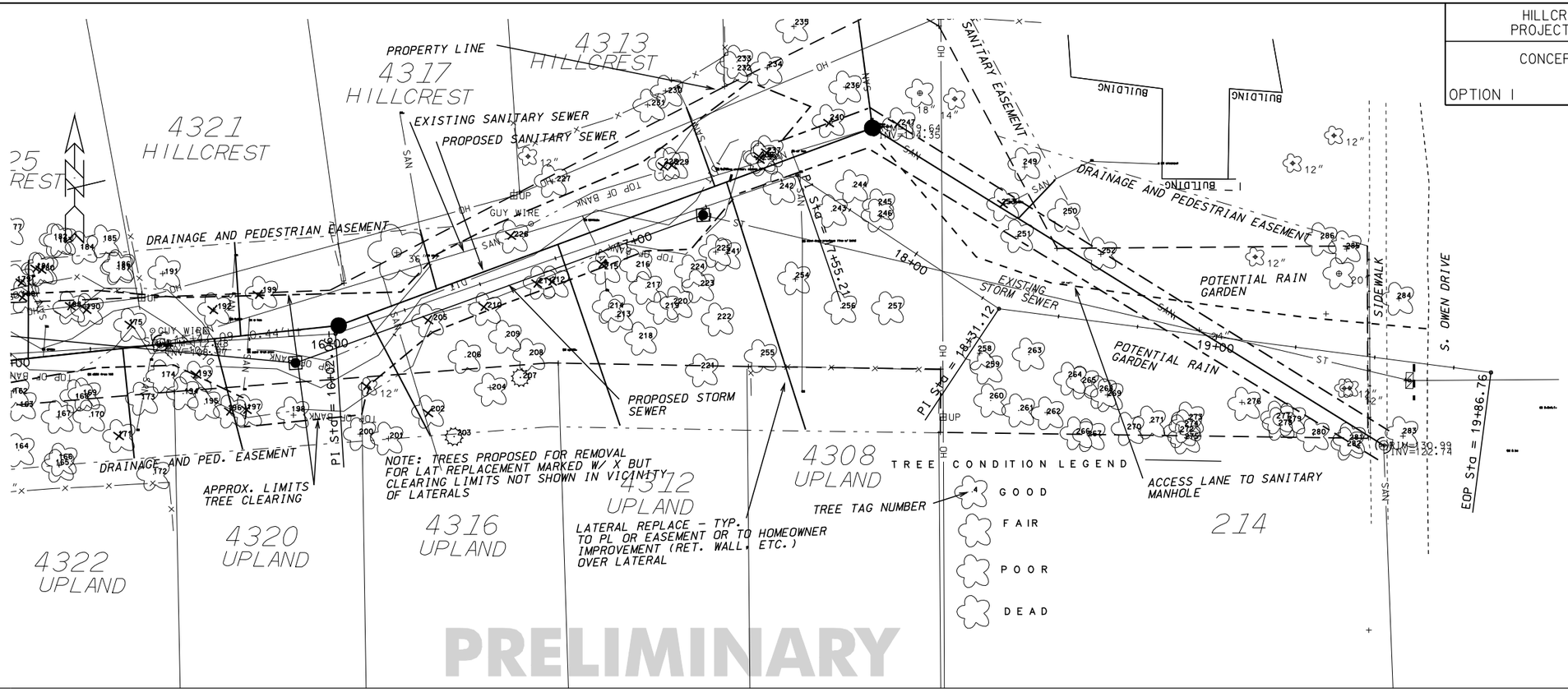

PRELIMINARY
NOT FOR CONSTRUCTION

PLOT SCALE: ---------
PLOT NAME: ---------
REV. DATE: ---------
ORIGINATOR: CITY_OF_MADISON.STREETS_DIVISION

FILE NAME: M:\DESIGN\SEWER\DGN\53W0754\OPT1HANDOUTP2.DGN DATE: 11/17/2009