REVISION #1 04-10-2025
REVISED SHEETS: TITLE, P1,P7, X1-X4, X11-X12 (ADDED)

# CITY OF MADISON
## CITY ENGINEERING DIVISION
## DEPARTMENT OF PUBLIC WORKS
# PLAN OF PROPOSED IMPROVEMENT

## NORTH SHORE DR PATH
## &
## EAST MADISON BIKEWAYS: SAFE STREETS

CITY PROJECT NO. 15104 - NORTH SHORE DR PATH

CITY PROJECT NO. 15327 - EAST MADISON BIKEWAYS: SAFE STREETS

CONTRACT NO. 8769

PUBLIC IMPROVEMENT PROJECT APPROVED

NOVEMBER 26, 2024

BY THE COMMON COUNCIL OF MADISON, WISCONSIN

PUBLIC IMPROVEMENT DESIGN APPROVED BY:

Jan 17, 2025

City Engineer Date

INDEX OF SHEETS


| | | |
|---|---|---|
| SHEET NO. | D1-D2 | TYPICAL SECTIONS |
| SHEET NO. | EC1-EC3 | NORTH SHORE DR PATH - EROSION CONTROL PLANS |
| SHEET NO. | EC4-EC6 | EAST MADISON BIKEWAYS - EROSION CONTROL PLANS |
| SHEET NO. | P1-P3 | NORTH SHORE DR PATH - PLAN & PROFILES |
| SHEET NO. | P4 | WINNEBAGO PATH - PLAN & PROFILES |
| SHEET NO. | P5-P6 | E WASH WIDENED SIDEWALK - PLAN & PROFILES |
| SHEET NO. | P7 | N FIRST WIDENED SIDEWALK - PLAN & PROFILES |
| SHEET NO. | U1-U3 | NORTH SHORE DR PATH - UTILITY PLAN & PROFILES |
| SHEET NO. | U4-U5 | E WASH WIDENED SIDEWALK - UTILITY PLAN & PROFILES |
| SHEET NO. | U6 | NORTH SHORE DR PATH - STORM SEWER SCHEDULE |
| SHEET NO. | U7 | EAST MADISON BIKEWAYS - STORM SEWER SCHEDULE |
| SHEET NO. | E1 | E WASH WIDENED SIDEWALK - ELECTRICAL PLAN |
| SHEET NO. | M1-M2 | NORTH SHORE DR PATH - PAVEMENT MARKINGS |
| SHEET NO. | M3-M21 | EAST MADISON BIKEWAYS - PAVEMENT MARKINGS |
| SHEET NO. | X1-X6 | NORTH SHORE DR PATH - CROSS SECTIONS |
| SHEET NO. | X7 | WINNEBAGO PATH - CROSS SECTIONS |
| SHEET NO. | X8-X10 | E WASH WIDENED SIDEWALK - CROSS SECTIONS |
| SHEET NO. | X11 | N FIRST WIDENED SIDEWALK - CROSS SECTIONS |
| SHEET NO. | MN1-MN3 | MAINTENANCE PLANS (CITY USE ONLY) |


CONVENTIONAL SIGNS
FIELD VERIFY ALL UTILITY LOCATIONS

| | |
|---|---|
| GAS | G |
| STORM SEWER | ST |
| SANITARY SEWER | SN |
| WATER | W |
| BURIED ELECTRIC | E |
| OVERHEAD ELECTRIC | OH |
| POWER POLE | |
| ADA COMPLIANT RAMP W/ DETECTABLE WARNING FIELD | |
| COMBUSTIBLE FLUIDS | |

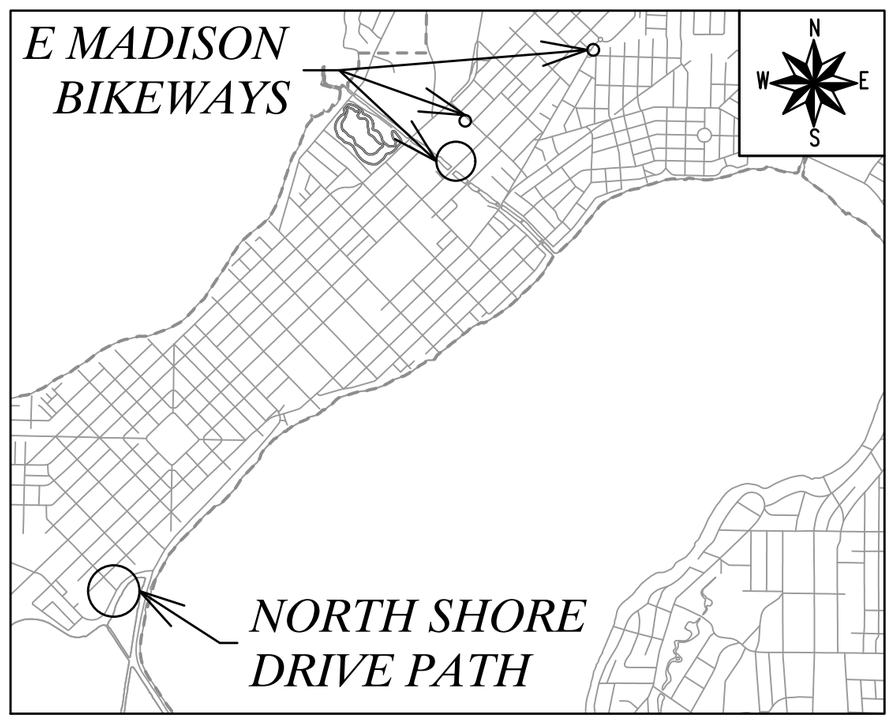


STREET & PATH DESIGNED BY:

WISCONSIN AARON J. CANTON E-100133 MADISON WI PROFESSIONAL ENGINEER

Jan 17, 2025

ELECTRICAL DESIGNED BY:

WISCONSIN GRETCHEN M AVILES PINEIRO E-47473 MADISON WI PROFESSIONAL ENGINEER

Jan 17, 2025

STORM SEWER DESIGNED BY:

WISCONSIN GREGORY T. FRIES E-30656 MADISON WI PROFESSIONAL ENGINEER

Jan 17, 2025

PAVEMENT MARKINGS & TRAFFIC CONTROL DESIGNED BY:

WISCONSIN SEAN D MALLOY E-48326 MADISON WI PROFESSIONAL ENGINEER

Jan 17, 2025

NOTES:

- ALL GUTTERS SHALL DRAIN WITH A MINIMUM GRADE OF 0.50% TOWARD STORM SEWER INLETS.
- SIDEWALK RAMPS SHALL HAVE A MAXIMUM SLOPE OF 1" PER 12". SIDEWALK AND CURB RAMPS SHALL BE CONSTRUCTED WITH A SIDE SLOPE OF 2.00%. SIDEWALK SHALL HAVE A MINIMUM LONGITUDINAL SLOPE OF 0.50% AND A MAXIMUM LONGITUDINAL SLOPE OF 5.00% EXCEPT WHERE STREET GRADES EXCEED 5.00%.

NORTH SHORE DR PATH - EARTH WORK SUMMARY:

| | |
|---|---|
| EXCAVATION CUT (MEASURED PLAN QUANTITY) | = 670 C.Y. |
| ESTIMATED UNDISTRIBUTED UNDERCUT | = 80 C.Y. |
| TOTAL UNCLASSIFIED EXCAVATION CUT | = 750 C.Y. |

EAST MADISON BIKEWAYS - EARTH WORK SUMMARY:

| | |
|---|---|
| EXCAVATION CUT (MEASURED PLAN QUANTITY) | = 490 C.Y. |
| ESTIMATED UNDISTRIBUTED UNDERCUT | = 50 C.Y. |
| TOTAL UNCLASSIFIED EXCAVATION CUT | = 540 C.Y. |

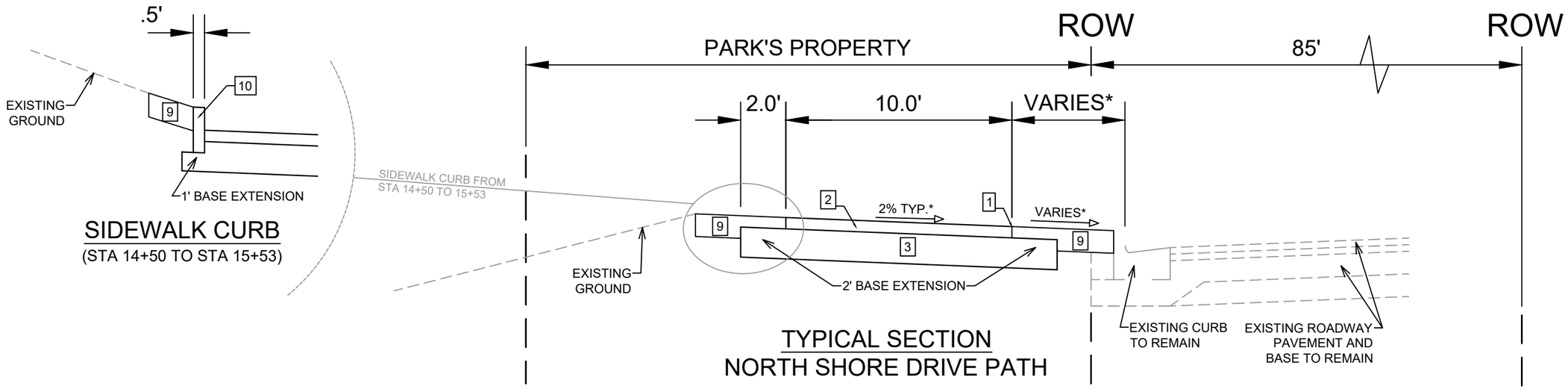


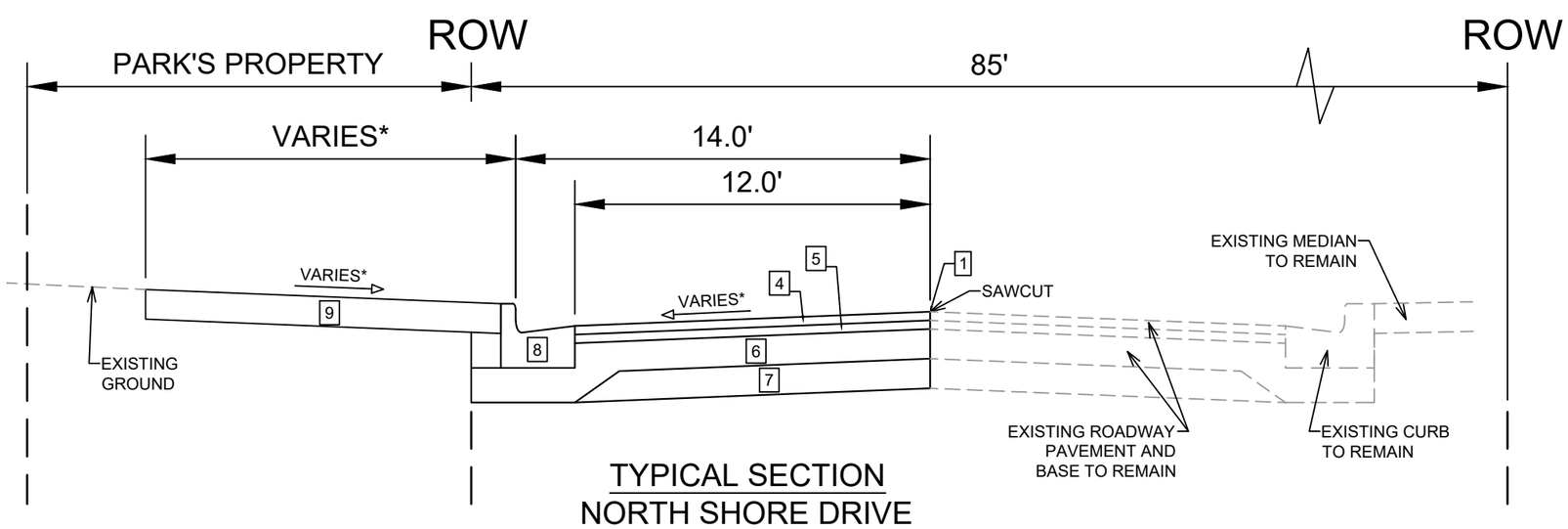


NOTES:

* SEE X-SHEETS FOR DIMENSIONING AND CROSS SLOPES

1. POINT REFERRED TO ON PROFILE
2. 3" HMA PAVEMENT- TYPE 4 LT 58-28 S
3. 8" GRADATION 2 CRUSHED AGGREGATE BASE COURSE
4. 2" HMA PAVEMENT- TYPE 4 MT 58-28 S
5. 3.5" HMA PAVEMENT- TYPE 3 MT 58-28 S
6. 6" GRADATION 2 CRUSHED AGGREGATE BASE COURSE
7. 6" GRADATION 1 CRUSHED AGGREGATE BASE COURSE
8. TYPE 'A' CONCRETE CURB AND GUTTER
9. 6" TOPSOIL, SEED, & MAT
10. SIDEWALK CURB

| MARK | REVISION | DATE | BY |
|---|---|---|---|
| --- | --- | --- | --- |
| --- | --- | --- | --- |
| --- | --- | --- | --- |
| --- | --- | --- | --- |

Designed By: AJC Date: 11/4/2024 4:49 PM Scale: 1:5

15104 D-1

15104

MADISON, WI

CONTRACT NO: 8769

TYPICAL SECTIONS

NORTH SHORE DR PATH

M:\DESIGN\Projects\15104\CAD\Streets\15104EN-Details.dwg

15104

D-1

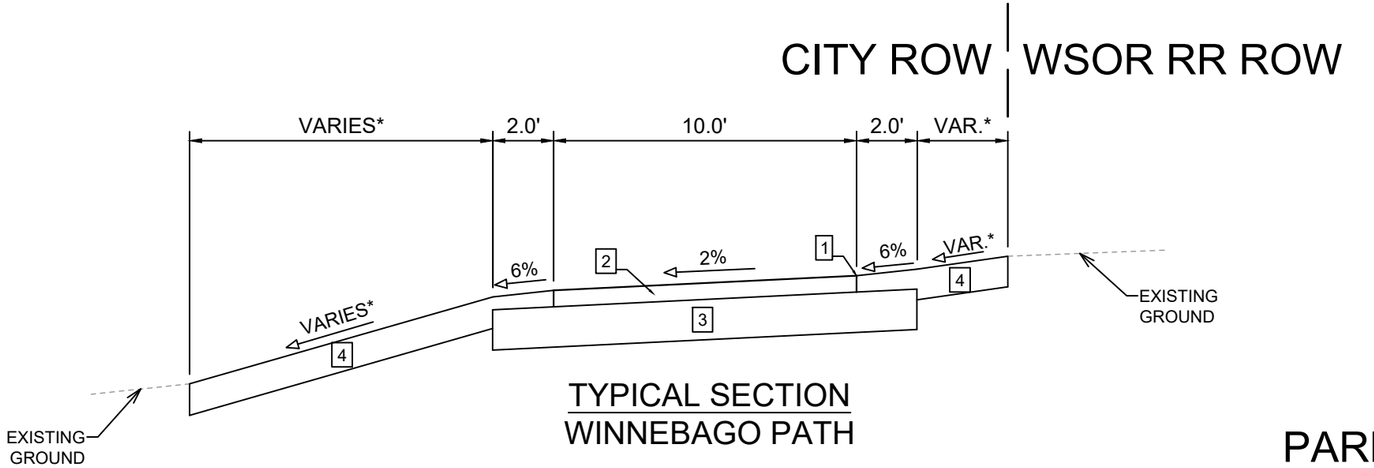


TYPICAL SECTION
WINNEBAGO PATH

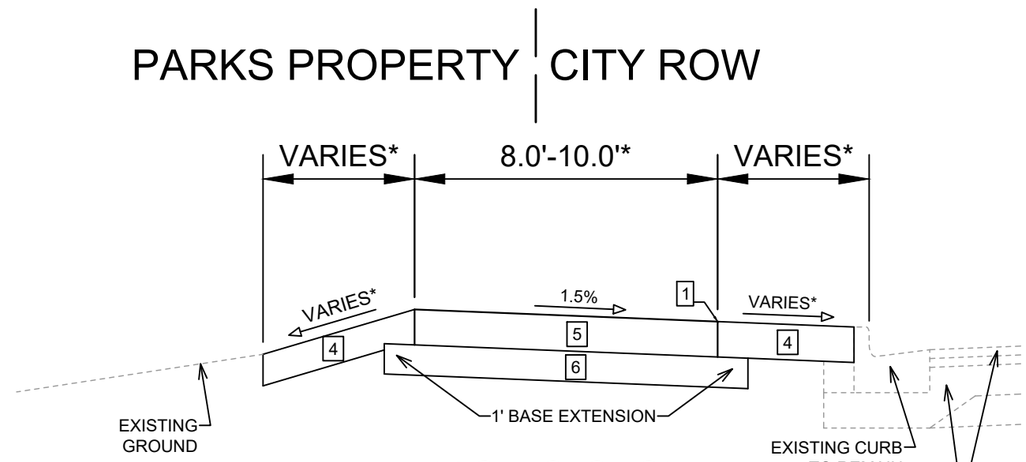


TYPICAL SECTION
E WASHINGTON AVE
SIDEWALK WIDENING

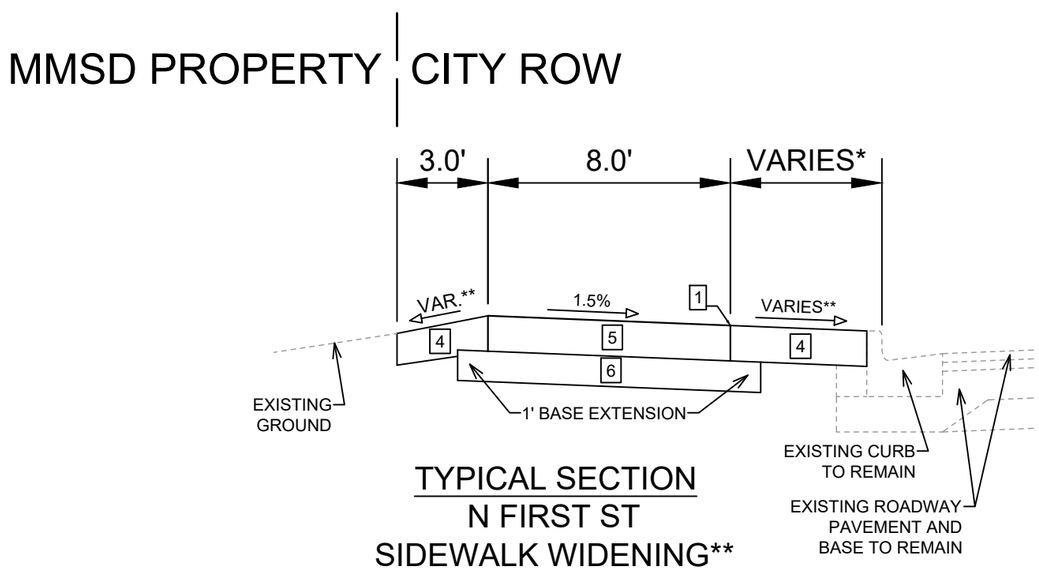


TYPICAL SECTION
N FIRST ST
SIDEWALK WIDENING**

1. POINT REFERRED TO ON PROFILE
2. 3" HMA PAVEMENT- TYPE 4 LT 58-28 S
3. 8" GRADATION 2 CRUSHED AGGREGATE BASE COURSE
4. 6" TOPSOIL, SEED, & MAT
5. 7" CONCRETE SIDEWALK, SAWED JOINTS
6. 6" GRADATION 2 CRUSHED AGGREGATE BASE COURSE

NOTES:

* SEE P-SHEETS AND X-SHEETS FOR DIMENSIONING AND CROSS SLOPES

** N FIRST ST SIDEWALK WIDENING GRADES AND CROSS-SECTIONS TO BE UPDATED WITH REVISION PRIOR TO START OF CONSTRUCTION

| MARK | REVISION | DATE | BY |
|---|---|---|---|
| --- | --- | --- | --- |
| --- | --- | --- | --- |
| --- | --- | --- | --- |
| --- | --- | --- | --- |

Designed By: AJC | Date: 12/4/2024 3:09 PM | Scale: 1:5 | D-2

15327

MADISON, WI

CONTRACT NO: 8769

TYPICAL SECTIONS

EAST MADISON BIKEWAYS: SAFE STREETS

\\Gisserver\data\DESIGN\Projects\15327\CAD\Streets\15327EN-Details.dwg

15327

D-2

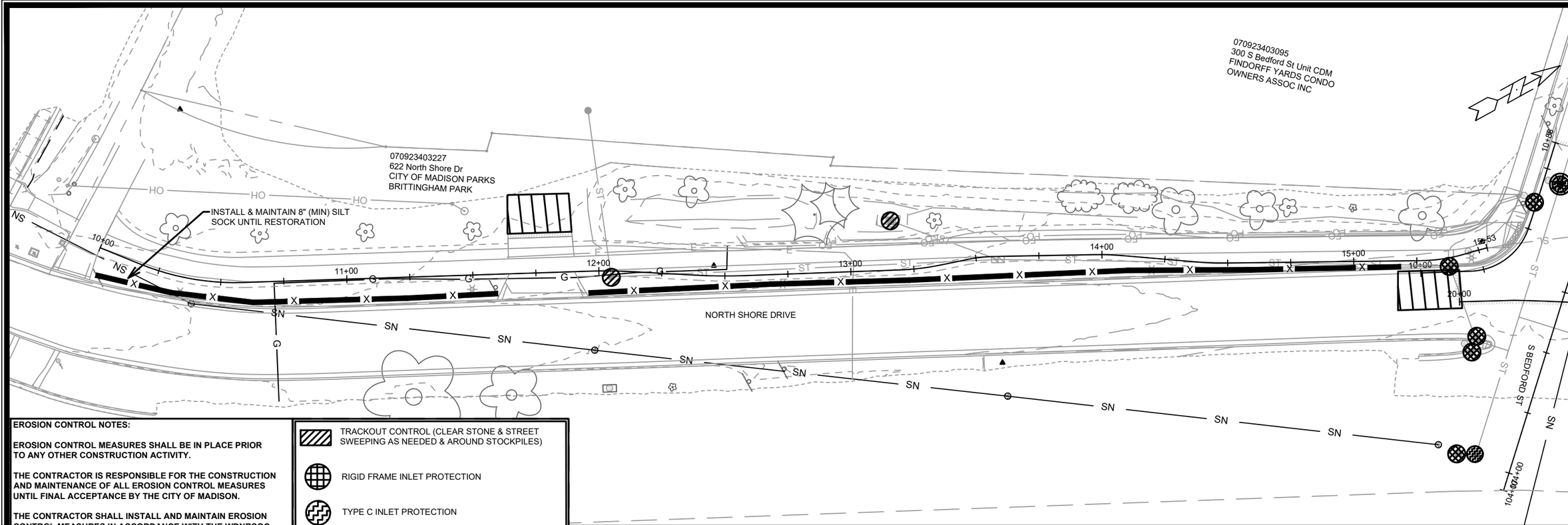


**EROSION CONTROL NOTES:**

**EROSION CONTROL MEASURES SHALL BE IN PLACE PRIOR TO ANY OTHER CONSTRUCTION ACTIVITY.**

**THE CONTRACTOR IS RESPONSIBLE FOR THE CONSTRUCTION AND MAINTENANCE OF ALL EROSION CONTROL MEASURES UNTIL FINAL ACCEPTANCE BY THE CITY OF MADISON.**

**THE CONTRACTOR SHALL INSTALL AND MAINTAIN EROSION CONTROL MEASURES IN ACCORDANCE WITH THE WDNRSOC STANDARDS AND CITY OF MADISON STANDARD SPECIFICATIONS.**

**THE CONTRACTOR SHALL PROVIDE STREET CLEANING AS NEEDED ON A DAILY BASIS TO KEEP TRACKING TO A MINIMUM.**

**INLET PROTECTION SHALL BE INSTALLED WITHIN THE CONSTRUCTION LIMITS. RIGID FRAME INLET PROTECTION SHALL ALSO BE INSTALLED WITHIN EXISTING INLETS AT THE INTERSECTION OF DANBURY STREET AND WARWICK WAY (SIX TOTAL). ADDITIONAL INLET PROTECTION SHALL BE PLACED AS DIRECTED.**

**POLYMER SHALL BE APPLIED TO DISTURBED AREAS AS DIRECTED BY THE CONSTRUCTION ENGINEER.**

- TRACKOUT CONTROL (CLEAR STONE & STREET SWEEPING AS NEEDED & AROUND STOCKPILES)
- RIGID FRAME INLET PROTECTION
- TYPE C INLET PROTECTION
- TYPE "A" INLET PROTECTION
- SILT SOCK (PLACE AS NEEDED & AROUND STOCKPILES)

TYPE C INLET PROTECTION MAY ONLY BE INSTALLED IF RIGID FRAME INLET PROTECTION WILL NOT FIT STRUCTURE.

- FABRIC FLAPS MUST BE CUT TO LEAVE LESS THAN 6" AROUND GRATE.
- 2"X4" MUST BE INSTALLED AND EXTEND BEYOND CURB OPENINGS.
- FILTER MUST BE SECURED WITH WIRE OR PLASTIC TIES.
- FILTER FABRIC MUST BE CLEARED OF DEBRIS AFTER EACH RAIN EVENT, OR WEEKLY AT A MINIMUM.

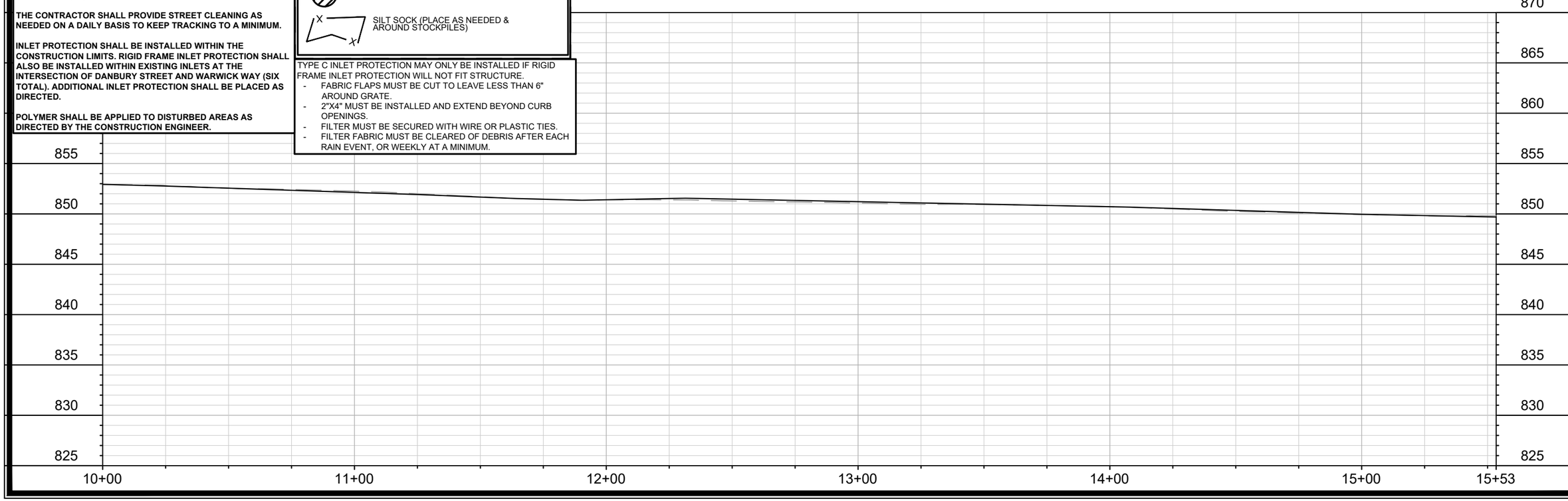


| MARK | REVISION | DATE | BY |
|---|---|---|---|
| --- | --- | --- | --- |
| --- | --- | --- | --- |
| --- | --- | --- | --- |
| --- | --- | --- | --- |
| --- | --- | --- | --- |

Designed By: AJC | Date: 1/16/2025 10:49 AM | Scale: 1" = 40'

15104

EC-1

15104

MADISON, WI

CONTRACT NO: 8769

EROSION CONTROL PLAN

NORTH SHORE DR PATH

M:\DESIGN\Projects\15104\CAD\Sewers\15104SWR-PipeNetwork.dwg

CITY OF MADISON WISCONSIN

15104

EC-1

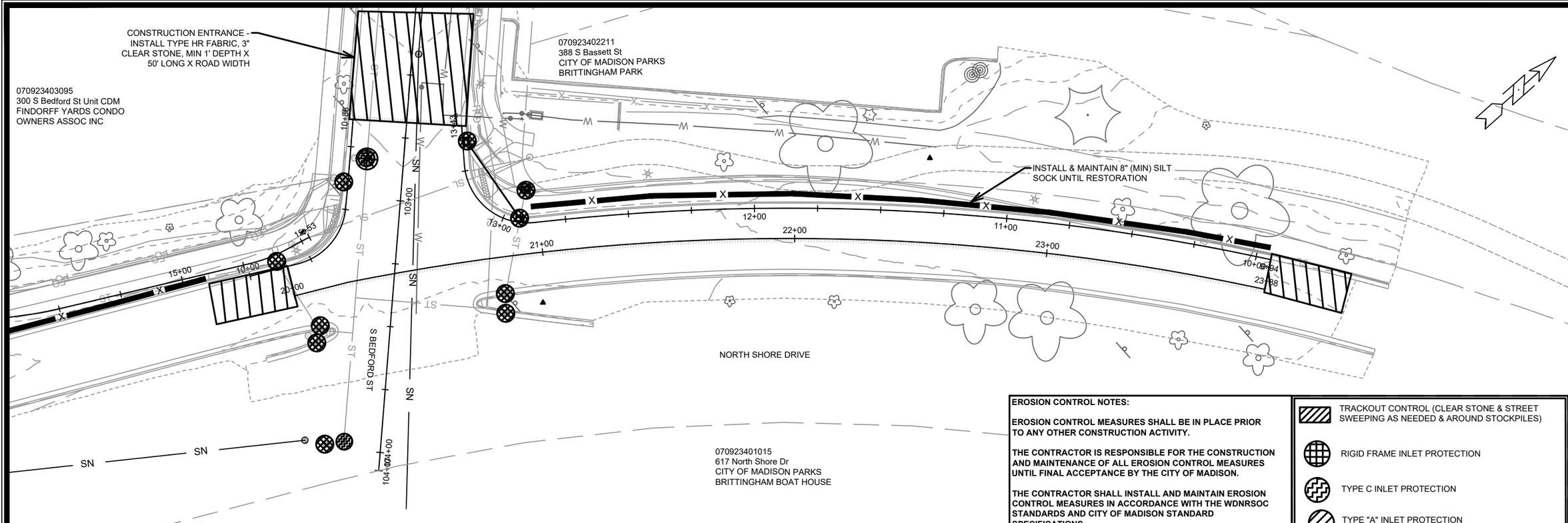


**EROSION CONTROL NOTES:**

**EROSION CONTROL MEASURES SHALL BE IN PLACE PRIOR TO ANY OTHER CONSTRUCTION ACTIVITY.**

**THE CONTRACTOR IS RESPONSIBLE FOR THE CONSTRUCTION AND MAINTENANCE OF ALL EROSION CONTROL MEASURES UNTIL FINAL ACCEPTANCE BY THE CITY OF MADISON.**

**THE CONTRACTOR SHALL INSTALL AND MAINTAIN EROSION CONTROL MEASURES IN ACCORDANCE WITH THE WDNRSOC STANDARDS AND CITY OF MADISON STANDARD SPECIFICATIONS.**

**THE CONTRACTOR SHALL PROVIDE STREET CLEANING AS NEEDED ON A DAILY BASIS TO KEEP TRACKING TO A MINIMUM.**

**INLET PROTECTION SHALL BE INSTALLED WITHIN THE CONSTRUCTION LIMITS. RIGID FRAME INLET PROTECTION SHALL ALSO BE INSTALLED WITHIN EXISTING INLETS AT THE INTERSECTION OF DANBURY STREET AND WARWICK WAY (SIX TOTAL). ADDITIONAL INLET PROTECTION SHALL BE PLACED AS DIRECTED.**

**POLYMER SHALL BE APPLIED TO DISTURBED AREAS AS DIRECTED BY THE CONSTRUCTION ENGINEER.**

TRACKOUT CONTROL (CLEAR STONE & STREET SWEEPING AS NEEDED & AROUND STOCKPILES)

RIGID FRAME INLET PROTECTION

TYPE C INLET PROTECTION

TYPE "A" INLET PROTECTION

SILT SOCK (PLACE AS NEEDED & AROUND STOCKPILES)

TYPE C INLET PROTECTION MAY ONLY BE INSTALLED IF RIGID FRAME INLET PROTECTION WILL NOT FIT STRUCTURE.

- FABRIC FLAPS MUST BE CUT TO LEAVE LESS THAN 6" AROUND GRATE.
- 2"X4" MUST BE INSTALLED AND EXTEND BEYOND CURB OPENINGS.
- FILTER MUST BE SECURED WITH WIRE OR PLASTIC TIES.
- FILTER FABRIC MUST BE CLEARED OF DEBRIS AFTER EACH RAIN EVENT, OR WEEKLY AT A MINIMUM.

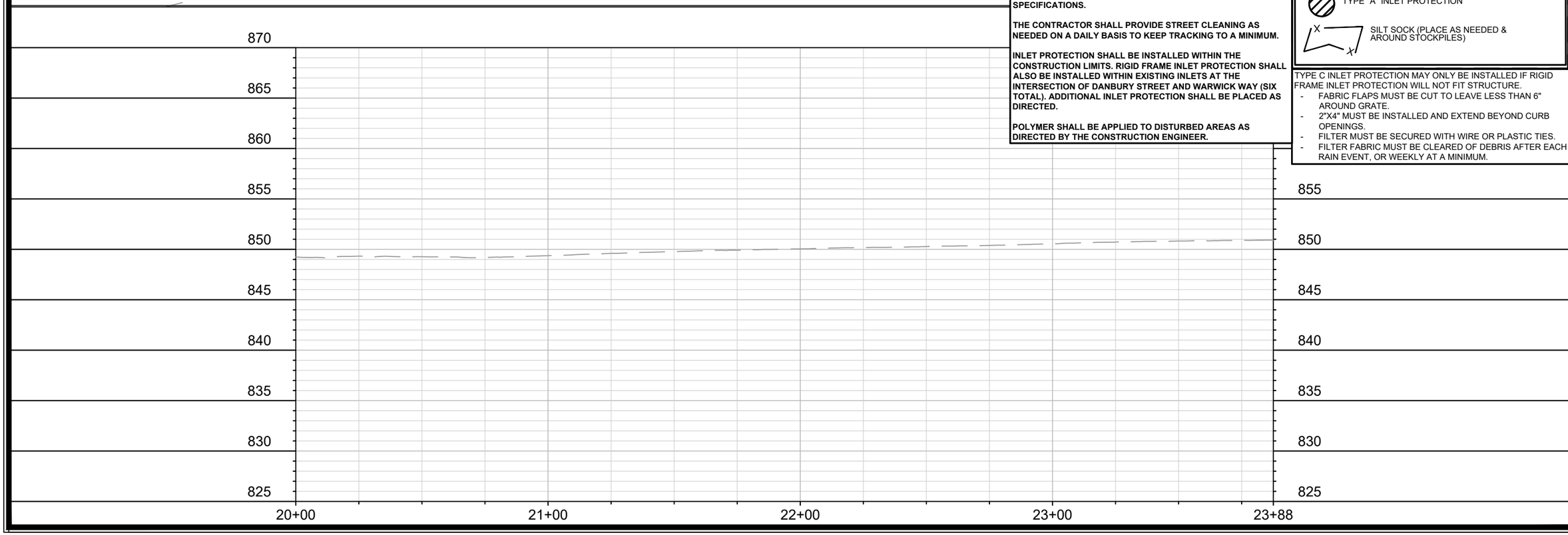


| MARK | REVISION | DATE | BY |
|---|---|---|---|
| --- | --- | --- | --- |
| --- | --- | --- | --- |
| --- | --- | --- | --- |
| --- | --- | --- | --- |
| --- | --- | --- | --- |

Designed By: AJC | Date: 1/16/2025 10:50 AM | Scale: 1" = 40'

15104

MADISON, WI

CONTRACT NO: 8769

EROSION CONTROL PLAN

NORTH SHORE DR PATH

M:\DESIGN\Projects\15104\CAD\Sewers\15104SWR-PipeNetwork.dwg

15104

EC-2

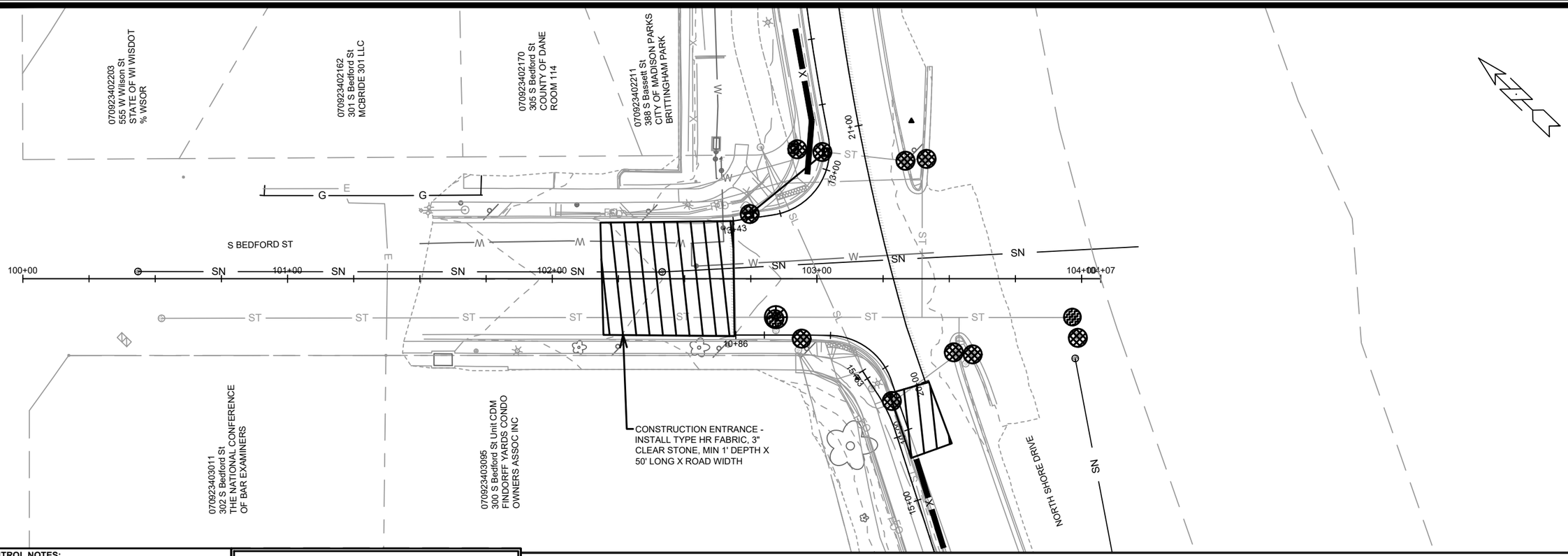


**EROSION CONTROL NOTES:**

**EROSION CONTROL MEASURES SHALL BE IN PLACE PRIOR TO ANY OTHER CONSTRUCTION ACTIVITY.**

**THE CONTRACTOR IS RESPONSIBLE FOR THE CONSTRUCTION AND MAINTENANCE OF ALL EROSION CONTROL MEASURES UNTIL FINAL ACCEPTANCE BY THE CITY OF MADISON.**

**THE CONTRACTOR SHALL INSTALL AND MAINTAIN EROSION CONTROL MEASURES IN ACCORDANCE WITH THE WDNRSOC STANDARDS AND CITY OF MADISON STANDARD SPECIFICATIONS.**

**THE CONTRACTOR SHALL PROVIDE STREET CLEANING AS NEEDED ON A DAILY BASIS TO KEEP TRACKING TO A MINIMUM.**

**INLET PROTECTION SHALL BE INSTALLED WITHIN THE CONSTRUCTION LIMITS. RIGID FRAME INLET PROTECTION SHALL ALSO BE INSTALLED WITHIN EXISTING INLETS AT THE INTERSECTION OF DANBURY STREET AND WARWICK WAY (SIX TOTAL). ADDITIONAL INLET PROTECTION SHALL BE PLACED AS DIRECTED.**

**POLYMER SHALL BE APPLIED TO DISTURBED AREAS AS DIRECTED BY THE CONSTRUCTION ENGINEER.**

TRACKOUT CONTROL (CLEAR STONE & STREET SWEEPING AS NEEDED & AROUND STOCKPILES)

RIGID FRAME INLET PROTECTION

TYPE C INLET PROTECTION

TYPE "A" INLET PROTECTION

SILT SOCK (PLACE AS NEEDED & AROUND STOCKPILES)

TYPE C INLET PROTECTION MAY ONLY BE INSTALLED IF RIGID FRAME INLET PROTECTION WILL NOT FIT STRUCTURE.

- FABRIC FLAPS MUST BE CUT TO LEAVE LESS THAN 6" AROUND GRATE.
- 2"X4" MUST BE INSTALLED AND EXTEND BEYOND CURB OPENINGS.
- FILTER MUST BE SECURED WITH WIRE OR PLASTIC TIES.
- FILTER FABRIC MUST BE CLEARED OF DEBRIS AFTER EACH RAIN EVENT, OR WEEKLY AT A MINIMUM.

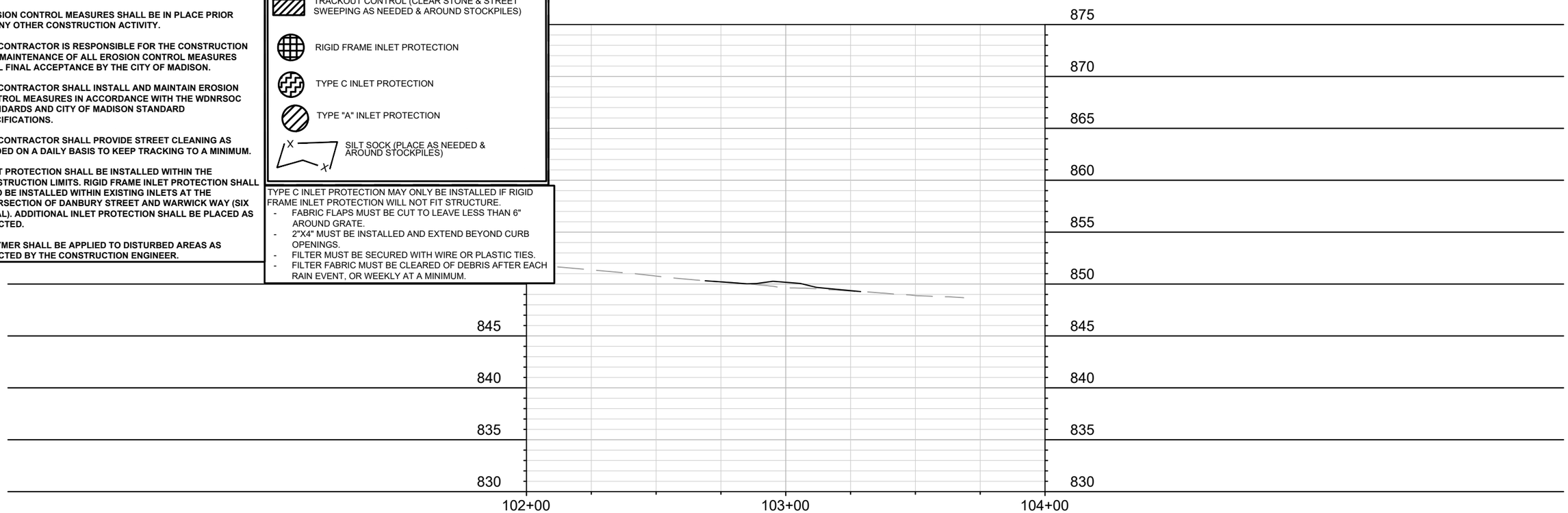


| MARK | REVISION | DATE | BY |
|---|---|---|---|
| --- | --- | --- | --- |
| --- | --- | --- | --- |
| --- | --- | --- | --- |
| --- | --- | --- | --- |
| --- | --- | --- | --- |

Designed By: AJC | Date: 1/16/2025 10:50 AM | Scale: 1" = 40'

15104

MADISON, WI

CONTRACT NO: 8769

EROSION CONTROL PLAN

NORTH SHORE DR PATH

M:\DESIGN\Projects\15104\CAD\Sewers\15104SWR-PipeNetwork.dwg

15104

EC-3

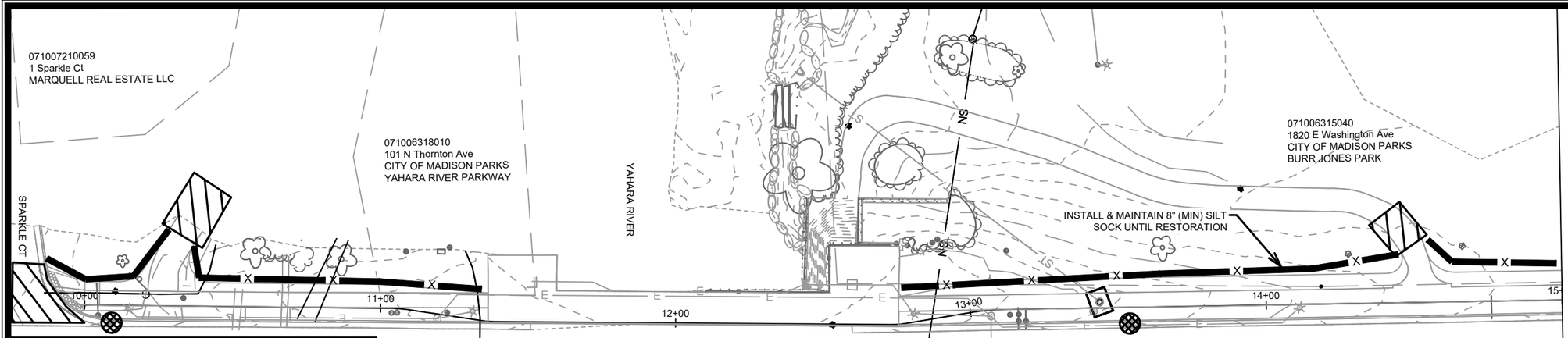


EROSION CONTROL NOTES:

EROSION CONTROL MEASURES SHALL BE IN PLACE PRIOR TO ANY OTHER CONSTRUCTION ACTIVITY.

THE CONTRACTOR IS RESPONSIBLE FOR THE CONSTRUCTION AND MAINTENANCE OF ALL EROSION CONTROL MEASURES UNTIL FINAL ACCEPTANCE BY THE CITY OF MADISON.

THE CONTRACTOR SHALL INSTALL AND MAINTAIN EROSION CONTROL MEASURES IN ACCORDANCE WITH THE WDNRSOC STANDARDS AND CITY OF MADISON STANDARD SPECIFICATIONS.

THE CONTRACTOR SHALL PROVIDE STREET CLEANING AS NEEDED ON A DAILY BASIS TO KEEP TRACKING TO A MINIMUM.

INLET PROTECTION SHALL BE INSTALLED WITHIN THE CONSTRUCTION LIMITS. ADDITIONAL INLET PROTECTION SHALL BE INSTALLED AS DIRECTED.

POLYMER SHALL BE APPLIED TO DISTURBED AREAS AS DIRECTED BY THE CONSTRUCTION ENGINEER.

TRACKOUT CONTROL (CLEAR STONE & STREET SWEEPING AS NEEDED & AROUND STOCKPILES)

RIGID FRAME INLET PROTECTION

TYPE "A" INLET PROTECTION

SILT SOCK (PLACE AS NEEDED & AROUND STOCKPILES)

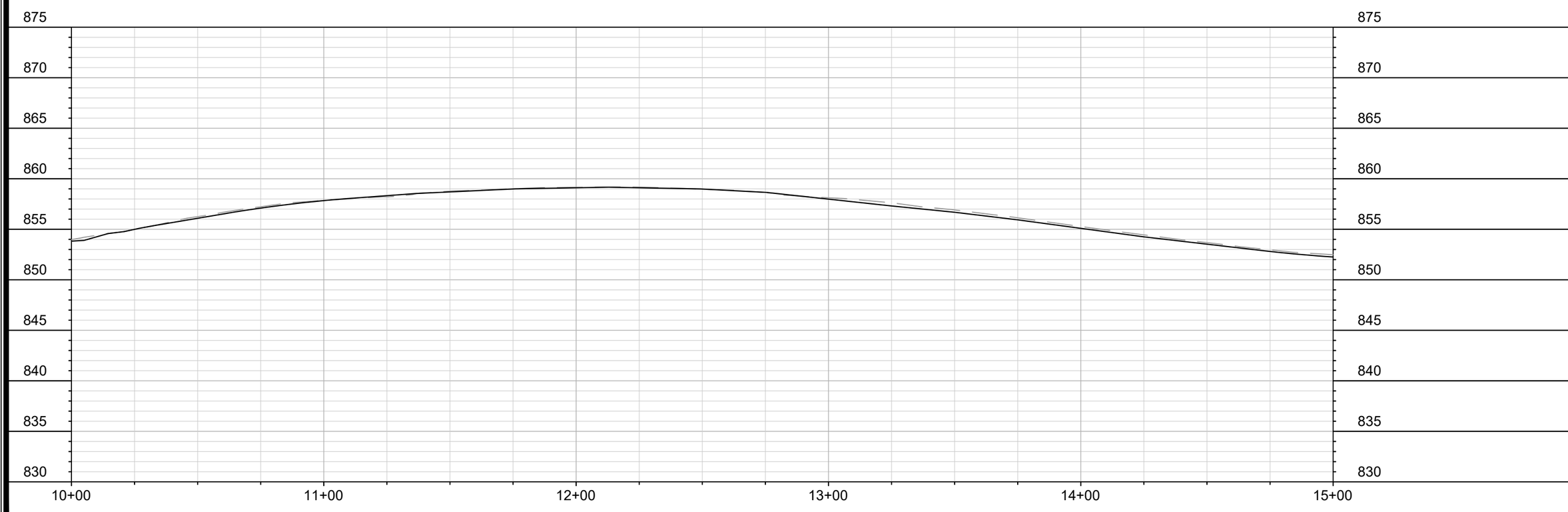


| MARK | REVISION | DATE | BY |
|---|---|---|---|
| --- | --- | --- | --- |
| --- | --- | --- | --- |
| --- | --- | --- | --- |
| --- | --- | --- | --- |
| --- | --- | --- | --- |

Designed By: AJC | Date: 1/16/2025 12:53 PM | Scale: 1" = 40'

15327 | 8769 | EC-4

15327

MADISON, WI

CONTRACT NO:

EROSION CONTROL PLAN

EAST MADISON BIKEWAYS: SAFE STREETS

M:\DESIGN\Projects\15327\CAD\Sewers\15327SWR-PipeNetwork.dwg

15327

EC-4

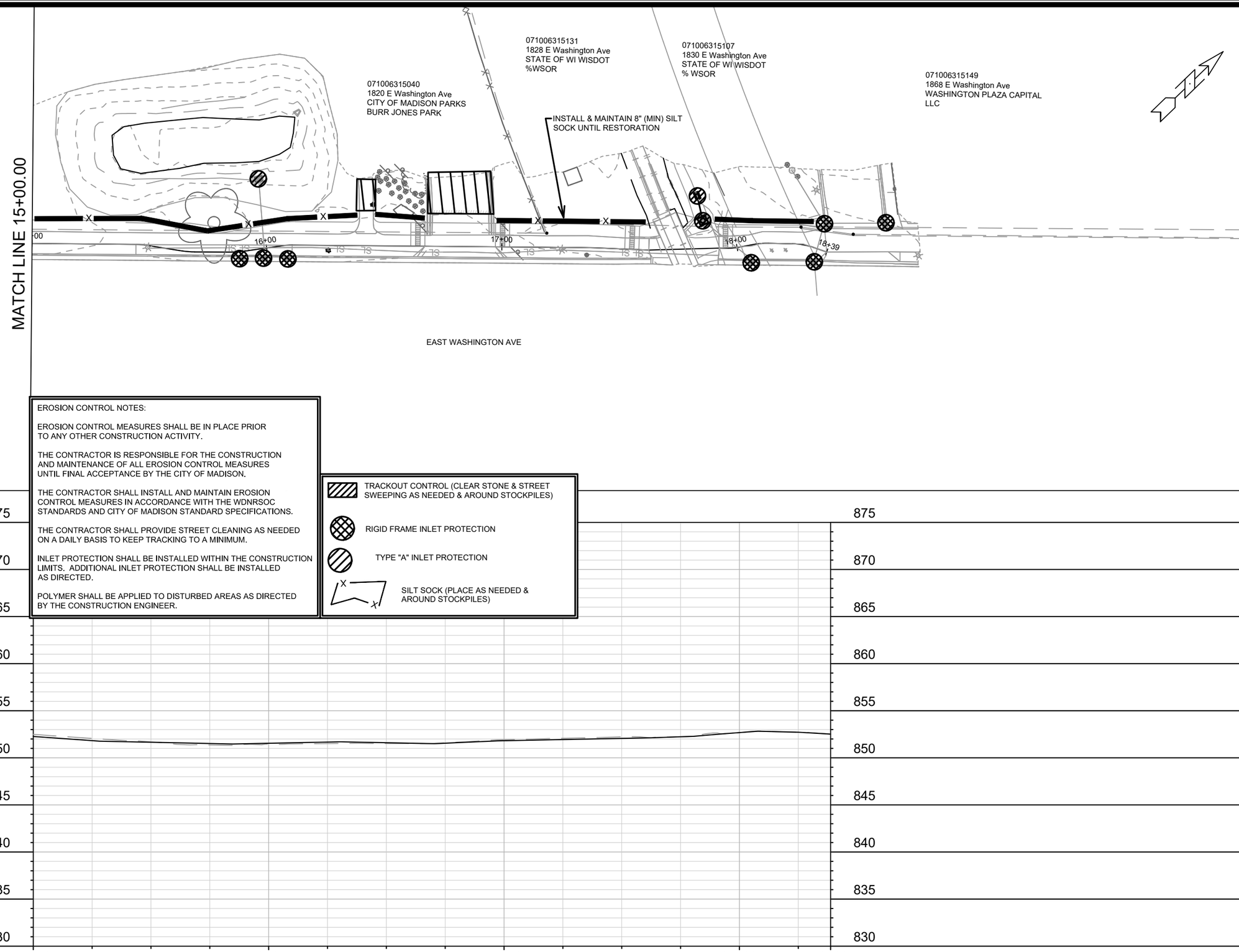


EROSION CONTROL NOTES:

EROSION CONTROL MEASURES SHALL BE IN PLACE PRIOR TO ANY OTHER CONSTRUCTION ACTIVITY.

THE CONTRACTOR IS RESPONSIBLE FOR THE CONSTRUCTION AND MAINTENANCE OF ALL EROSION CONTROL MEASURES UNTIL FINAL ACCEPTANCE BY THE CITY OF MADISON.

THE CONTRACTOR SHALL INSTALL AND MAINTAIN EROSION CONTROL MEASURES IN ACCORDANCE WITH THE WDNRSOC STANDARDS AND CITY OF MADISON STANDARD SPECIFICATIONS.

THE CONTRACTOR SHALL PROVIDE STREET CLEANING AS NEEDED ON A DAILY BASIS TO KEEP TRACKING TO A MINIMUM.

INLET PROTECTION SHALL BE INSTALLED WITHIN THE CONSTRUCTION LIMITS. ADDITIONAL INLET PROTECTION SHALL BE INSTALLED AS DIRECTED.

POLYMER SHALL BE APPLIED TO DISTURBED AREAS AS DIRECTED BY THE CONSTRUCTION ENGINEER.

TRACKOUT CONTROL (CLEAR STONE & STREET SWEEPING AS NEEDED & AROUND STOCKPILES)

RIGID FRAME INLET PROTECTION

TYPE "A" INLET PROTECTION

SILT SOCK (PLACE AS NEEDED & AROUND STOCKPILES)

| MARK | REVISION | DATE | BY |
|---|---|---|---|
| --- | --- | --- | --- |
| --- | --- | --- | --- |
| --- | --- | --- | --- |
| --- | --- | --- | --- |

Designed By: AJC | Date: 1/16/2025 12:54 PM | Scale: 1" = 40'

15327

MADISON, WI

CONTRACT NO: 8769

EROSION CONTROL PLAN

EAST MADISON BIKEWAYS: SAFE STREETS

M:\DESIGN\Projects\15327\CAD\Sewers\15327SWR-PipeNetwork.dwg

15327

EC-5

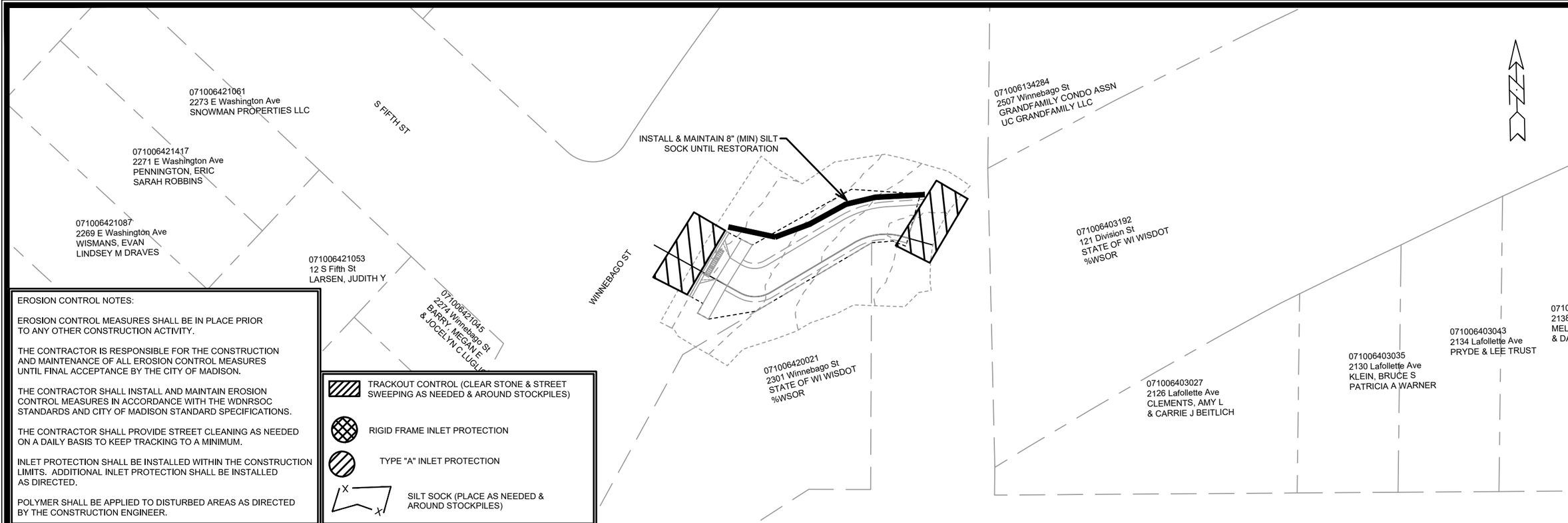


EROSION CONTROL NOTES:

EROSION CONTROL MEASURES SHALL BE IN PLACE PRIOR TO ANY OTHER CONSTRUCTION ACTIVITY.

THE CONTRACTOR IS RESPONSIBLE FOR THE CONSTRUCTION AND MAINTENANCE OF ALL EROSION CONTROL MEASURES UNTIL FINAL ACCEPTANCE BY THE CITY OF MADISON.

THE CONTRACTOR SHALL INSTALL AND MAINTAIN EROSION CONTROL MEASURES IN ACCORDANCE WITH THE WDNRSOC STANDARDS AND CITY OF MADISON STANDARD SPECIFICATIONS.

THE CONTRACTOR SHALL PROVIDE STREET CLEANING AS NEEDED ON A DAILY BASIS TO KEEP TRACKING TO A MINIMUM.

INLET PROTECTION SHALL BE INSTALLED WITHIN THE CONSTRUCTION LIMITS. ADDITIONAL INLET PROTECTION SHALL BE INSTALLED AS DIRECTED.

POLYMER SHALL BE APPLIED TO DISTURBED AREAS AS DIRECTED BY THE CONSTRUCTION ENGINEER.

TRACKOUT CONTROL (CLEAR STONE & STREET SWEEPING AS NEEDED & AROUND STOCKPILES)

RIGID FRAME INLET PROTECTION

TYPE "A" INLET PROTECTION

SILT SOCK (PLACE AS NEEDED & AROUND STOCKPILES)

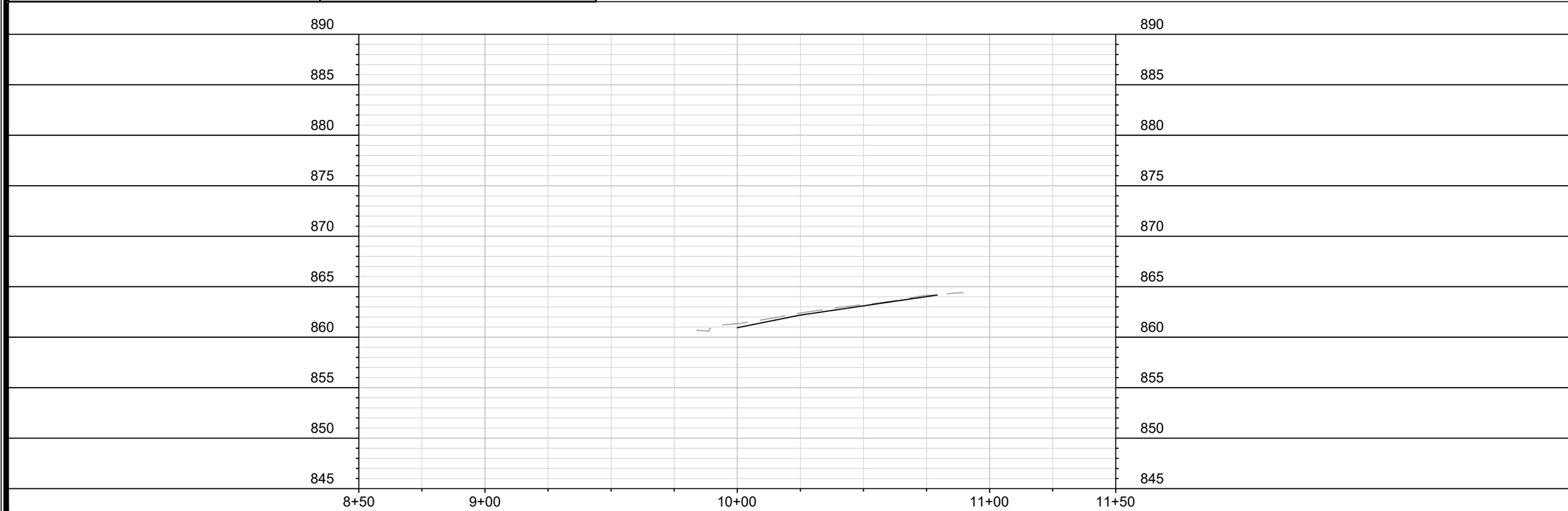


| MARK | REVISION | DATE | BY |
|---|---|---|---|
| --- | --- | --- | --- |
| --- | --- | --- | --- |
| --- | --- | --- | --- |
| --- | --- | --- | --- |
| --- | --- | --- | --- |

Designed By: AJC | Date: 1/16/2025 12:55 PM | Scale: 1" = 40'

15327 | EC-6

15327

MADISON, WI

CONTRACT NO: 8769

EROSION CONTROL PLAN

EAST MADISON BIKEWAYS: SAFE STREETS

M:\DESIGN\Projects\15327\CAD\Sewers\15327SWR-PipeNetwork.dwg

15327

EC-6

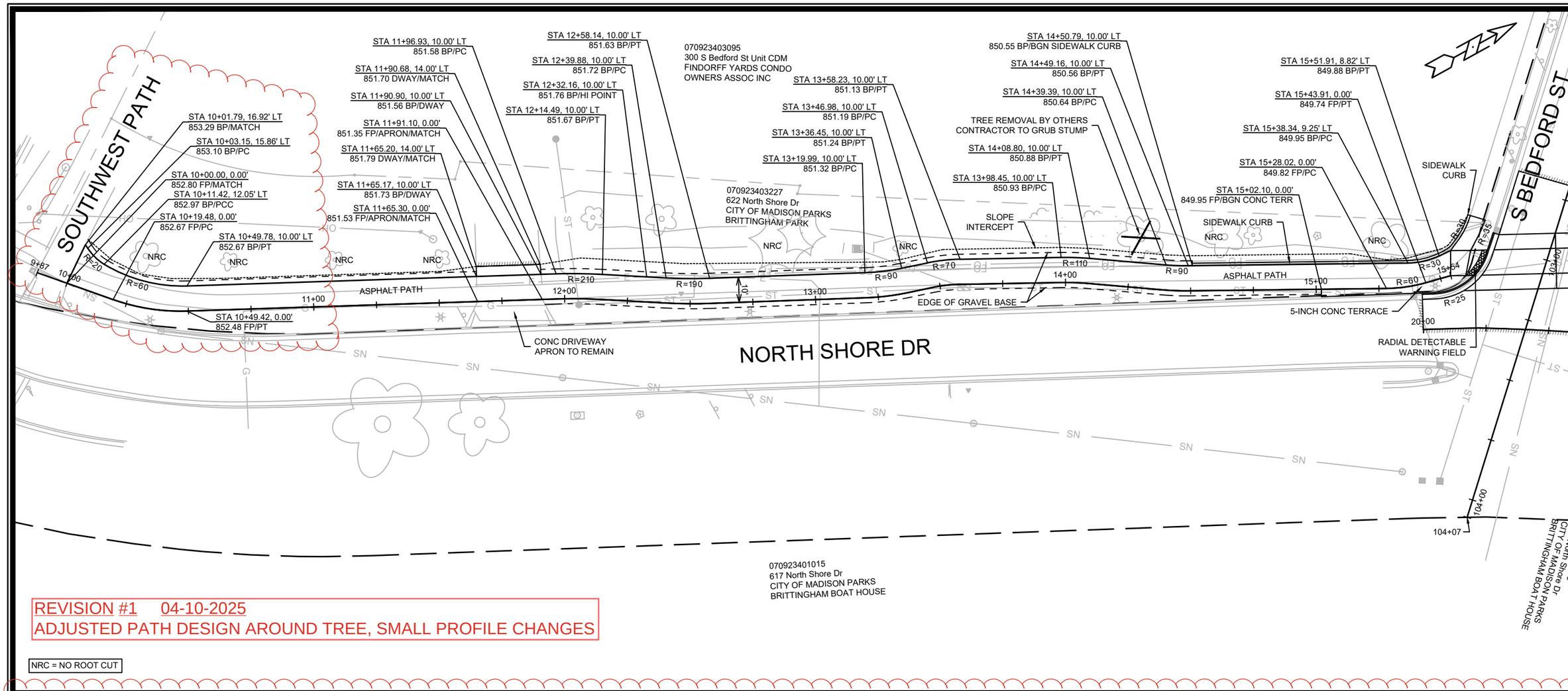


REVISION #1 04-10-2025
ADJUSTED PATH DESIGN AROUND TREE, SMALL PROFILE CHANGES

NRC = NO ROOT CUT

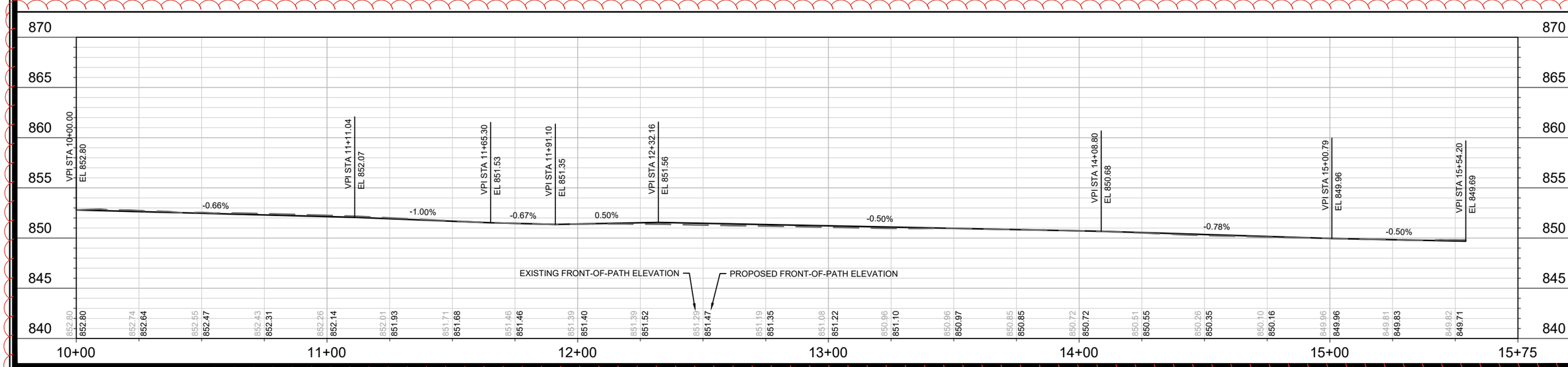


| MARK | REVISION | DATE | BY |
|---|---|---|---|
| --- | --- | --- | --- |
| --- | --- | --- | --- |
| --- | --- | --- | --- |
| --- | --- | --- | --- |

Designed By: AJC | Date: 4/10/2025 12:43 PM | Scale: 1" = 40'

15104

MADISON, WI

CONTRACT NO: 8769

NORTH SHORE DRIVE PATH - PLAN & PROFILE

NORTH SHORE DR PATH

M:\DESIGN\Projects\15104\CAD\Streets\15104EN-PnP.dwg

15104

P-1

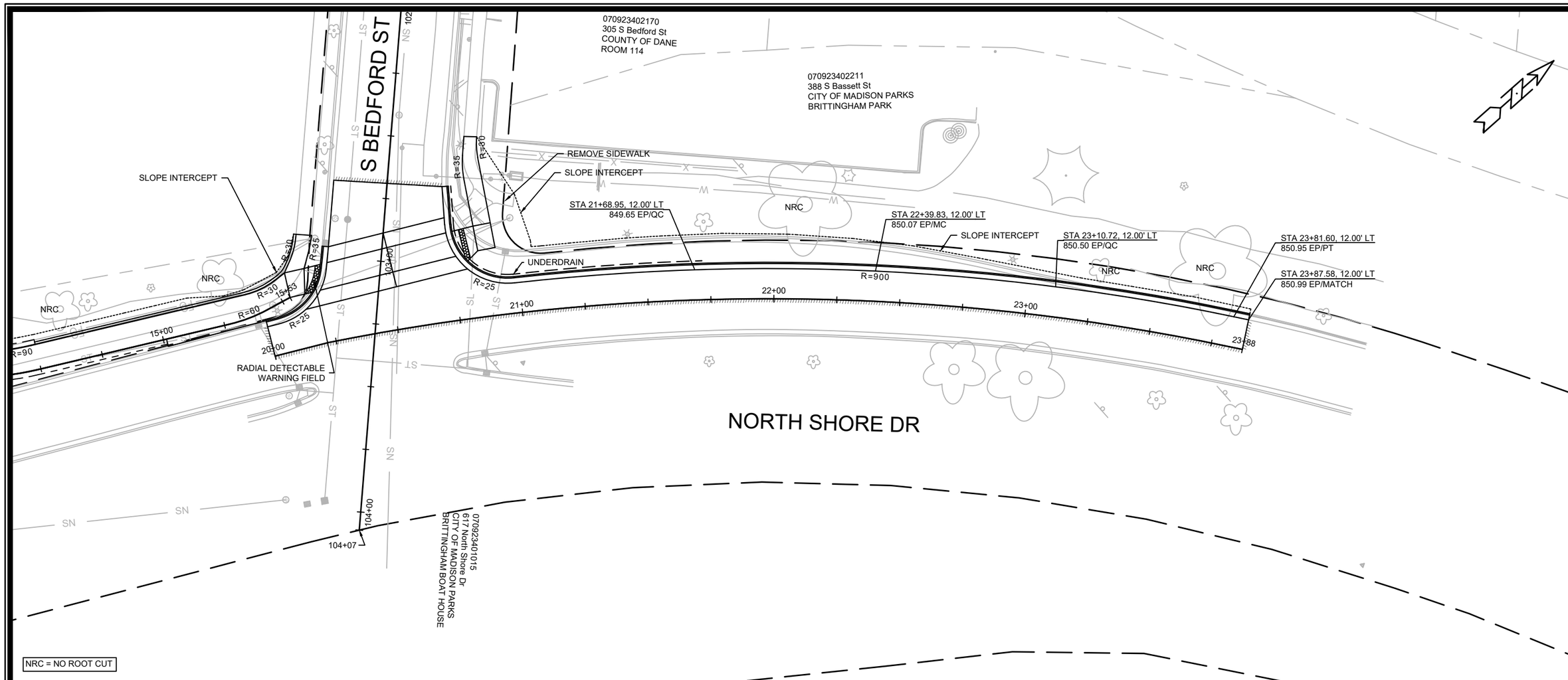


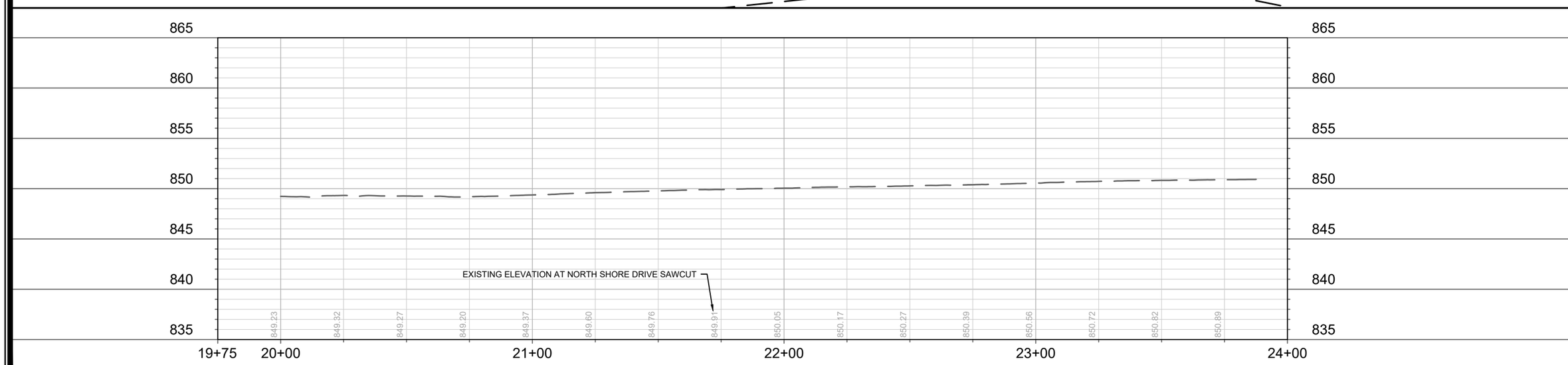


| MARK | REVISION | DATE | BY |
|---|---|---|---|
| --- | --- | --- | --- |
| --- | --- | --- | --- |
| --- | --- | --- | --- |
| --- | --- | --- | --- |
| --- | --- | --- | --- |

Designed By: AJC | Date: 1/17/2025 12:34 PM | Scale: 1" = 40'

15104 | P-2

15104

MADISON, WI

CONTRACT NO: 8769

NORTH SHORE DRIVE - PLAN & PROFILE

NORTH SHORE DR PATH

M:\DESIGN\Projects\15104\CAD\Streets\15104EN-PnP.dwg

15104

P-2

SCALE: 1"=20'

SLOPE INTERCEPT
STA 102+90.89, 44.78' LT
849.92 BW/KEY
STA 102+64.69, 30.24' LT
850.41 FW/PT
STA 102+92.76, 38.03' LT
849.82 FW/RAMP
STA 102+81.25, 42.10' LT
850.08 BW/KEY
STA 102+55.79, 35.04' LT
850.68 BW/PT
UNDERDRAIN
STA 102+83.12, 35.36' LT
849.97 FW/RAMP
STA 102+55.52, 28.97' LT
850.62 FW/PC
STA 102+47.61, 33.95' LT
850.87 BW/PC/MATCH
R=30
R=35
7'
13'
R=25
21+00
STA 103+04.30, 53.60' LT
849.17 EP/PRC
STA 103+04.74, 47.79' LT
849.12 EP/LO POINT
NORTH SHORE DR
070923401015
617 North Shore Dr
CITY OF MADISON PAR
BRITTINGHAM BOAT HO
STA 103+00.28, 34.52' LT
849.40 EP/MC/END RAMP
STA 102+95.64, 29.50' LT
849.81 EP/END T-T/BGN RAMP
STA 102+68.47, 21.83' LT
849.88 EP/MATCH/SAWCUT
STA 102+74.60, 22.75' LT
849.79 EP/LO POINT
STA 102+80.73, 23.68' LT
849.82 EP/BGN RAMP
STA 102+83.49, 24.09' LT
849.90 EP/PC
STA 102+86.69, 24.79' LT
850.00 EP/END RAMP/BGN T-T/HI POINT
RAISED PATH CROSSING. 9-INCH PAVEMENT PER S.D.D. 3.11. SEE INSET DETAIL FOR TABLE-TOP CURB & GUTTER THRU RAMPS
STA 103+03.86, 5.10' LT
850.01 CONC/END T-T/BGN RAMP
STA 103+09.55, 7.02' LT
849.79 CONC/END RAMP
102+00
103+00
104+00
104+07
S BEDFORD ST
STA 102+94.41, 1.92' LT
850.22 CONC/END RAMP/BGN T-T/HI POINT
STA 102+88.73, 0.00'
850.07 CONC/BGN RAMP
RADIAL DETECTABLE WARNING FIELD
STA 103+13.36, 23.04' RT
849.69 EP/END T-T/BGN RAMP
STA 103+19.09, 26.16' RT
849.49 EP/MC
STA 103+04.79, 21.38' RT
849.80 EP/PC
STA 103+02.27, 21.34' RT
849.83 EP/END RAMP/BGN T-T/HI POINT
STA 102+69.36, 21.23' RT
850.00 EP/SAWCUT
STA 102+95.90, 21.24' RT
849.63 EP/MATCH/BGN RAMP
STA 103+21.37, 28.04' RT
849.40 EP/END RAMP
R=35
STA 102+92.02, 34.43' RT
850.08 BW/MATCH
10'
13.33'
R=25
STA 102+95.31, 28.54' RT
849.96 FW/PT/BGN SIDEWALK CURB
R=30
STA 102+94.19, 34.52' RT
850.05 BW/PT
STA 102+98.90, 29.01' RT
849.89 FW/PC
STA 103+05.26, 30.19' RT
849.75 FW/RAMP
STA 103+02.74, 36.13' RT
849.93 BW/PC
STA 103+07.67, 37.82' RT
849.86 BW/KEY
STA 103+15.39, 29.08' RT
849.60 FW/RAMP
STA 103+17.20, 34.80' RT
849.69 BW/KEY
8.6'
R=30
R=60
20'
STA 103+28.04, 38.31' RT
849.28 EP/PT
STA 103+29.56, 42.75' RT
849.23 EP/MATCH
NRC
070923403095
300 S Bedford St Unit CDM
FINDORFF YARDS CONDO
OWNERS ASSOC INC

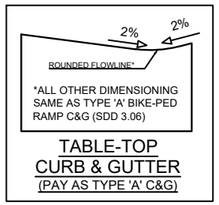


TABLE-TOP
CURB & GUTTER
(PAY AS TYPE 'A' C&G)

NRC = NO ROOT CUT

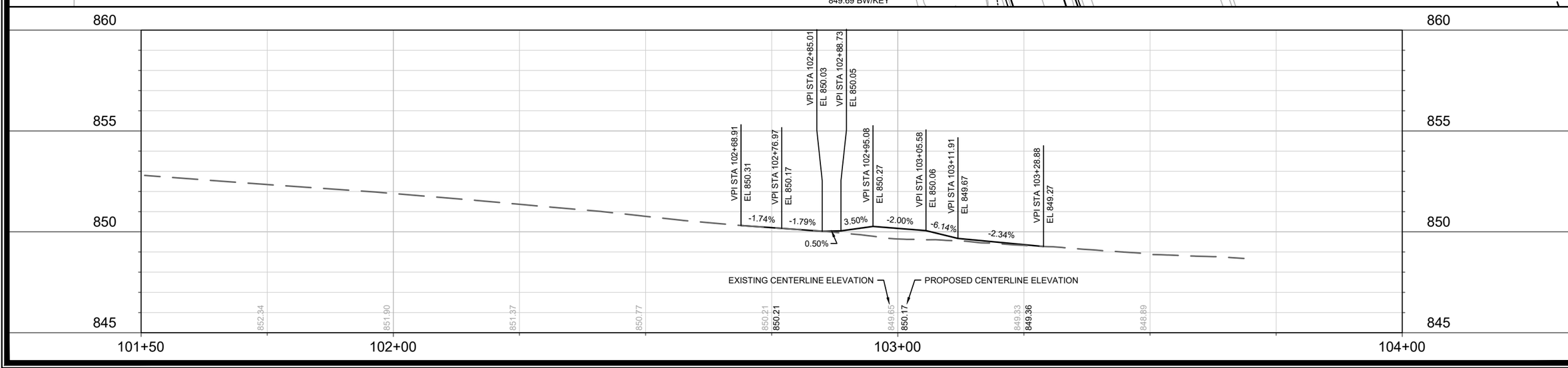


| MARK | REVISION | DATE | BY |
|---|---|---|---|
| --- | --- | --- | --- |
| --- | --- | --- | --- |
| --- | --- | --- | --- |
| --- | --- | --- | --- |
| --- | --- | --- | --- |

Designed By: AJC | Date: 1/17/2025 12:35 PM | Scale: 1" = 20'

15104

MADISON, WI

CONTRACT NO: 8769

S BEDFORD ST - PLAN & PROFILE
NORTH SHORE DR PATH

M:\DESIGN\Projects\15104\CAD\Streets\15104EN-PnP.dwg

15104

P-3

P-3

SCALE: 1"=20'

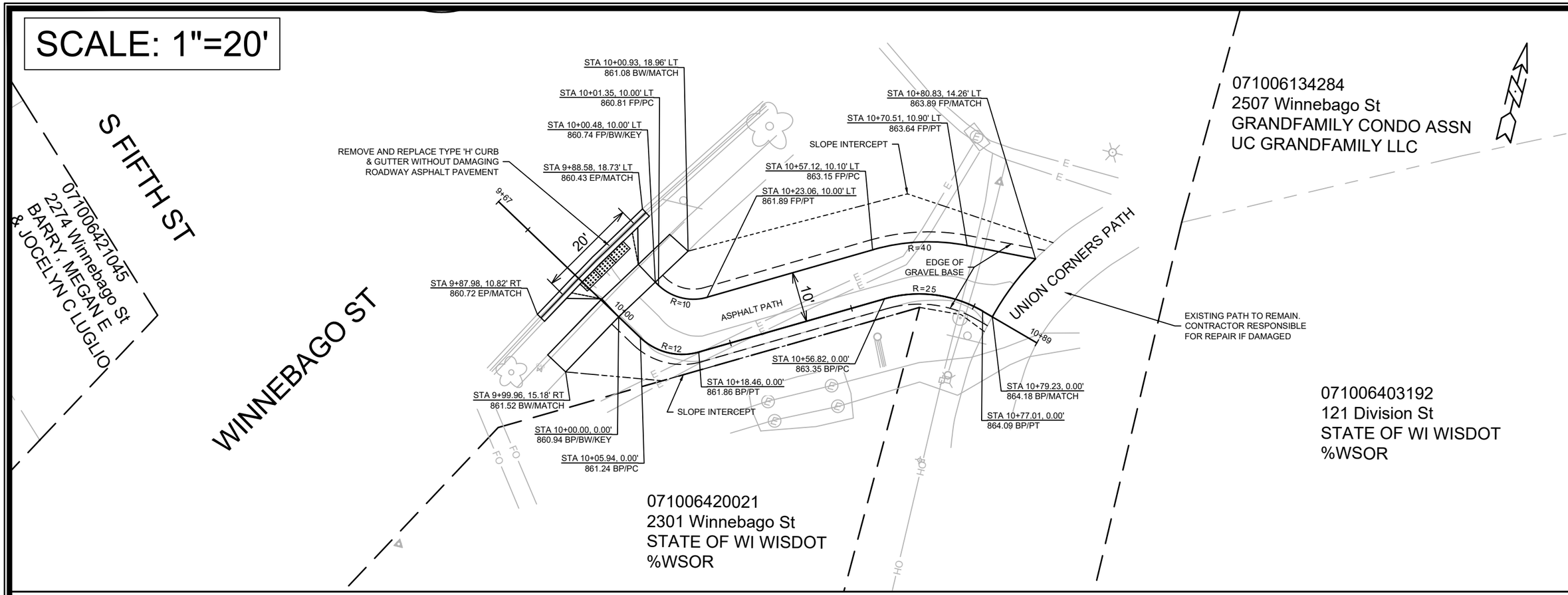


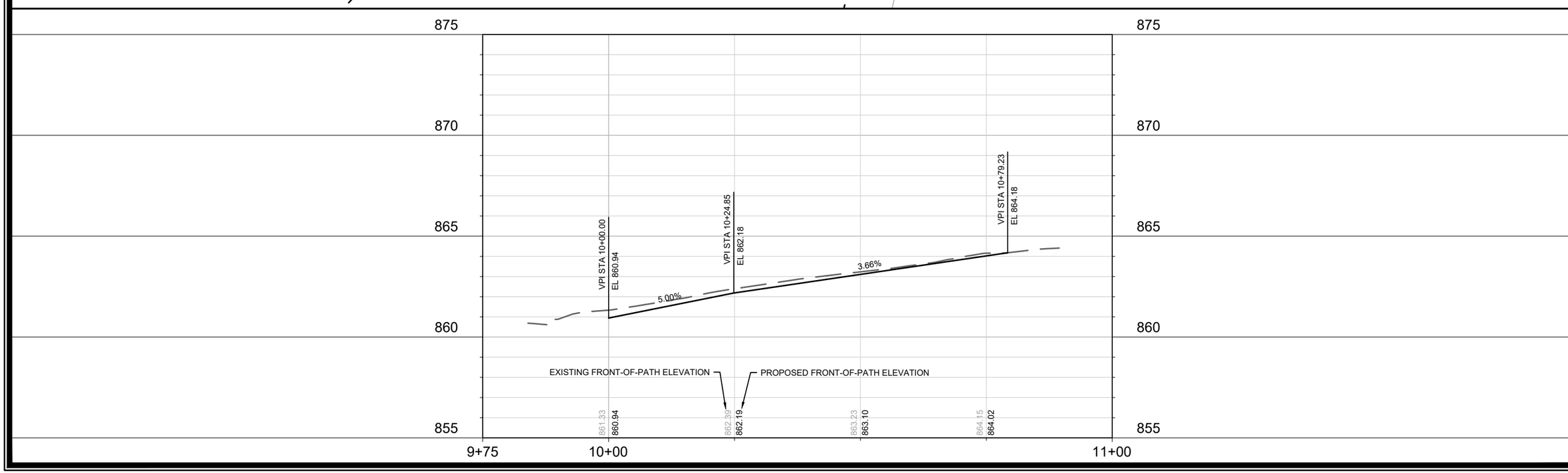


| MARK | REVISION | DATE | BY |
|---|---|---|---|
| --- | --- | --- | --- |
| --- | --- | --- | --- |
| --- | --- | --- | --- |
| --- | --- | --- | --- |

Designed By: AJC | Date: 12/4/2024 2:04 PM | Scale: 1" = 20'

15327 | P-4

15327

MADISON, WI

CONTRACT NO: 8769

WINNEBAGO PATH - PLAN & PROFILE

EAST MADISON BIKEWAYS: SAFE STREETS

\\Gisserver\data\DESIGN\Projects\15327\CAD\Streets\15327EN-PnP_Winnebago.dwg

15327

P-4

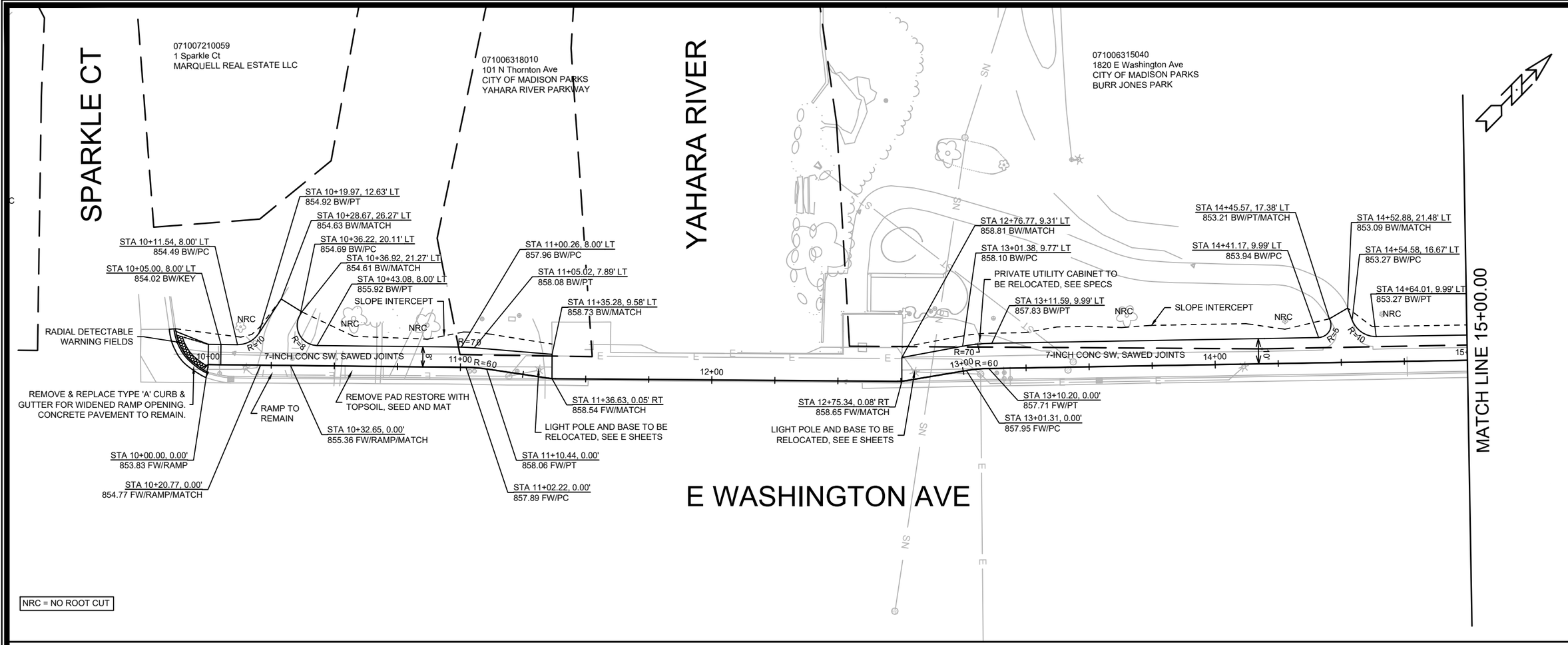


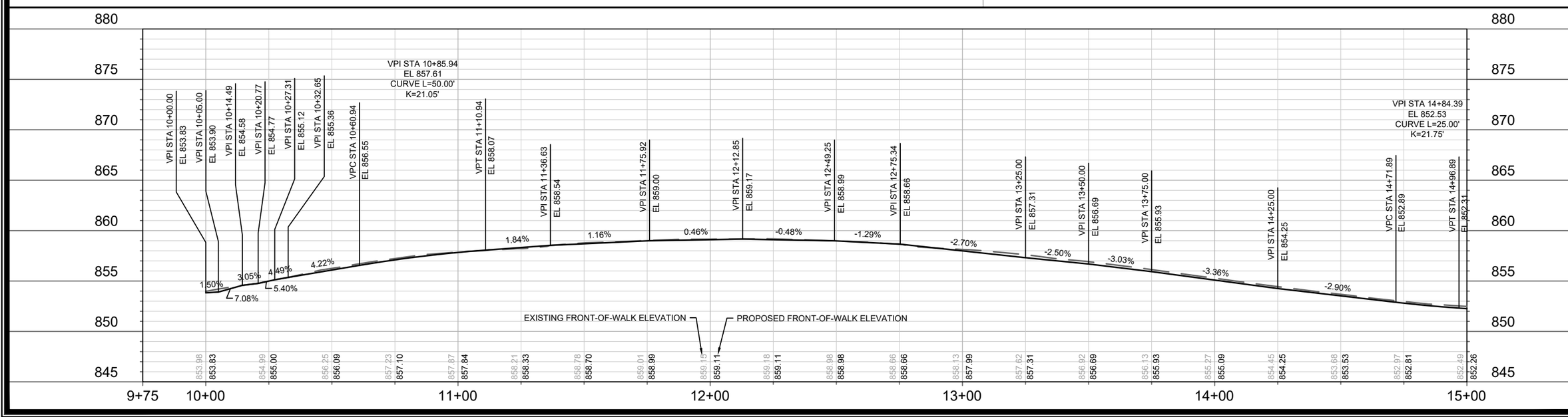


| MARK | REVISION | DATE | BY |
|---|---|---|---|
| --- | --- | --- | --- |
| --- | --- | --- | --- |
| --- | --- | --- | --- |
| --- | --- | --- | --- |
| --- | --- | --- | --- |

Designed By: AJC | Date: 1/16/2025 4:04 PM | Scale: 1" = 40'

15327

P-5

15327

MADISON, WI

8769

CONTRACT NO:

E WASHINGTON AVE SIDEWALK WIDENING - PLAN & PROFILE

EAST MADISON BIKEWAYS: SAFE STREETS

\\Gisserver\data\DESIGN\Projects\15327\CAD\Streets\15327EN-PnP_BurrJones-EWash.dwg

15327

P-5

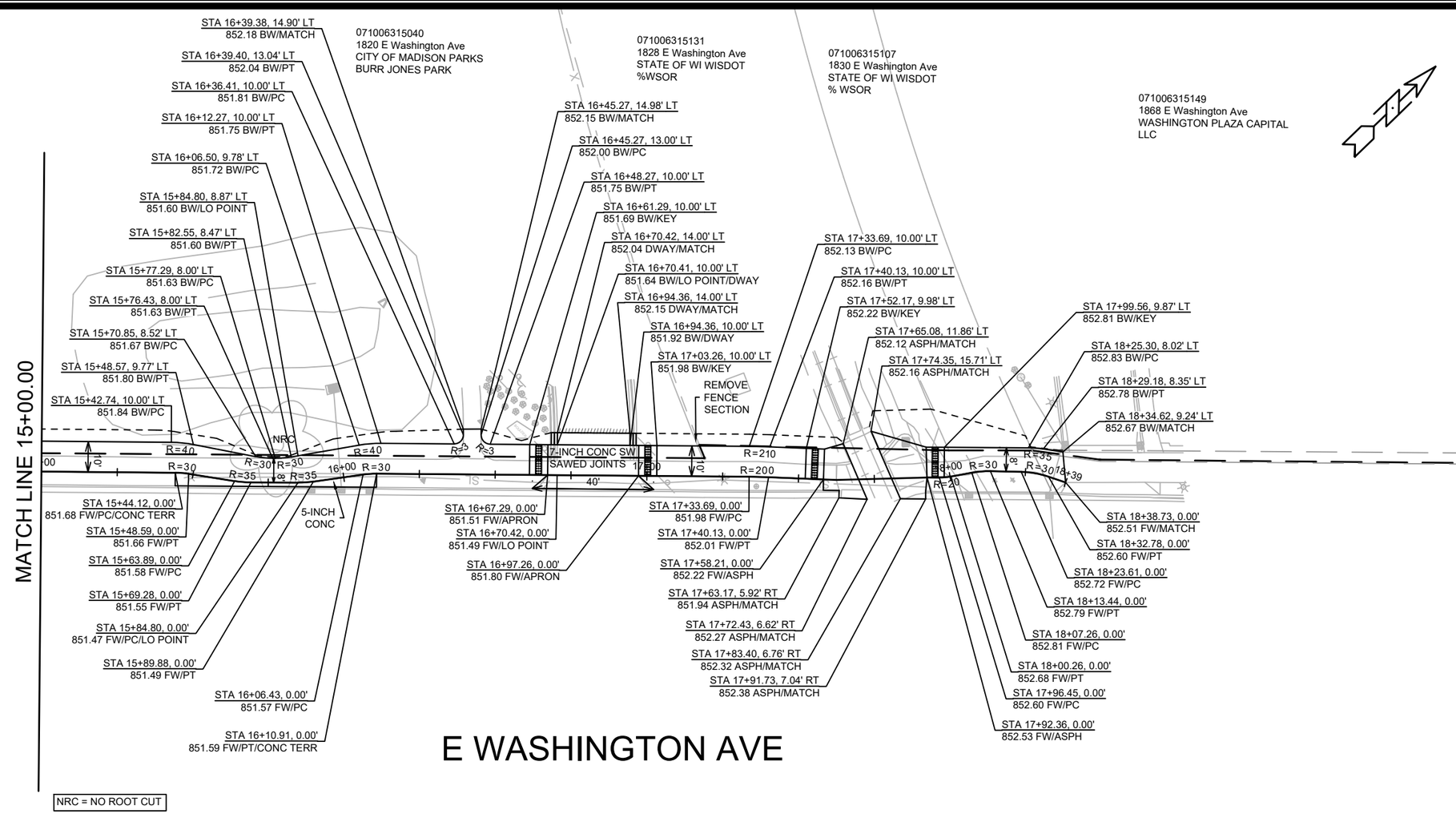


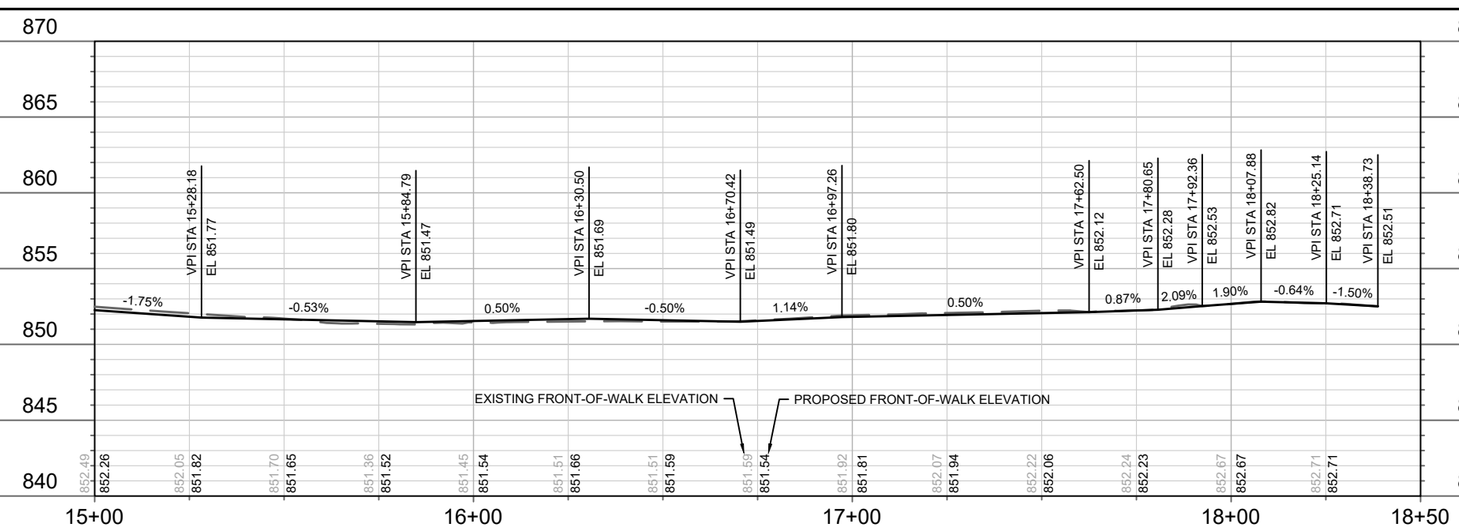


| MARK | REVISION | DATE | BY |
|---|---|---|---|
| --- | --- | --- | --- |
| --- | --- | --- | --- |
| --- | --- | --- | --- |
| --- | --- | --- | --- |
| --- | --- | --- | --- |

Designed By: AJC | Date: 1/16/2025 4:05 PM | Scale: 1" = 40'

15327 | P-6

15327

E WASHINGTON AVE SIDEWALK WIDENING - PLAN & PROFILE

EAST MADISON BIKEWAYS: SAFE STREETS

MADISON, WI

CONTRACT NO: 8769

\\Gisserver\data\DESIGN\Projects\15327\CAD\Streets\15327EN-PnP_BurrJones-EWash.dwg

15327

P-6

EROSION CONTROL NOTES:

EROSION CONTROL MEASURES SHALL BE IN PLACE PRIOR TO ANY OTHER CONSTRUCTION ACTIVITY.

THE CONTRACTOR IS RESPONSIBLE FOR THE CONSTRUCTION AND MAINTENANCE OF ALL EROSION CONTROL MEASURES UNTIL FINAL ACCEPTANCE BY THE CITY OF MADISON.

THE CONTRACTOR SHALL INSTALL AND MAINTAIN EROSION CONTROL MEASURES IN ACCORDANCE WITH THE WDNRSOC STANDARDS AND CITY OF MADISON STANDARD SPECIFICATIONS.

THE CONTRACTOR SHALL PROVIDE STREET CLEANING AS NEEDED ON A DAILY BASIS TO KEEP TRACKING TO A MINIMUM.

INLET PROTECTION SHALL BE INSTALLED WITHIN THE CONSTRUCTION LIMITS. ADDITIONAL INLET PROTECTION SHALL BE INSTALLED AS DIRECTED.

POLYMER SHALL BE APPLIED TO DISTURBED AREAS AS DIRECTED BY THE CONSTRUCTION ENGINEER.

REVISION #1 04-10-2025
UPDATED FULL N FIRST ST SIDEWALK DESIGN AFTER SURVEY OBTAINED

SCALE: 1"=20'

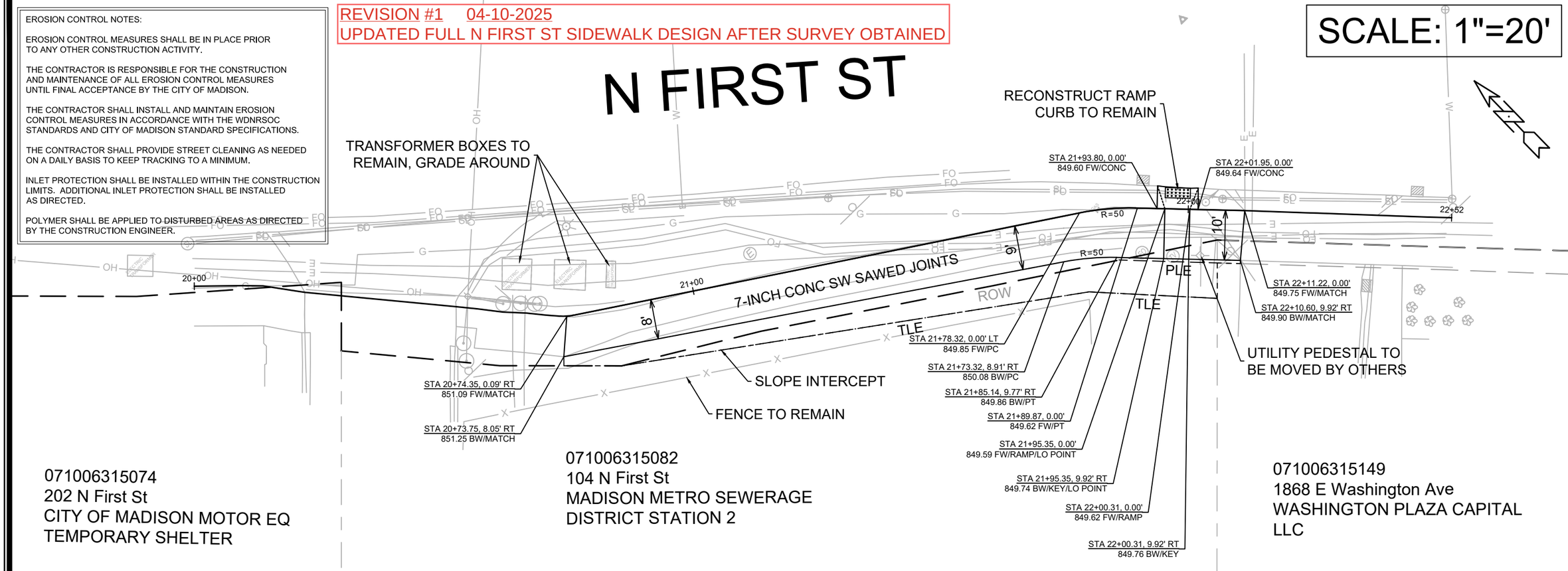


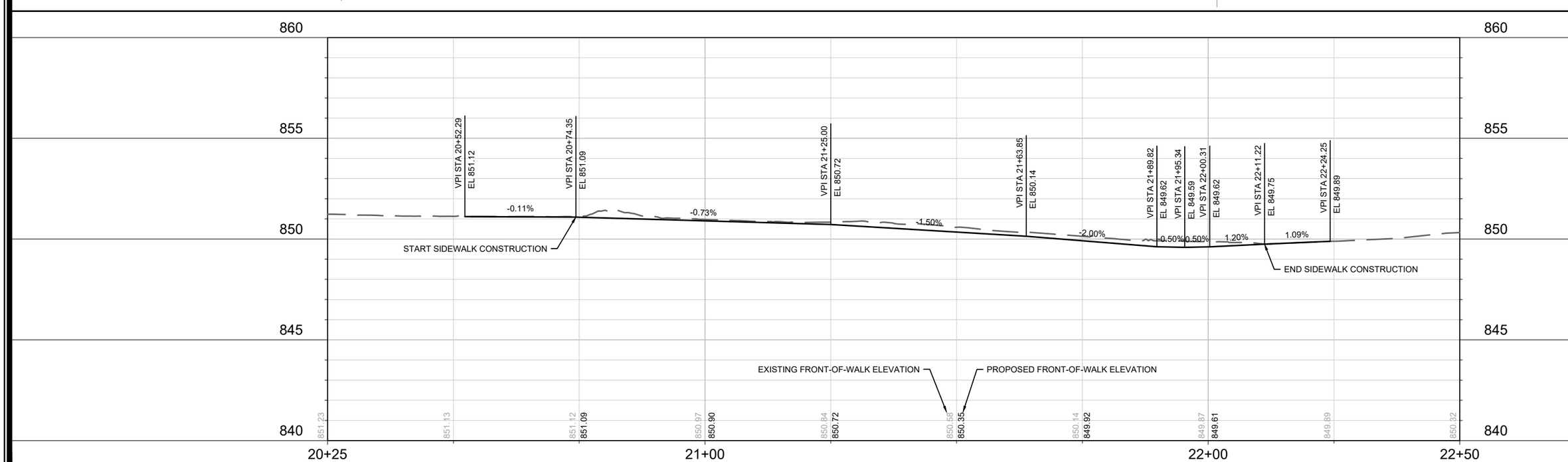


| MARK | REVISION | DATE | BY |
|---|---|---|---|
| --- | --- | --- | --- |

Designed By: AJC | Date: 3/27/2025 4:18 PM | Scale: 1" = 20' | P-7

15327

N FIRST ST SIDEWALK WIDENING - PLAN & PROFILE

EAST MADISON BIKEWAYS: SAFE STREETS

MADISON, WI

CONTRACT NO: 8769

\\Gisserver\data\DESIGN\Projects\15327\CAD\Streets\15327EN-PnP_Burr,Jones-EWash.dwg

15327

P-7

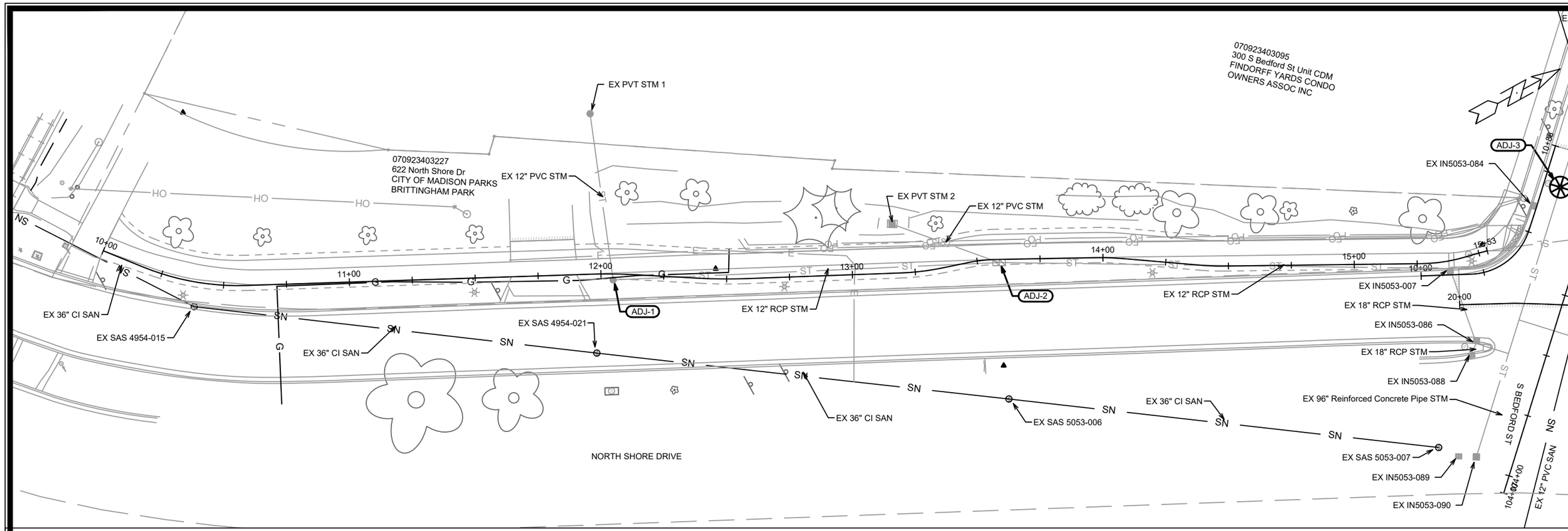


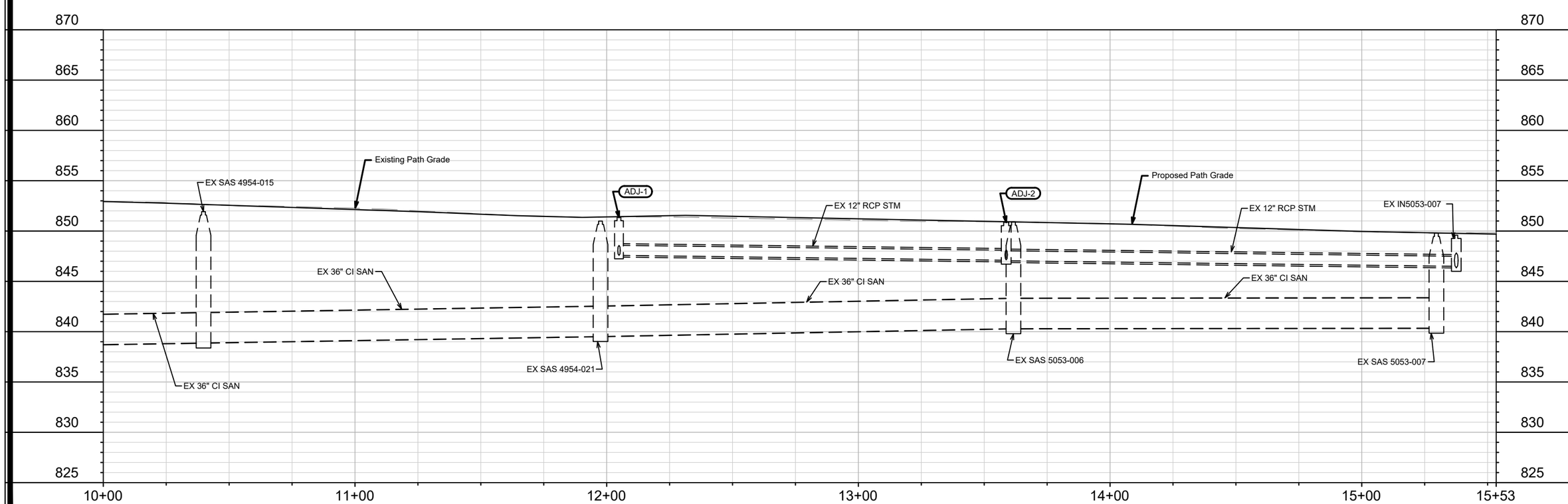


| MARK | REVISION | DATE | BY |
|---|---|---|---|
| --- | --- | --- | --- |
| --- | --- | --- | --- |
| --- | --- | --- | --- |
| --- | --- | --- | --- |

Designed By: AJC | Date: 1/16/2025 8:39 AM | Scale: 1" = 40'

15104

U-1

15104

MADISON, WI

CONTRACT NO: 8769

NORTH SHORE DRIVE PATH - PLAN & PROFILE

NORTH SHORE DR PATH

M:\DESIGN\Projects\15104\CAD\Sewers\15104SWR-PipeNetwork.dwg

CITY OF MADISON WISCONSIN

15104

U-1

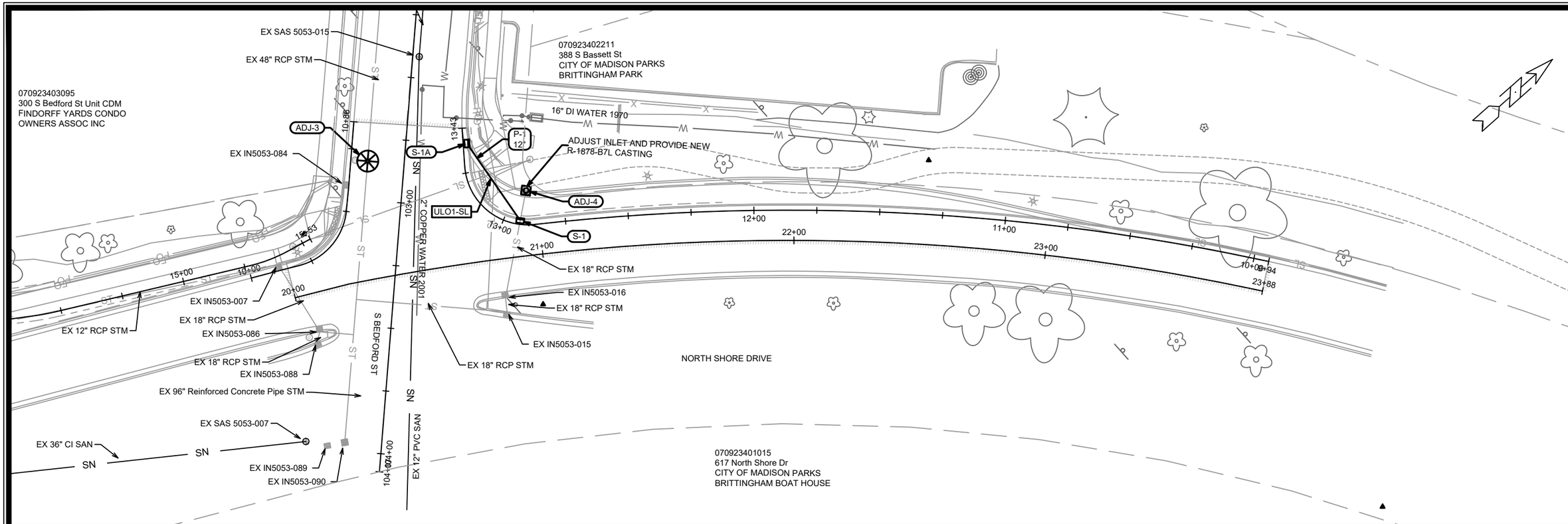


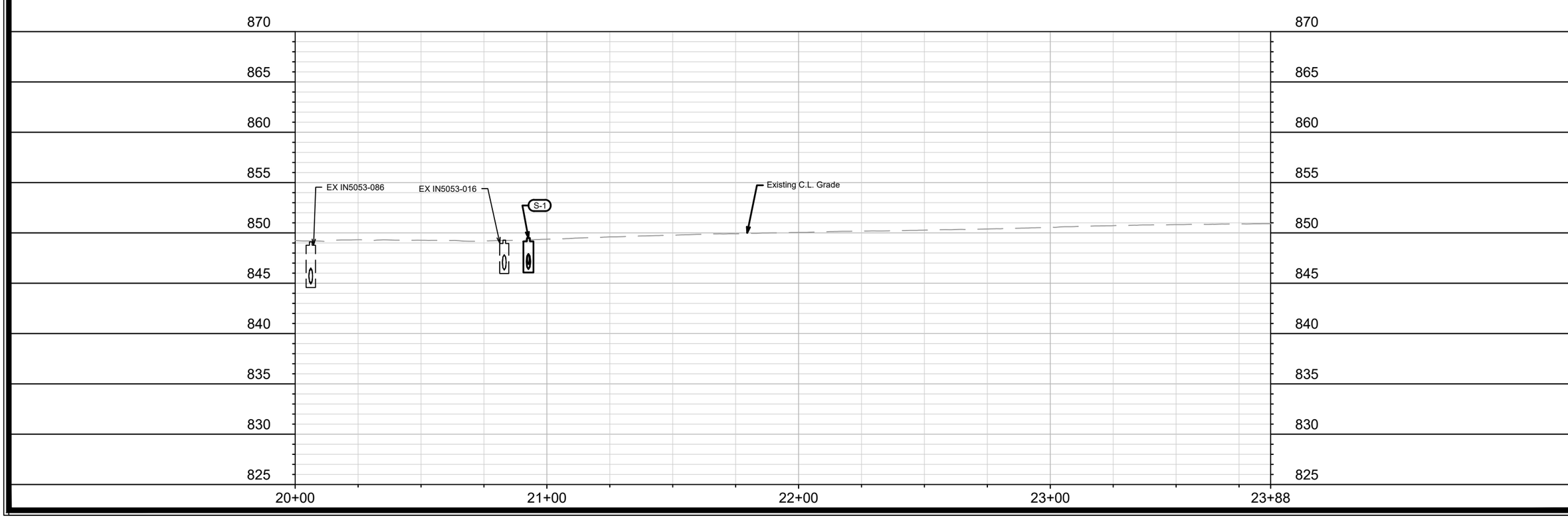


| MARK | REVISION | DATE | BY |
|---|---|---|---|
| --- | --- | --- | --- |
| --- | --- | --- | --- |
| --- | --- | --- | --- |
| --- | --- | --- | --- |
| --- | --- | --- | --- |

Designed By: AJC | Date: 1/16/2025 10:43 AM | Scale: 1" = 40'

U-2

15104

MADISON, WI

CONTRACT NO: 8769

NORTH SHORE DRIVE - PLAN & PROFILE

NORTH SHORE DR PATH

M:\DESIGN\Projects\15104\CAD\Sewers\15104SWR-PipeNetwork.dwg

15104

U-2

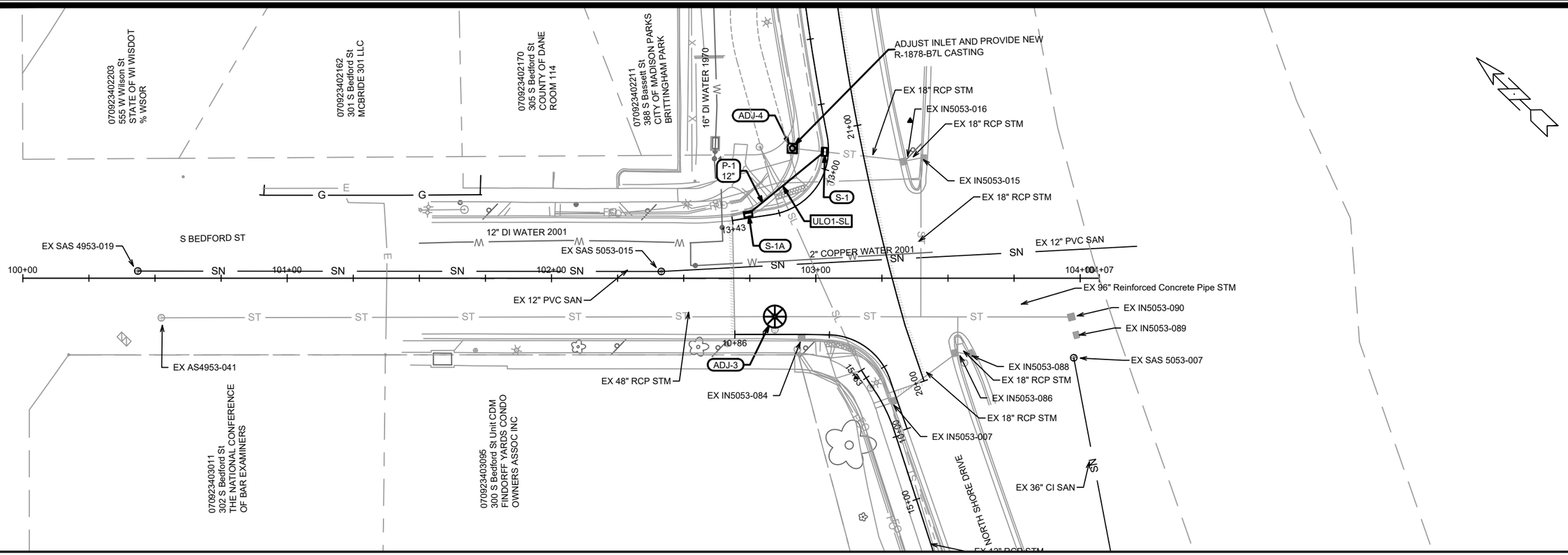


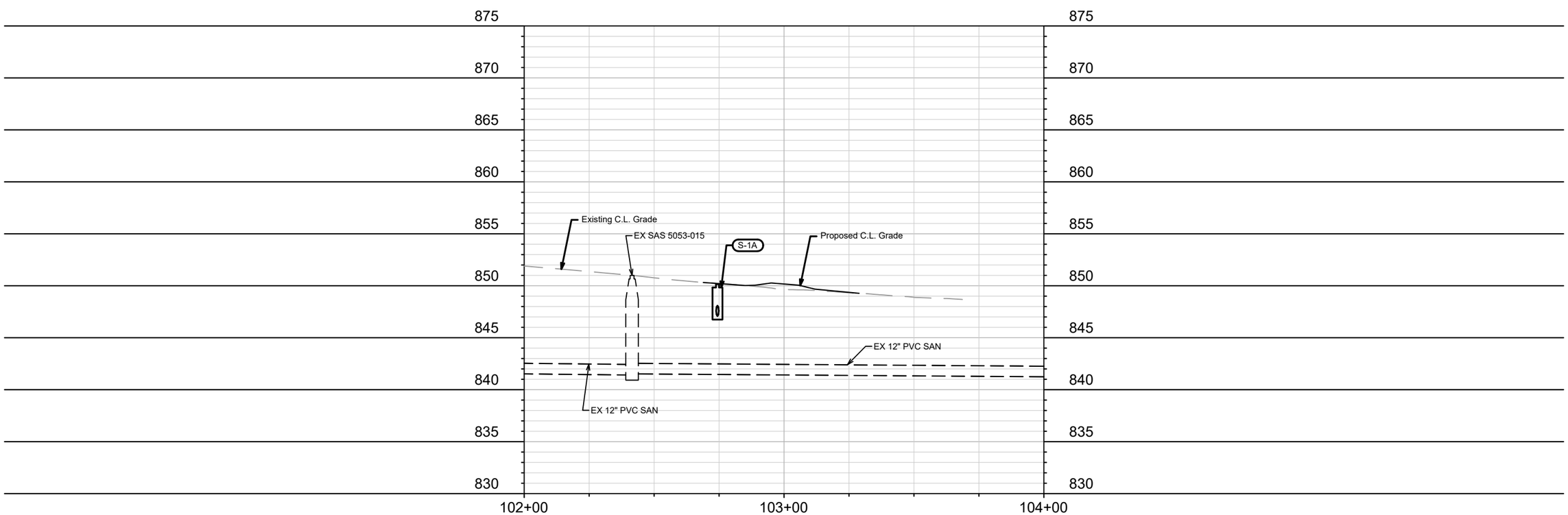


| MARK | REVISION | DATE | BY |
|---|---|---|---|
| --- | --- | --- | --- |
| --- | --- | --- | --- |
| --- | --- | --- | --- |
| --- | --- | --- | --- |

Designed By: AJC | Date: 1/16/2025 10:49 AM | Scale: 1" = 40'

15104

MADISON, WI

CONTRACT NO: 8769

S BEDFORD ST - PLAN & PROFILE

NORTH SHORE DR PATH

M:\DESIGN\Projects\15104\CAD\Sewers\15104SWR-PipeNetwork.dwg

15104

U-3

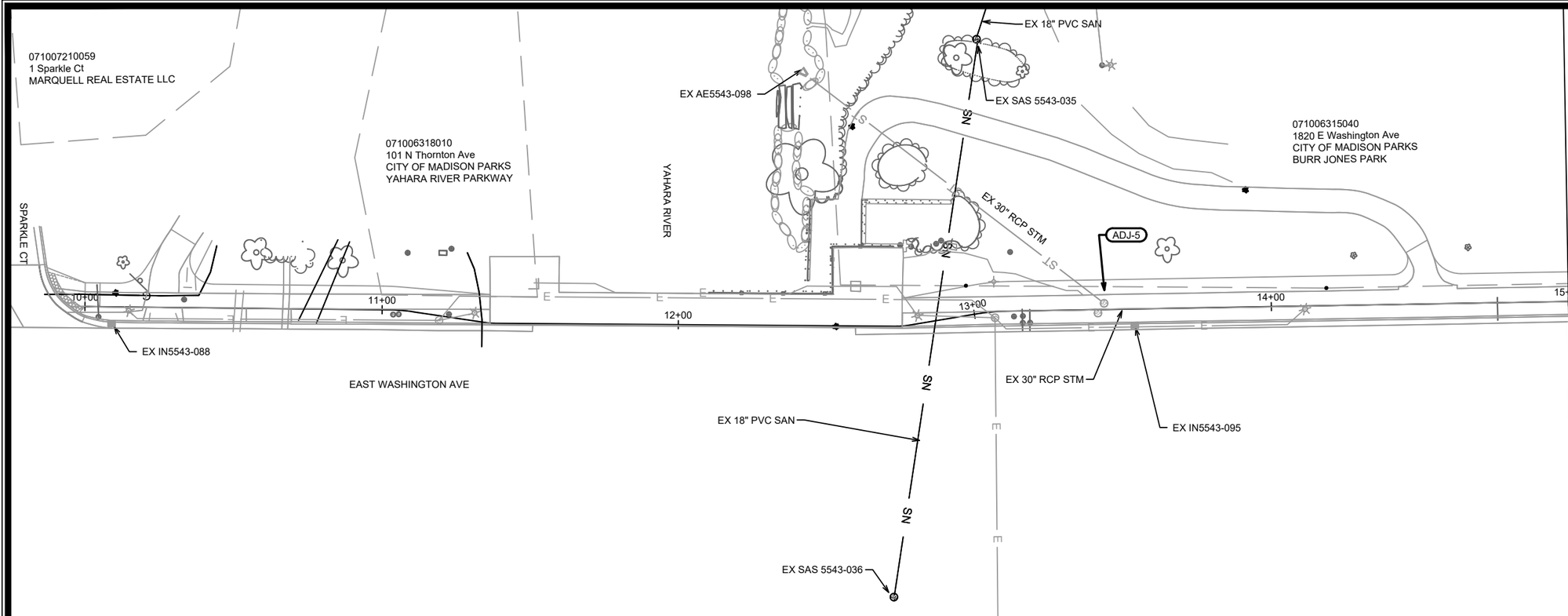


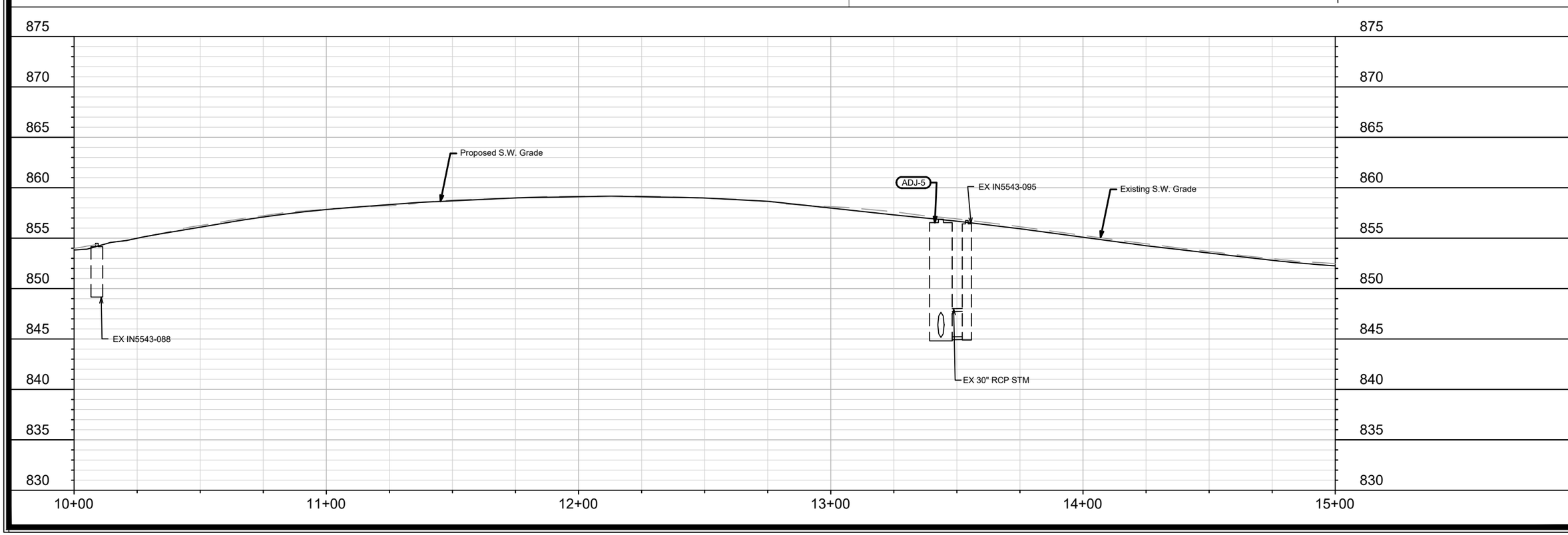


| MARK | REVISION | DATE | BY |
|---|---|---|---|
| --- | --- | --- | --- |
| --- | --- | --- | --- |
| --- | --- | --- | --- |
| --- | --- | --- | --- |
| --- | --- | --- | --- |

Designed By: AJC | Date: 1/16/2025 2:19 PM | Scale: 1" = 40'

15327 | U-4

E WASHINGTON AVE SIDEWALK WIDENING - PLAN & PROFILE

EAST MADISON BIKEWAYS: SAFE STREETS

15327

MADISON, WI

CONTRACT NO: 8769

M:\DESIGN\Projects\15327\CAD\Sewers\15327SWR-PipeNetwork.dwg

15327

U-4

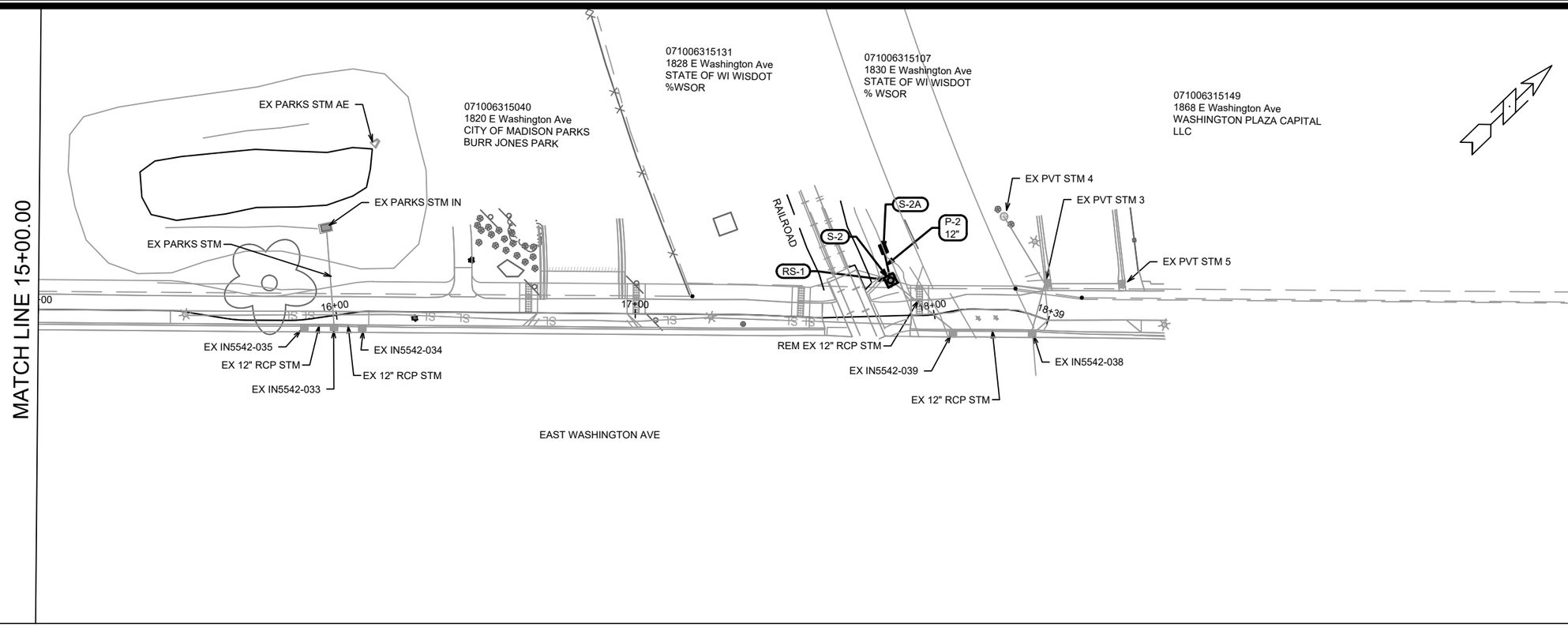


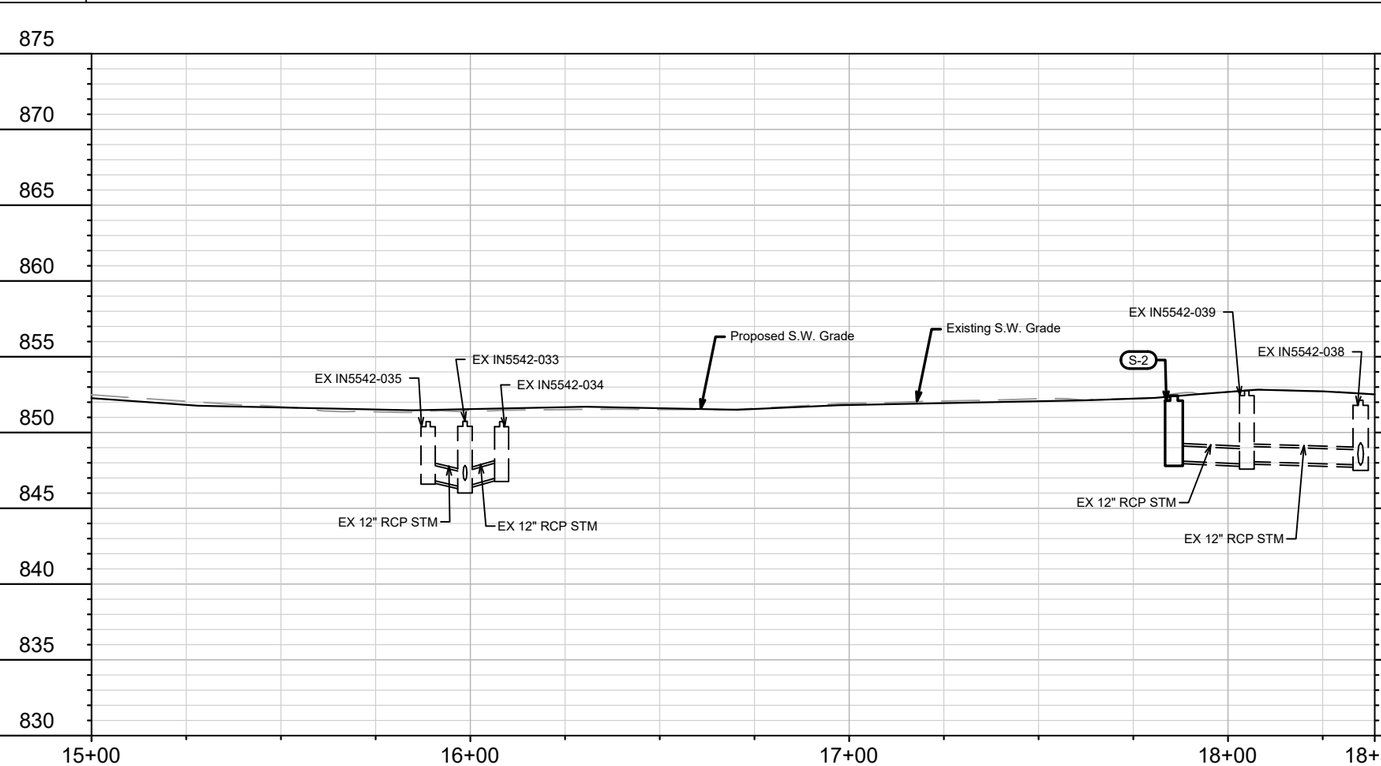


| MARK | REVISION | DATE | BY |
|---|---|---|---|
| --- | --- | --- | --- |
| --- | --- | --- | --- |
| --- | --- | --- | --- |
| --- | --- | --- | --- |

Designed By: AJC | Date: 1/16/2025 2:19 PM | Scale: 1" = 40'

15327 | U-5

15327

MADISON, WI

CONTRACT NO: 8769

E WASHINGTON AVE SIDEWALK WIDENING - PLAN & PROFILE

EAST MADISON BIKEWAYS: SAFE STREETS

M:\DESIGN\Projects\15327\CAD\Sewers\15327SWR-PipeNetwork.dwg

15327

U-5

# STORM SEWER SCHEDULE

| NORTH SHORE DRIVE PATH<br>PROJECT NO. 15104 | SHEET NO.<br>U-6 |
|---|---|
| STORM SEWER SCHEDULE<br>CITY OF MADISON | |

## PROPOSED STORM STRUCTURES

| STRUC. NO. | STATION | LOCATION (OFFSET) | TYPE | TOP OF CASTING | E.I. | DEPTH | NOTES |
|---|---|---|---|---|---|---|---|
| **NORTH SHORE DRIVE** | | | | | | | |
| S-1 | 20+92.67 | LT-14.21 | H-INLET | 849.49 | 846.40 | 3.09 | FP; LP; W/R-3067-7004-VB [1] |
| **S BEDFORD ST** | | | | | | | |
| S-1A | 102+74.38 | LT-24.23 | H-INLET | 850.16 | 847.09 | 3.07 | LP; W/R-3067-7004-VB |

## ADJUST EXISTING STORM STRUCTURES

| STRUC. NO. | ID NO. | STATION | LOCATION (OFFSET) | EX TOC | PROP TOC | ADJ (FT) | NOTES |
|---|---|---|---|---|---|---|---|
| **NORTH SHORE DRIVE** | | | | | | | |
| ADJ-1 | PVT STM INLET | 12+04.90 | RT-2.38 | 850.84 | 851.36 | 0.52 | |
| ADJ-2 | IN4953-083 | 13+58.74 | RT-1.21 | 850.87 | 850.87 | 0.00 | |
| ADJ-4 | IN5053-017 | 20+96.23 | LT-25.80 | 849.48 | 849.90 | 0.42 | [2] |
| **S BEDFORD ST** | | | | | | | |
| ADJ-3 | AS5053-083 | 102+84.49 | RT-14.52 | 849.83 | 849.82 | -0.01 | [3] |

## STORM SEWER ULOs

| ULO NO. | STATION | LOCATION (OFFSET) | TYPE | NOTES |
|---|---|---|---|---|
| **S BEDFORD ST** | | | | |
| ULO1-SL | 102+87.41 | LT-34.91 | STREETLIGHT | |

## PROPOSED STORM PIPES

| PIPE NO. | FROM (DNSTM) | TO (UPSTM) | DISCH. E.I. | INLET E.I. | PLAN (PAY) LGTH (FT) | PIPE LGTH (FT) | SLOPE (%) | PIPE SIZE | TYPE | NOTES |
|---|---|---|---|---|---|---|---|---|---|---|
| **S BEDFORD ST** | | | | | | | | | | |
| P-1 | S-1 | S-1A | 846.90 | 847.09 | 37 | 34 | 0.56% | 12" | TYPE II | |

**NOTE:** PLAN LENGTH (PAY LENGTH) IS FROM CENTER OF STRUCTURE TO CENTER OF STRUCTURE. PIPE LENGTH IS ACTUAL LENGTH OF PIPE FROM STRUCTURE WALL TO STRUCTURE WALL. SLOPE CALCULATED USING PIPE LENGTH.

## SPECIFIC NOTES

[1] CONNECT TO EXISTING 18" RCP STORM PIPE
[2] ADJUST INLET AND PROVIDE NEW R-1878-B7L CASTING
[3] MATCH NEW STREET GRADE

## STANDARD NOTES:

- ABBREVIATIONS: AE = APRON ENDWALL; RCP = REINFORCED CONCRETE PIPE; HERCP = HORIZONTAL ELLIPTICAL REINFORCED CONCRETE PIPE; DNA = DOES NOT APPLY; SAS = SEWER ACCESS STRUCTURE; LP = LOW POINT INLET STRUCTURE; FP = FIELD POURED STRUCTURE; TR = TOP OF CONCRETE ROOF; NCM = NO CROWN MATCH FOR PIPES; UD = UNDERDRAIN
- TOP OF CASTING GRADE GIVEN IS THE TOP OF CURB FOR INLET STRUCTURES AND THE FLOWLINE OF THE CLOSED CASTING FOR SASs.
- TOP OF CONCRETE ROOF (TR) IS 1.25 BELOW TOP OF CASTING UNLESS OTHERWISE NOTED.
- ALL REINFORCED CONCRETE PIPES TO BE CLASS III UNLESS OTHERWISE NOTED.
- SURVEYOR TO CONFIRM THAT ALL INLET STATION / OFFSETS LINE UP WITH PROPOSED CURB AND GUTTER.
- ALL REBAR FOR FIELD POUR STRUCTURES SHALL BE EPOXY COATED. ANY EXPOSED STEEL SHALL BE TOUCHED UP OR RECOATED PRIOR TO USE.
- ALL FIELD POURED SAS STORM STRUCTURES SHALL BE CONSTRUCTED IN ACCORDANCE WITH STANDARD DETAIL DRAWING 5.7.3.
- ALL PRECAST SAS STORM STRUCTURES SHALL BE CONSTRUCTED IN ACCORDANCE WITH STANDARD DETAIL DRAWING 5.7.5.
- ALL STRUCTURES CALLED OUT AS FIELD POURED SHALL BE FIELD POURED. ALL OTHER STRUCTURES (NOT INDICATED AS FIELD POURED) SHALL BE SUBMITTED TO CITY ENGINEERING FOR APPROVAL IF PRECAST STRUCTURES ARE PREFERRED. CONTACT ERIN GETER OF CITY ENGINEERING AT (608) 266-4058 FOR PRECAST APPROVALS, FAX SHOP DRAWINGS TO (608)264-9275, OR EMAIL SHOP DRAWINGS TO EGETER@CITYOFMADISON.COM.

# STORM SEWER SCHEDULE

| EAST MADISON BIKEWAYS: SAFE STREETS<br>PROJECT NO. 15327 | SHEET NO.<br>U-7 |
|---|---|
| STORM SEWER SCHEDULE<br>CITY OF MADISON | |

## PROPOSED STORM STRUCTURES

| STRUC. NO. | STATION | LOCATION (OFFSET) | TYPE | TOP OF CASTING | E.I. | DEPTH | NOTES |
|---|---|---|---|---|---|---|---|
| **E WASHINGTON AVE** | | | | | | | |
| S-2 | 17+85.73 | LT-11.86 | 3X3 STORM SAS | 852.43 | 848.13 | 4.30 | FP; W/R-1550-0054 [1] |
| S-2A | 17+83.63 | LT-22.47 | H-INLET | 851.71 | 848.18 | 3.53 | W/R-1878-B7G |

## ADJUST EXISTING STORM STRUCTURES

| STRUC. NO. | ID NO. | STATION | LOCATION (OFFSET) | EX TOC | PROP TOC | ADJ (FT) | NOTES |
|---|---|---|---|---|---|---|---|
| **E WASHINGTON AVE** | | | | | | | |
| ADJ-5 | SS5543-097 | 13+43.68 | LT-1.95 | 857.15 | 856.88 | -0.27 | [2] |

## REMOVE STORM STRUCTURES

| STRUC. NO. | STRUC. ID | STATION | LOCATION (OFFSET) | TYPE | TOP OF CASTING | DEPTH | NOTES |
|---|---|---|---|---|---|---|---|
| **E WASHINGTON AVE** | | | | | | | |
| RS-1 | IN5542-040 | 17+85.73 | LT-11.86 | H-INLET | 851.20 | 3.07 | |

## PROPOSED STORM PIPES

| PIPE NO. | FROM (DNSTM) | TO (UPSTM) | DISCH. E.I. | INLET E.I. | PLAN (PAY) LGTH (FT) | PIPE LGTH (FT) | SLOPE (%) | PIPE SIZE | TYPE | NOTES |
|---|---|---|---|---|---|---|---|---|---|---|
| **E WASHINGTON AVE** | | | | | | | | | | |
| P-2 | S-2 | S-2A | 848.13 | 848.18 | 11 | 8 | 0.65% | 12" | TYPE II | |

**NOTE:** PLAN LENGTH (PAY LENGTH) IS FROM CENTER OF STRUCTURE TO CENTER OF STRUCTURE. PIPE LENGTH IS ACTUAL LENGTH OF PIPE FROM STRUCTURE WALL TO STRUCTURE WALL. SLOPE CALCULATED USING PIPE LENGTH.

## SPECIFIC NOTES

[1] REPLACE EXISTING INLET WITH NEW STORM SAS, CONNECT TO EXISTING 12" RCP PIPE
[2] MATCH NEW SIDEWALK GRADE

## STANDARD NOTES:

- ABBREVIATIONS: AE = APRON ENDWALL; RCP = REINFORCED CONCRETE PIPE; HERCP = HORIZONTAL ELLIPTICAL REINFORCED CONCRETE PIPE; DNA = DOES NOT APPLY; SAS = SEWER ACCESS STRUCTURE; LP = LOW POINT INLET STRUCTURE; FP = FIELD POURED STRUCTURE; TR = TOP OF CONCRETE ROOF; NCM = NO CROWN MATCH FOR PIPES; UD = UNDERDRAIN

- TOP OF CASTING GRADE GIVEN IS THE TOP OF CURB FOR INLET STRUCTURES AND THE FLOWLINE OF THE CLOSED CASTING FOR SASs.
- TOP OF CONCRETE ROOF (TR) IS 1.25 BELOW TOP OF CASTING UNLESS OTHERWISE NOTED.
- ALL REINFORCED CONCRETE PIPES TO BE CLASS III UNLESS OTHERWISE NOTED.
- SURVEYOR TO CONFIRM THAT ALL INLET STATION / OFFSETS LINE UP WITH PROPOSED CURB AND GUTTER.
-ALL REBAR FOR FIELD POUR STRUCTURES SHALL BE EPOXY COATED. ANY EXPOSED STEEL SHALL BE TOUCHED UP OR RECOATED PRIOR TO USE.
-ALL FIELD POURED SAS STORM STRUCTURES SHALL BE CONSTRUCTED IN ACCORDANCE WITH STANDARD DETAIL DRAWING 5.7.3.
-ALL PRECAST SAS STORM STRUCTURES SHALL BE CONSTRUCTED IN ACCORDANCE WITH STANDARD DETAIL DRAWING 5.7.5.
- ALL STRUCTURES CALLED OUT AS FIELD POURED SHALL BE FIELD POURED. ALL OTHER STRUCTURES (NOT INDICATED AS FIELD POURED) SHALL BE SUBMITTED TO CITY ENGINEERING FOR APPROVAL IF PRECAST STRUCTURES ARE PREFERRED. CONTACT ERIN GETER OF CITY ENGINEERING AT (608) 266-4058 FOR PRECAST APPROVALS, FAX SHOP DRAWINGS TO (608)264-9275, OR EMAIL SHOP DRAWINGS TO EGETER@CITYOFMADISON.COM.

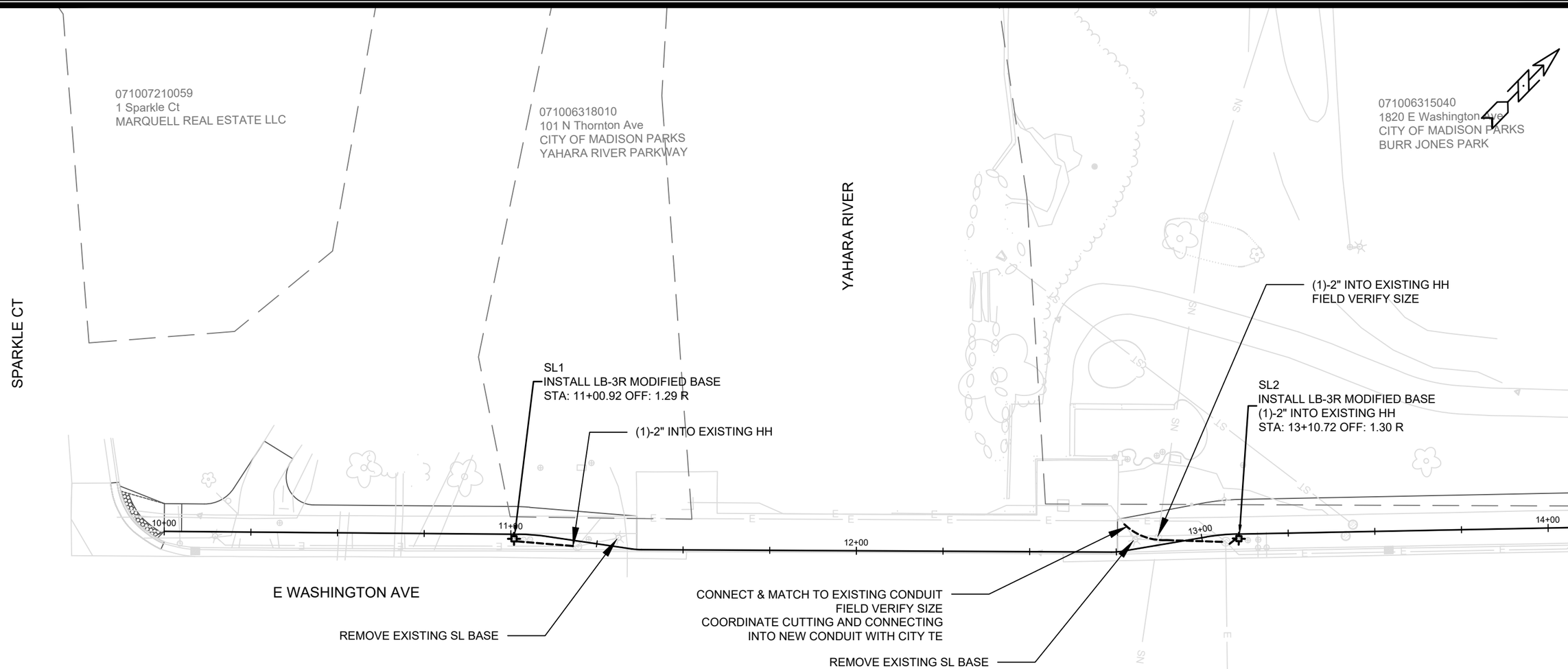


GENERAL ELECTRICAL NOTES:

1. ALL LOCATIONS ARE APPROXIMATE. TRAFFIC ENGINEER SHALL APPROVE FINAL LOCATIONS INCLUDING SETBACK IN THE FIELD. AFTER CONTRACTOR SURVEY STAKING, THE CONTRACTOR SHALL NOTIFY GRETCHEN AVILES PINEIRO (266-4899), AT LEAST 24-HOURS IN ADVANCE OF NEEDING BASE LOCATIONS MARKED.
2. THE CONTRACTOR SHALL DO ALL WORK IN ACCORDANCE WITH CITY OF MADISON STANDARD SPECIFICATIONS FOR PUBLIC WORKS CONSTRUCTION LATEST EDITION AND ALL ADDENDUMS THERETO. HTTPS://WWW.CITYOFMADISON.COM/ENGINEERING/DOCUMENTS/STANDARD-SPECIFICATIONS/COMPLETESPECBOOK.PDF
3. ALL CONDUIT SHALL BE PVC SCHEDULE 80 UNDER PAVEMENT OR SCHEDULE 40 OTHERWISE. PULL WIRE REQUIRED AS PER STANDARD SPECIFICATIONS.
4. THE CONTRACTOR SHALL CALL CITY TE SHOP (266-4767) AT THE TRAFFIC ENGINEERING SHOP AT LEAST 24-HOURS IN ADVANCE OF POURING BASES, BURYING CONDUIT AND INSTALLING CITY FURNISHED STREET LIGHT UNITS TO ARRANGE FOR INSPECTION AND PRIOR TO REMOVING OR CONNECTING TO EXISTING CONDUIT OR HANDHOLES. ANY WORK COMPLETED WITHOUT INSPECTION IS SUBJECT TO REJECTION.
5. THE CONTRACTOR SHALL INSTALL 3#6 & 1#8 WIRES IN ALL NEW CONTRACTOR INSTALLED CONDUIT.
6. THE CONTRACTOR SHALL ARRANGE FOR PICKUP OF THE FOLLOWING CITY MATERIALS:
   1" X 40" ANCHOR BOLTS: 2 SETS OF 4 FOR LB-3R MODIFIED BASES

| MARK | REVISION | DATE | BY |
|---|---|---|---|
| | | | |

Designed By: GMA | Date: 11/10/2025 2:00 PM | Scale: 1"=30' | E-1

15327

MADISON, WI

CONTRACT NO: 8769

ELECTRICAL PLAN

EAST MADISON BIKEWAYS: SAFE STREETS

M:\DESIGN\Projects\15327\CAD\Traffic\15327TE-Electrical.dwg

15327

E-1

| PAVEMENT MARKINGS | |
|---|---|
| 1 | PAVEMENT MARKING EPOXY, LINE, 6–INCH |
| 2 | PAVEMENT MARKING EPOXY, 4–INCH YELLOW SKIPS (3' LINE,9' GAP) |
| 3 | PAVEMENT MARKING EPOXY, CONTINENTAL CROSSWALK, 18–INCH |
| 4 | PAVEMENT MARKING EPOXY, SYMBOL, BIKE SHARROW |
| 5 | PAVEMENT MARKING EPOXY, SYMBOL, BIKE LANE |
| 6 | SKID/SLIP RESISTANT PREFORMED THERMOPLASTIC PAVEMENT MARKING, BIKE LANE GREEN |
| 7 | SKID/SLIP RESISTANT PREFORMED THERMOPLASTIC PAVEMENT MARKING, 6–INCH WHITE RETROREFLECTIVE LINE |
| 8 | PAVEMENT MARKING EPOXY, STOP LINE, 24–INCH |
| 9 | PAVEMENT MARKING EPOXY, SYMBOL, BIKE STRAIGHT ARROW |
| 10 | PAVEMENT MARKING EPOXY, SYMBOL, RIGHT ARROW |
| 11 | PAVEMENT MARKING EPOXY, CROSSWALK, 6–INCH |

Notes: All dimensions are to center of marking and face of curb. Sharrow marking set should mark about 150 ft apart. Sharrow markings shall be 11 ft from face of curb with parking and 4 ft without parking.
For layout questions, contact
Ali Heinritz, aheinritz@cityofmadison.com
608.267.1102

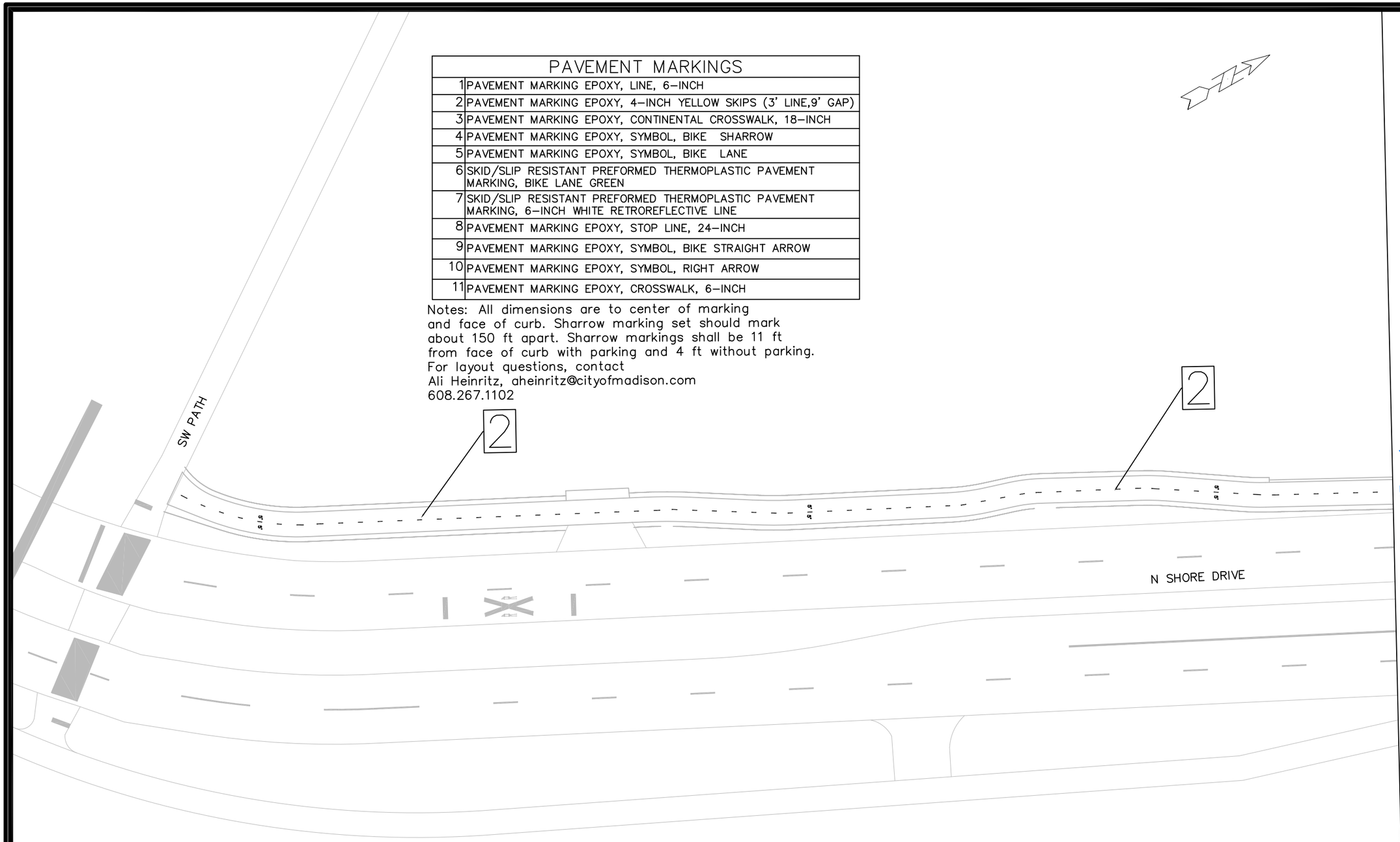


| MARK | REVISION | DATE | BY |
|---|---|---|---|
| – | – | – | – |
| – | – | – | – |
| – | – | – | – |
| – | – | – | – |

Designed By: AJC
Date: 1/16/2025 12:58 PM
Scale: 1" = 40'

15104

15327TE-PAVEMENTMARKING PLANS - N SHORE PATH 1

NORTH SHORE DR PATH

MADISON, WI

CONTRACT NO: 8769

M:\DESIGN\Projects\15327\CAD\Traffic\15327TE-PavementMarking Plans.dwg

15104

M-1

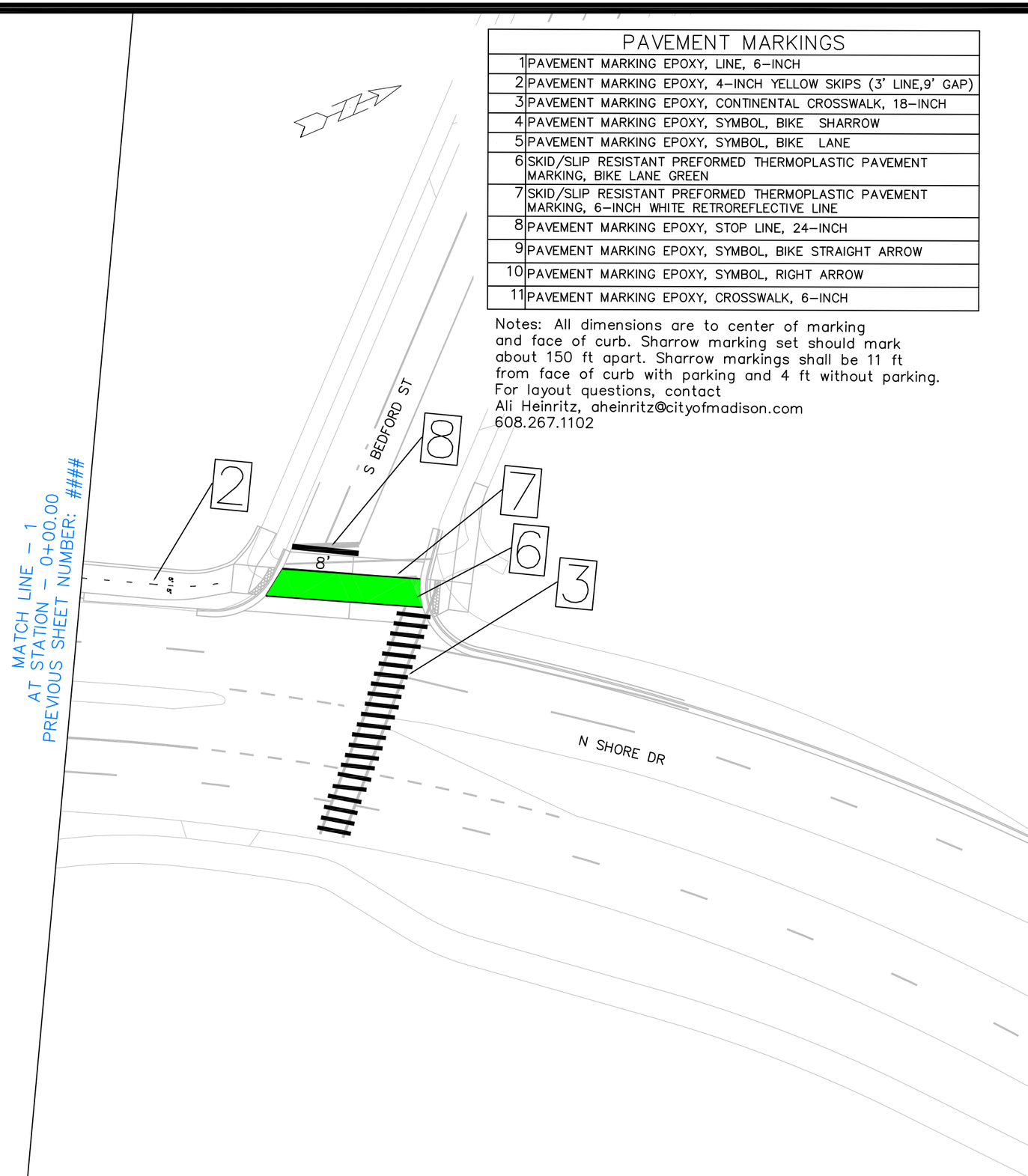


## PAVEMENT MARKINGS

| | |
|---|---|
| 1 | PAVEMENT MARKING EPOXY, LINE, 6-INCH |
| 2 | PAVEMENT MARKING EPOXY, 4-INCH YELLOW SKIPS (3' LINE,9' GAP) |
| 3 | PAVEMENT MARKING EPOXY, CONTINENTAL CROSSWALK, 18-INCH |
| 4 | PAVEMENT MARKING EPOXY, SYMBOL, BIKE SHARROW |
| 5 | PAVEMENT MARKING EPOXY, SYMBOL, BIKE LANE |
| 6 | SKID/SLIP RESISTANT PREFORMED THERMOPLASTIC PAVEMENT MARKING, BIKE LANE GREEN |
| 7 | SKID/SLIP RESISTANT PREFORMED THERMOPLASTIC PAVEMENT MARKING, 6-INCH WHITE RETROREFLECTIVE LINE |
| 8 | PAVEMENT MARKING EPOXY, STOP LINE, 24-INCH |
| 9 | PAVEMENT MARKING EPOXY, SYMBOL, BIKE STRAIGHT ARROW |
| 10 | PAVEMENT MARKING EPOXY, SYMBOL, RIGHT ARROW |
| 11 | PAVEMENT MARKING EPOXY, CROSSWALK, 6-INCH |

Notes: All dimensions are to center of marking and face of curb. Sharrow marking set should mark about 150 ft apart. Sharrow markings shall be 11 ft from face of curb with parking and 4 ft without parking.
For layout questions, contact
Ali Heinritz, aheinritz@cityofmadison.com
608.267.1102

| MARK | REVISION | DATE | BY |
|---|---|---|---|
| - | - | - | - |
| - | - | - | - |
| - | - | - | - |
| - | - | - | - |

Designed By: AJC
Date: 1/16/2025 12:56 PM
Scale: 1" = 40'
15104
M-2

15327TE-PAVEMENTMARKING PLANS - N SHORE PATH 2
15104
NORTH SHORE DR PATH
MADISON, WI
CONTRACT NO: 8769
M:\DESIGN\Projects\15327\CAD\Traffic\15327TE-PavementMarking Plans.dwg

15104
M-2

MATCH LINE – 6
AT STATION – 0+00.00
PREVIOUS SHEET NUMBER: 6

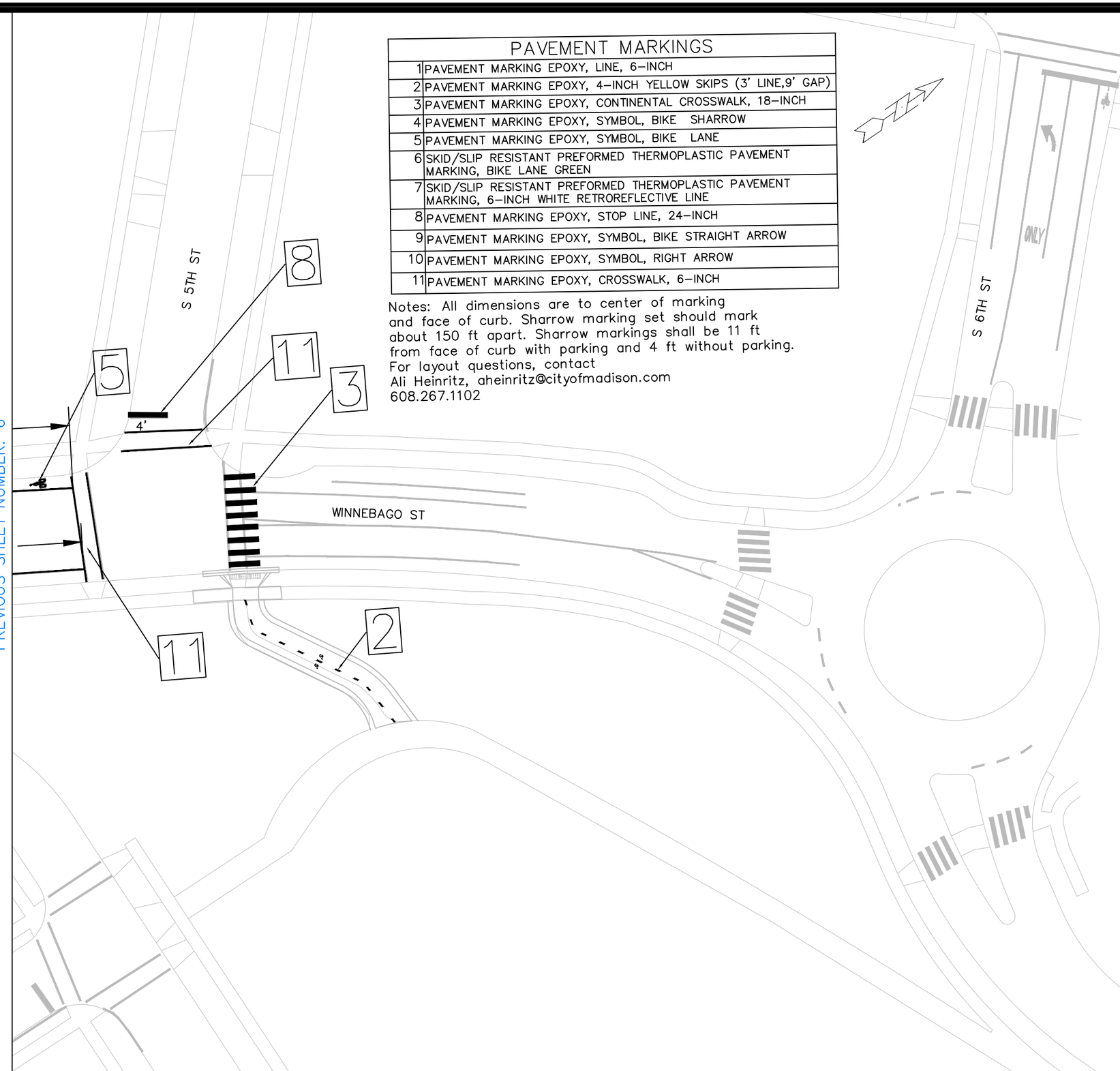


| PAVEMENT MARKINGS | |
|---|---|
| 1 | PAVEMENT MARKING EPOXY, LINE, 6–INCH |
| 2 | PAVEMENT MARKING EPOXY, 4–INCH YELLOW SKIPS (3' LINE,9' GAP) |
| 3 | PAVEMENT MARKING EPOXY, CONTINENTAL CROSSWALK, 18–INCH |
| 4 | PAVEMENT MARKING EPOXY, SYMBOL, BIKE SHARROW |
| 5 | PAVEMENT MARKING EPOXY, SYMBOL, BIKE LANE |
| 6 | SKID/SLIP RESISTANT PREFORMED THERMOPLASTIC PAVEMENT MARKING, BIKE LANE GREEN |
| 7 | SKID/SLIP RESISTANT PREFORMED THERMOPLASTIC PAVEMENT MARKING, 6–INCH WHITE RETROREFLECTIVE LINE |
| 8 | PAVEMENT MARKING EPOXY, STOP LINE, 24–INCH |
| 9 | PAVEMENT MARKING EPOXY, SYMBOL, BIKE STRAIGHT ARROW |
| 10 | PAVEMENT MARKING EPOXY, SYMBOL, RIGHT ARROW |
| 11 | PAVEMENT MARKING EPOXY, CROSSWALK, 6–INCH |

Notes: All dimensions are to center of marking and face of curb. Sharrow marking set should mark about 150 ft apart. Sharrow markings shall be 11 ft from face of curb with parking and 4 ft without parking.
For layout questions, contact
Ali Heinritz, aheinritz@cityofmadison.com
608.267.1102

| MARK | REVISION | DATE | BY |
|---|---|---|---|
| --- | --- | --- | --- |
| --- | --- | --- | --- |
| --- | --- | --- | --- |
| --- | --- | --- | --- |

Designed By: AJC
Date: 1/16/2025 10:12 AM
Scale: 1" = 40'

15327

M-3

15327TE-PAVEMENTMARKING PLANS - WINNEBAGO PATH 1

15327

EAST MADISON BIKEWAYS: SAFE STREETS

MADISON, WI

CONTRACT NO: 8769

M:\DESIGN\Projects\15327\CAD\Traffic\15327TE-PavementMarking Plans.dwg

15327

M-3

| PAVEMENT MARKINGS | |
|---|---|
| 1 | PAVEMENT MARKING EPOXY, LINE, 6–INCH |
| 2 | PAVEMENT MARKING EPOXY, 4–INCH YELLOW SKIPS (3' LINE,9' GAP) |
| 3 | PAVEMENT MARKING EPOXY, CONTINENTAL CROSSWALK, 18–INCH |
| 4 | PAVEMENT MARKING EPOXY, SYMBOL, BIKE SHARROW |
| 5 | PAVEMENT MARKING EPOXY, SYMBOL, BIKE LANE |
| 6 | SKID/SLIP RESISTANT PREFORMED THERMOPLASTIC PAVEMENT MARKING, BIKE LANE GREEN |
| 7 | SKID/SLIP RESISTANT PREFORMED THERMOPLASTIC PAVEMENT MARKING, 6–INCH WHITE RETROREFLECTIVE LINE |
| 8 | PAVEMENT MARKING EPOXY, STOP LINE, 24–INCH |
| 9 | PAVEMENT MARKING EPOXY, SYMBOL, BIKE STRAIGHT ARROW |
| 10 | PAVEMENT MARKING EPOXY, SYMBOL, RIGHT ARROW |
| 11 | PAVEMENT MARKING EPOXY, CROSSWALK, 6–INCH |

Notes: All dimensions are to center of marking and face of curb. Sharrow marking set should mark about 150 ft apart. Sharrow markings shall be 11 ft from face of curb with parking and 4 ft without parking.
For layout questions, contact
Ali Heinritz, aheinritz@cityofmadison.com
608.267.1102

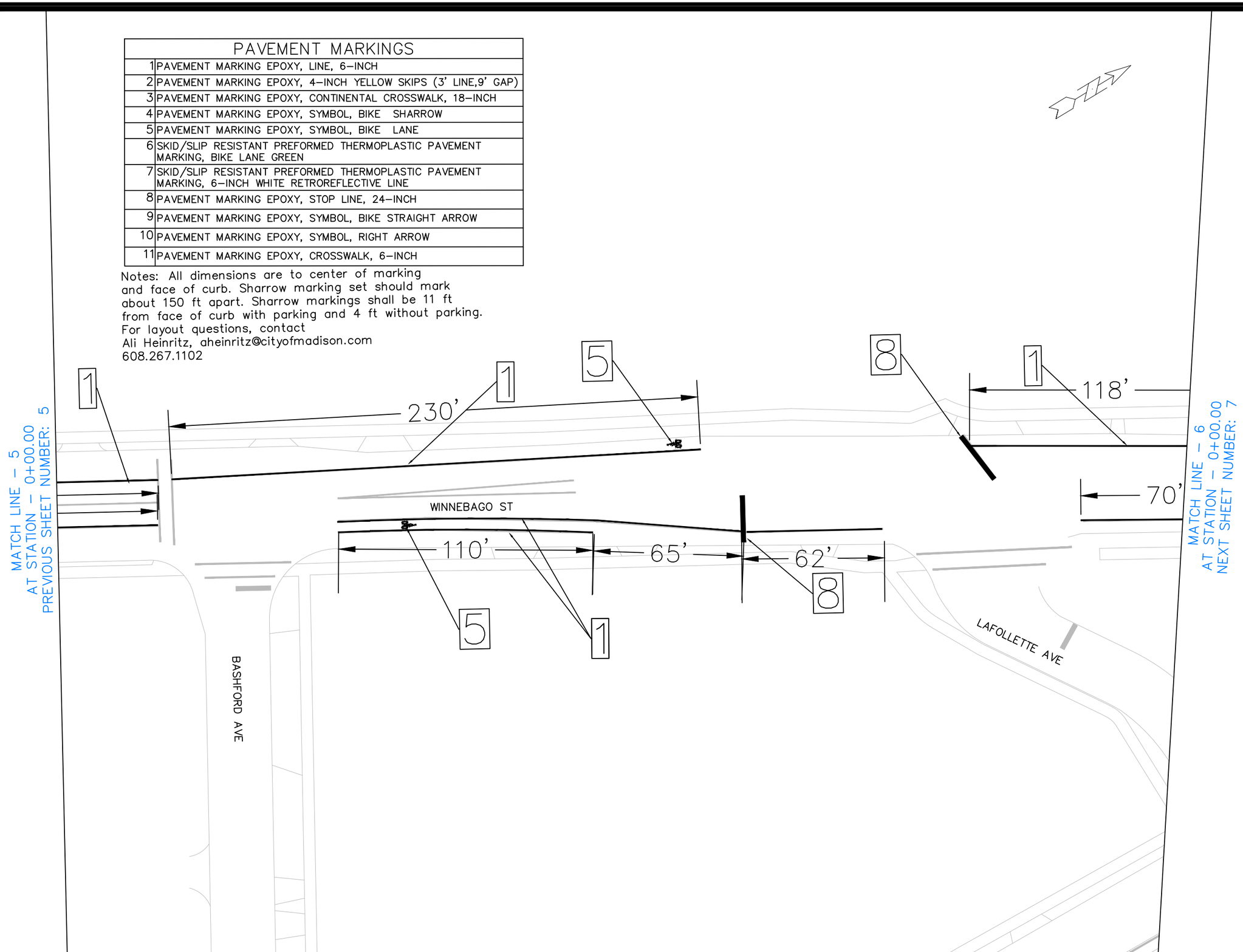


| MARK | REVISION | DATE | BY |
|---|---|---|---|
| --- | --- | --- | --- |
| --- | --- | --- | --- |
| --- | --- | --- | --- |
| --- | --- | --- | --- |
| --- | --- | --- | --- |

Designed By: AJC | Date: 1/16/2025 10:16 AM | Scale: 1" = 40'
15327

15327

MADISON, WI

CONTRACT NO: 8769

15327TE-PAVEMENTMARKING PLANS - WINNEBAGO PATH 2

EAST MADISON BIKEWAYS: SAFE STREETS

M:\DESIGN\Projects\15327\CAD\Traffic\15327TE-PavementMarking Plans.dwg

15327

M-4

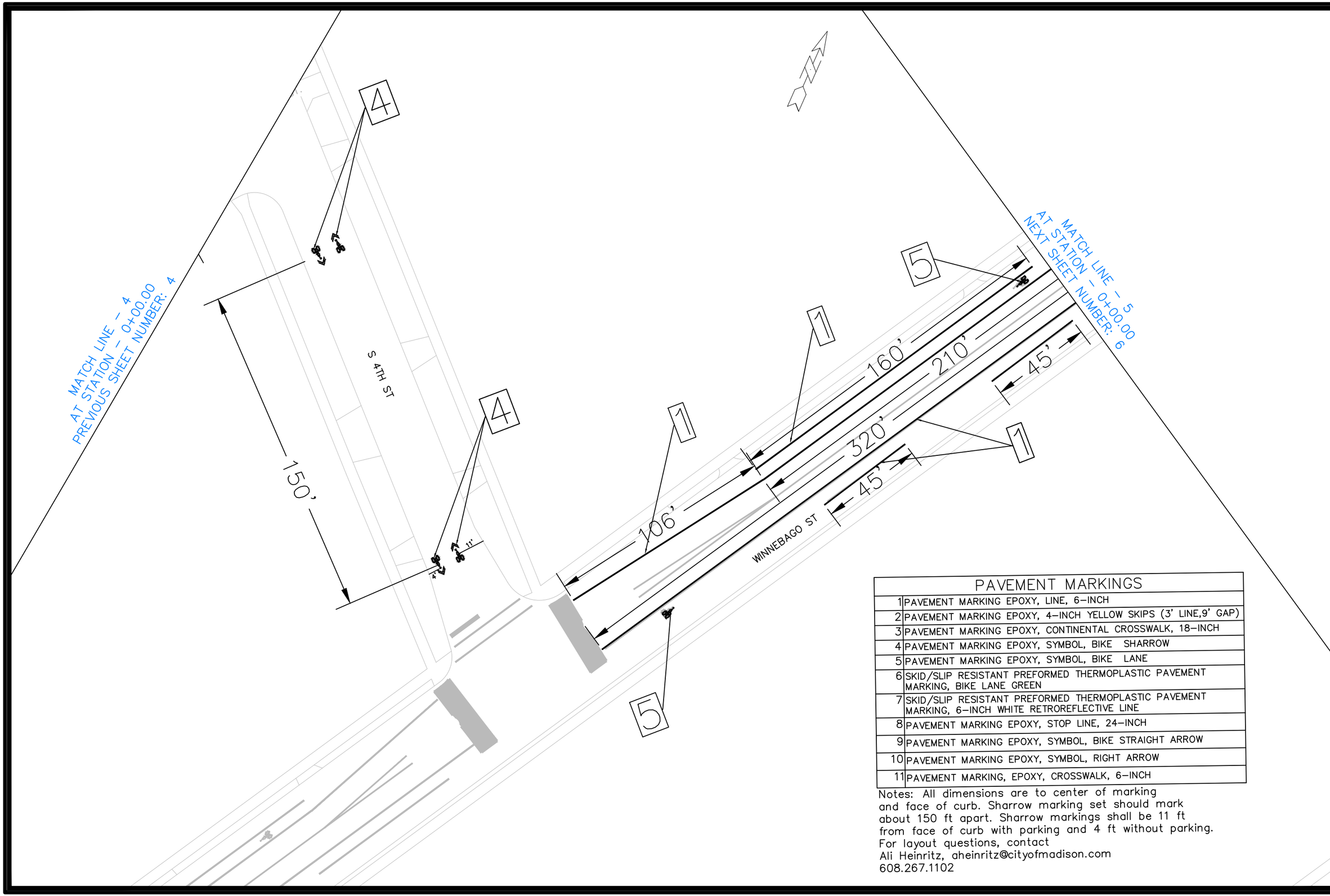


| PAVEMENT MARKINGS | |
|---|---|
| 1 | PAVEMENT MARKING EPOXY, LINE, 6–INCH |
| 2 | PAVEMENT MARKING EPOXY, 4–INCH YELLOW SKIPS (3' LINE,9' GAP) |
| 3 | PAVEMENT MARKING EPOXY, CONTINENTAL CROSSWALK, 18–INCH |
| 4 | PAVEMENT MARKING EPOXY, SYMBOL, BIKE SHARROW |
| 5 | PAVEMENT MARKING EPOXY, SYMBOL, BIKE LANE |
| 6 | SKID/SLIP RESISTANT PREFORMED THERMOPLASTIC PAVEMENT MARKING, BIKE LANE GREEN |
| 7 | SKID/SLIP RESISTANT PREFORMED THERMOPLASTIC PAVEMENT MARKING, 6–INCH WHITE RETROREFLECTIVE LINE |
| 8 | PAVEMENT MARKING EPOXY, STOP LINE, 24–INCH |
| 9 | PAVEMENT MARKING EPOXY, SYMBOL, BIKE STRAIGHT ARROW |
| 10 | PAVEMENT MARKING EPOXY, SYMBOL, RIGHT ARROW |
| 11 | PAVEMENT MARKING, EPOXY, CROSSWALK, 6–INCH |

Notes: All dimensions are to center of marking and face of curb. Sharrow marking set should mark about 150 ft apart. Sharrow markings shall be 11 ft from face of curb with parking and 4 ft without parking.
For layout questions, contact
Ali Heinritz, aheinritz@cityofmadison.com
608.267.1102

| MARK | REVISION | DATE | BY |
|---|---|---|---|
| --- | --- | --- | --- |
| --- | --- | --- | --- |
| --- | --- | --- | --- |
| --- | --- | --- | --- |

Designed By: AJC | Date: 1/16/2025 10:19 AM | Scale: 1" = 40'

15327

15327TE-PAVEMENTMARKING PLANS - WINNEBAGO-FOURTH ST 15327

EAST MADISON BIKEWAYS: SAFE STREETS

MADISON, WI

CONTRACT NO: 8769

M:\DESIGN\Projects\15327\CAD\Traffic\15327TE-PavementMarking Plans.dwg

15327

M-5

| PAVEMENT MARKINGS | |
|---|---|
| 1 | PAVEMENT MARKING EPOXY, LINE, 6–INCH |
| 2 | PAVEMENT MARKING EPOXY, 4–INCH YELLOW SKIPS (3' LINE,9' GAP) |
| 3 | PAVEMENT MARKING EPOXY, CONTINENTAL CROSSWALK, 18–INCH |
| 4 | PAVEMENT MARKING EPOXY, SYMBOL, BIKE SHARROW |
| 5 | PAVEMENT MARKING EPOXY, SYMBOL, BIKE LANE |
| 6 | SKID/SLIP RESISTANT PREFORMED THERMOPLASTIC PAVEMENT MARKING, BIKE LANE GREEN |
| 7 | SKID/SLIP RESISTANT PREFORMED THERMOPLASTIC PAVEMENT MARKING, 6–INCH WHITE RETROREFLECTIVE LINE |
| 8 | PAVEMENT MARKING EPOXY, STOP LINE, 24–INCH |
| 9 | PAVEMENT MARKING EPOXY, SYMBOL, BIKE STRAIGHT ARROW |
| 10 | PAVEMENT MARKING EPOXY, SYMBOL, RIGHT ARROW |
| 11 | PAVEMENT MARKING EPOXY, CROSSWALK, 6–INCH |

Notes: All dimensions are to center of marking and face of curb. Sharrow marking set should mark about 150 ft apart. Sharrow markings shall be 11 ft from face of curb with parking and 4 ft without parking.
For layout questions, contact
Ali Heinritz, aheinritz@cityofmadison.com
608.267.1102

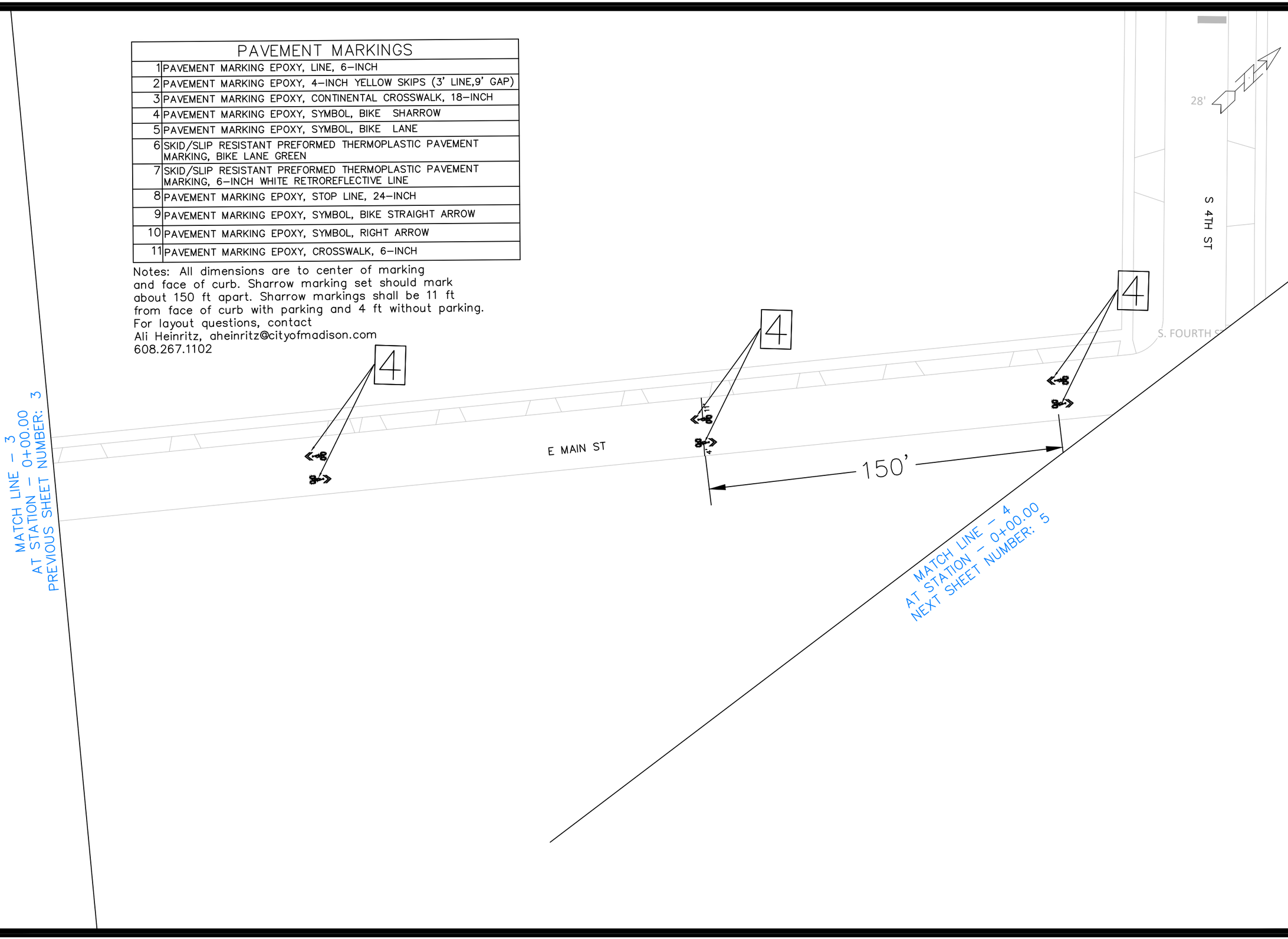


| MARK | REVISION | DATE | BY |
|---|---|---|---|
| --- | --- | --- | --- |
| --- | --- | --- | --- |
| --- | --- | --- | --- |
| --- | --- | --- | --- |

Designed By: AJC
Date: 1/16/2025 10:23 AM
Scale: 1" = 40'

15327

M-6

15327

MADISON, WI

CONTRACT NO: 8769

15327TE-PAVEMENTMARKING PLANS - MAIN ST 1

EAST MADISON BIKEWAYS: SAFE STREETS

M:\DESIGN\Projects\15327\CAD\Traffic\15327TE-PavementMarking Plans.dwg

15327

M-6

| PAVEMENT MARKINGS | |
|---|---|
| 1 | PAVEMENT MARKING EPOXY, LINE, 6–INCH |
| 2 | PAVEMENT MARKING EPOXY, 4–INCH YELLOW SKIPS (3' LINE,9' GAP) |
| 3 | PAVEMENT MARKING EPOXY, CONTINENTAL CROSSWALK, 18–INCH |
| 4 | PAVEMENT MARKING EPOXY, SYMBOL, BIKE SHARROW |
| 5 | PAVEMENT MARKING EPOXY, SYMBOL, BIKE LANE |
| 6 | SKID/SLIP RESISTANT PREFORMED THERMOPLASTIC PAVEMENT MARKING, BIKE LANE GREEN |
| 7 | SKID/SLIP RESISTANT PREFORMED THERMOPLASTIC PAVEMENT MARKING, 6–INCH WHITE RETROREFLECTIVE LINE |
| 8 | PAVEMENT MARKING EPOXY, STOP LINE, 24–INCH |
| 9 | PAVEMENT MARKING EPOXY, SYMBOL, BIKE STRAIGHT ARROW |
| 10 | PAVEMENT MARKING EPOXY, SYMBOL, RIGHT ARROW |
| 11 | PAVEMENT MARKING EPOXY, CROSSWALK, 6–INCH |

Notes: All dimensions are to center of marking and face of curb. Sharrow marking set should mark about 150 ft apart. Sharrow markings shall be 11 ft from face of curb with parking and 4 ft without parking.
For layout questions, contact
Ali Heinritz, aheinritz@cityofmadison.com
608.267.1102

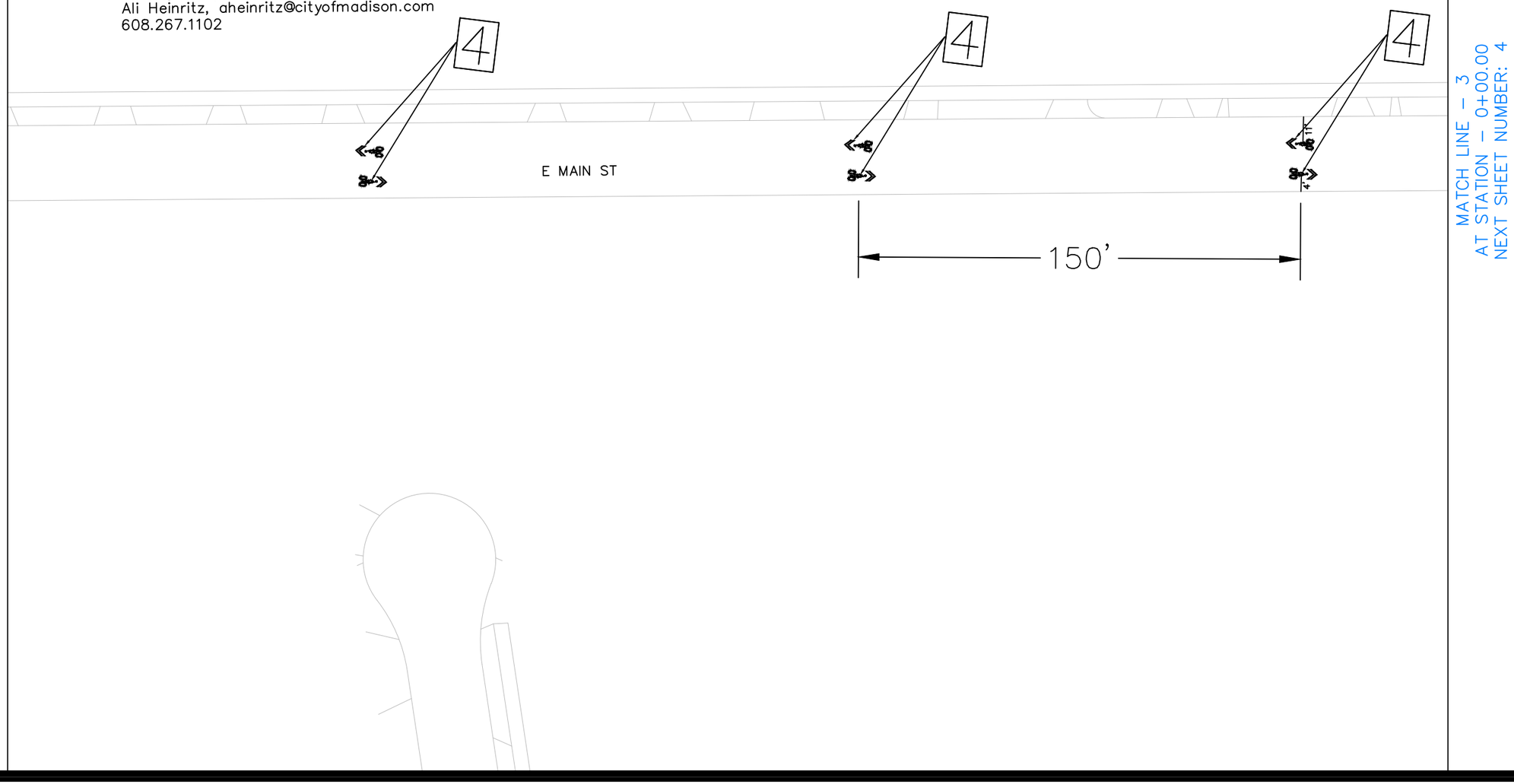


| MARK | REVISION | DATE | BY |
|---|---|---|---|
| --- | --- | --- | --- |
| --- | --- | --- | --- |
| --- | --- | --- | --- |
| --- | --- | --- | --- |

Designed By: AJC | Date: 1/16/2025 10:26 AM | Scale: 1" = 40'

15327 | M-7

15327

MADISON, WI

CONTRACT NO: 8769

15327TE-PAVEMENTMARKING PLANS - MAIN ST 2

EAST MADISON BIKEWAYS: SAFE STREETS

M:\DESIGN\Projects\15327\CAD\Traffic\15327TE-PavementMarking Plans.dwg

15327

M-7

| PAVEMENT MARKINGS | |
|---|---|
| 1 | PAVEMENT MARKING EPOXY, LINE, 6–INCH |
| 2 | PAVEMENT MARKING EPOXY, 4–INCH YELLOW SKIPS (3' LINE,9' GAP) |
| 3 | PAVEMENT MARKING EPOXY, CONTINENTAL CROSSWALK, 18–INCH |
| 4 | PAVEMENT MARKING EPOXY, SYMBOL, BIKE SHARROW |
| 5 | PAVEMENT MARKING EPOXY, SYMBOL, BIKE LANE |
| 6 | SKID/SLIP RESISTANT PREFORMED THERMOPLASTIC PAVEMENT MARKING, BIKE LANE GREEN |
| 7 | SKID/SLIP RESISTANT PREFORMED THERMOPLASTIC PAVEMENT MARKING, 6–INCH WHITE RETROREFLECTIVE LINE |
| 8 | PAVEMENT MARKING EPOXY, STOP LINE, 24–INCH |
| 9 | PAVEMENT MARKING EPOXY, SYMBOL, BIKE STRAIGHT ARROW |
| 10 | PAVEMENT MARKING EPOXY, SYMBOL, RIGHT ARROW |
| 11 | PAVEMENT MARKING EPOXY, CROSSWALK, 6–INCH |

Notes: All dimensions are to center of marking and face of curb. Sharrow marking set should mark about 150 ft apart. Sharrow markings shall be 11 ft from face of curb with parking and 4 ft without parking.
For layout questions, contact
Ali Heinritz, aheinritz@cityofmadison.com
608.267.1102

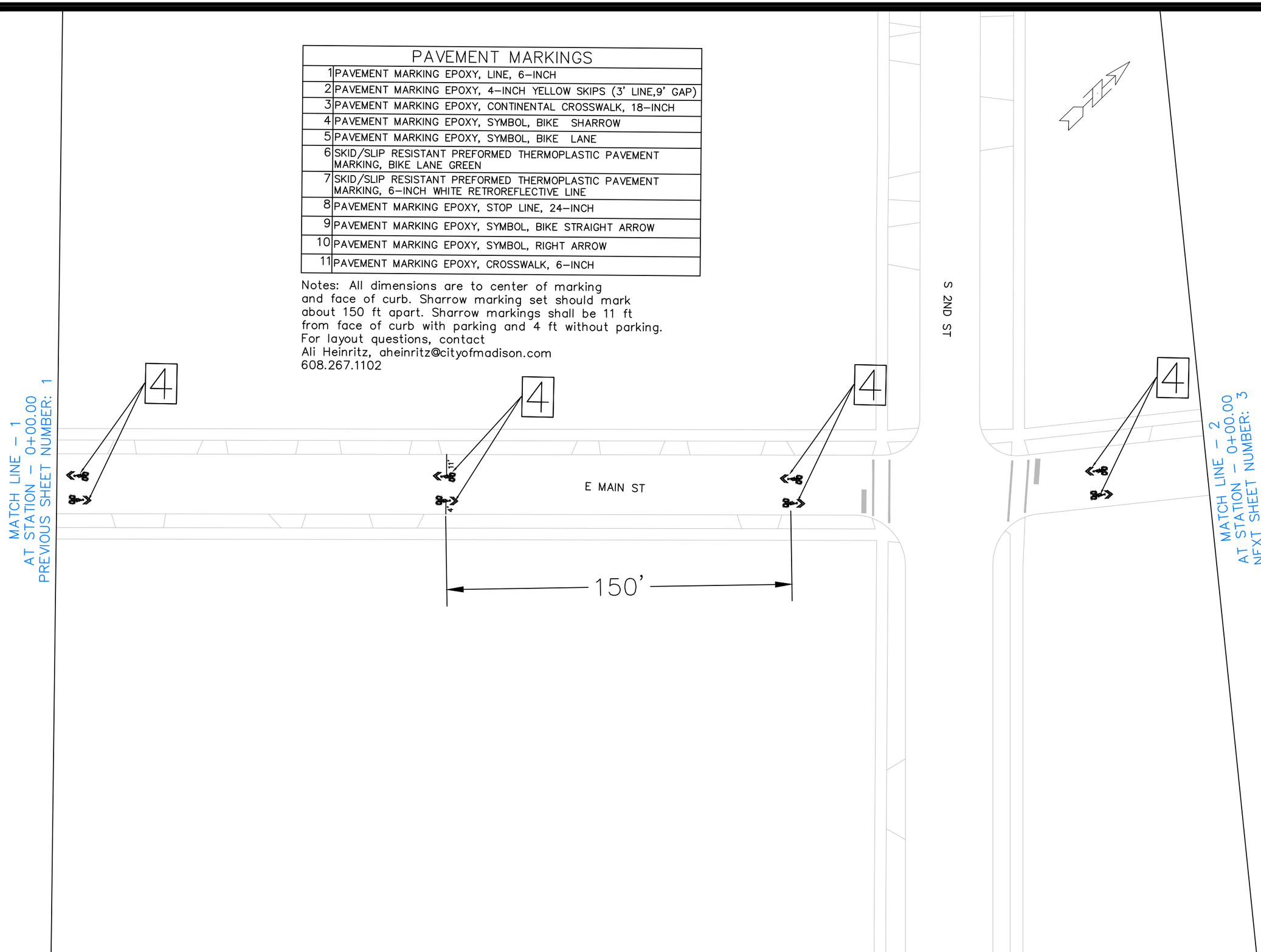


| MARK | REVISION | DATE | BY |
|---|---|---|---|
| --- | --- | --- | --- |
| --- | --- | --- | --- |
| --- | --- | --- | --- |
| --- | --- | --- | --- |

Designed By: AJC
Date: 1/16/2025 10:29 AM
Scale: 1" = 40'

15327

15327TE-PAVEMENTMARKING PLANS - MAIN ST 3

EAST MADISON BIKEWAYS: SAFE STREETS

M:\DESIGN\Projects\15327\CAD\Traffic\15327TE-PavementMarking Plans.dwg

MADISON, WI

CONTRACT NO: 8769

15327

M-8

| PAVEMENT MARKINGS | |
|---|---|
| 1 | PAVEMENT MARKING EPOXY, LINE, 6–INCH |
| 2 | PAVEMENT MARKING EPOXY, 4–INCH YELLOW SKIPS (3' LINE,9' GAP) |
| 3 | PAVEMENT MARKING EPOXY, CONTINENTAL CROSSWALK, 18–INCH |
| 4 | PAVEMENT MARKING EPOXY, SYMBOL, BIKE SHARROW |
| 5 | PAVEMENT MARKING EPOXY, SYMBOL, BIKE LANE |
| 6 | SKID/SLIP RESISTANT PREFORMED THERMOPLASTIC PAVEMENT MARKING, BIKE LANE GREEN |
| 7 | SKID/SLIP RESISTANT PREFORMED THERMOPLASTIC PAVEMENT MARKING, 6–INCH WHITE RETROREFLECTIVE LINE |
| 8 | PAVEMENT MARKING EPOXY, STOP LINE, 24–INCH |
| 9 | PAVEMENT MARKING EPOXY, SYMBOL, BIKE STRAIGHT ARROW |
| 10 | PAVEMENT MARKING EPOXY, SYMBOL, RIGHT ARROW |
| 11 | PAVEMENT MARKING EPOXY, CROSSWALK, 6–INCH |

Notes: All dimensions are to center of marking and face of curb. Sharrow marking sets should mark about 150 ft apart. Sharrow markings shall be 11 ft from face of curb with parking and 4 ft without parking.
For layout questions, contact
Ali Heinritz, aheinritz@cityofmadison.com
608.267.1102

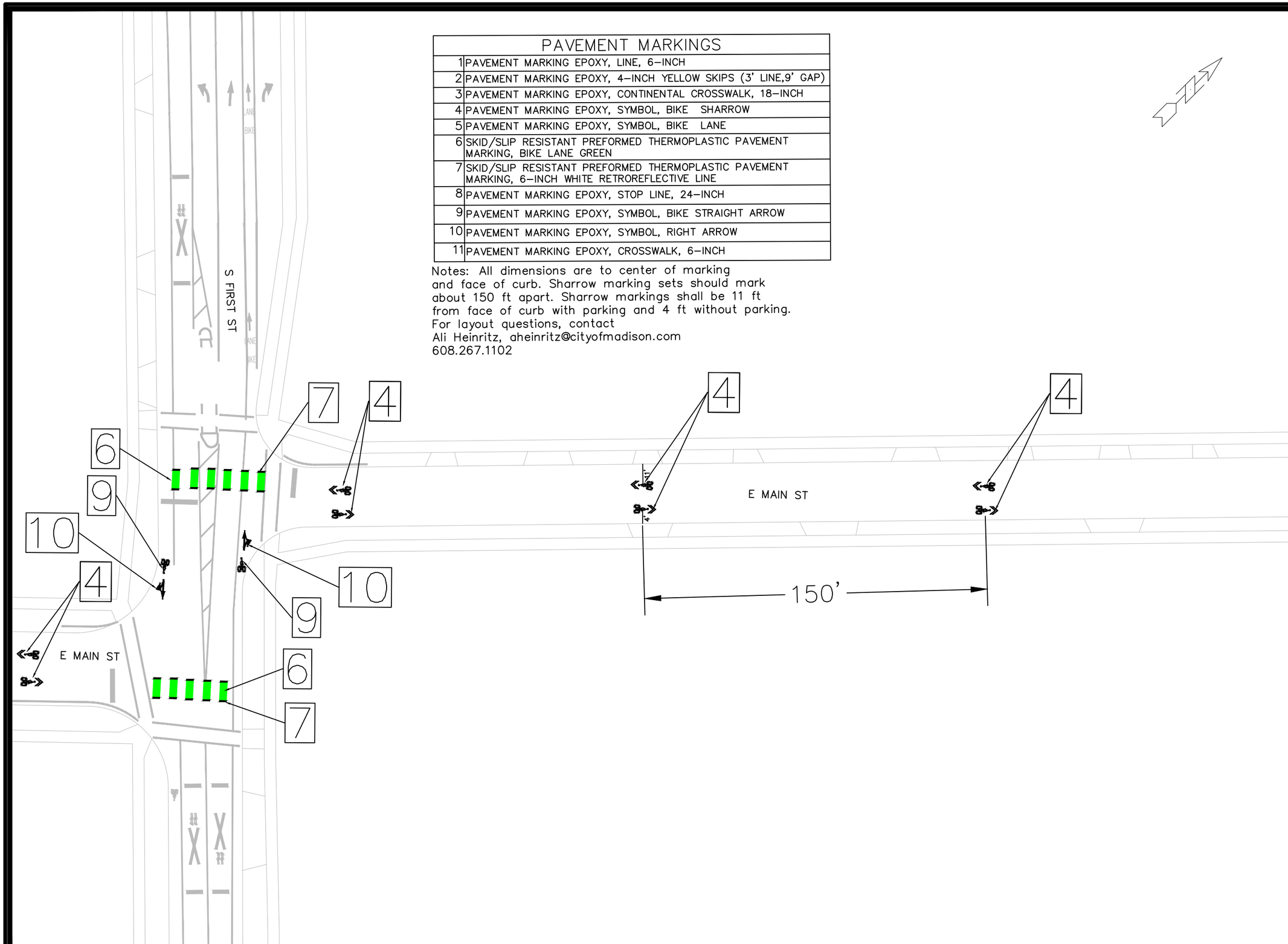


| MARK | REVISION | DATE | BY |
|---|---|---|---|
| --- | --- | --- | --- |
| --- | --- | --- | --- |
| --- | --- | --- | --- |
| --- | --- | --- | --- |

Designed By: AJC
Date: 1/16/2025 10:33 AM
Scale: 1" = 40'

15327

MADISON, WI

CONTRACT NO: 8769

15327TE-PAVEMENTMARKING PLANS - MAIN ST 4

EAST MADISON BIKEWAYS: SAFE STREETS

M:\DESIGN\Projects\15327\CAD\Traffic\15327TE-PavementMarking Plans.dwg

15327

M-9

MATCH LINE – 3
AT STATION – 0+00.00
PREVIOUS SHEET NUMBER: ####

| PAVEMENT MARKINGS | |
|---|---|
| 1 | PAVEMENT MARKING EPOXY, LINE, 6–INCH |
| 2 | PAVEMENT MARKING EPOXY, 4–INCH YELLOW SKIPS (3' LINE,9' GAP) |
| 3 | PAVEMENT MARKING EPOXY, CONTINENTAL CROSSWALK, 18–INCH |
| 4 | PAVEMENT MARKING EPOXY, SYMBOL, BIKE SHARROW |
| 5 | PAVEMENT MARKING EPOXY, SYMBOL, BIKE LANE |
| 6 | SKID/SLIP RESISTANT PREFORMED THERMOPLASTIC PAVEMENT MARKING, BIKE LANE GREEN |
| 7 | SKID/SLIP RESISTANT PREFORMED THERMOPLASTIC PAVEMENT MARKING, 6–INCH WHITE RETROREFLECTIVE LINE |
| 8 | PAVEMENT MARKING EPOXY, STOP LINE, 24–INCH |
| 9 | PAVEMENT MARKING EPOXY, SYMBOL, BIKE STRAIGHT ARROW |
| 10 | PAVEMENT MARKING EPOXY, SYMBOL, RIGHT ARROW |
| 11 | PAVEMENT MARKING EPOXY, CROSSWALK, 6–INCH |

Notes: All dimensions are to center of marking and face of curb. Sharrow marking set should mark about 150 ft apart. Sharrow markings shall be 11 ft from face of curb with parking and 4 ft without parking.
For layout questions, contact
Ali Heinritz, aheinritz@cityofmadison.com
608.267.1102

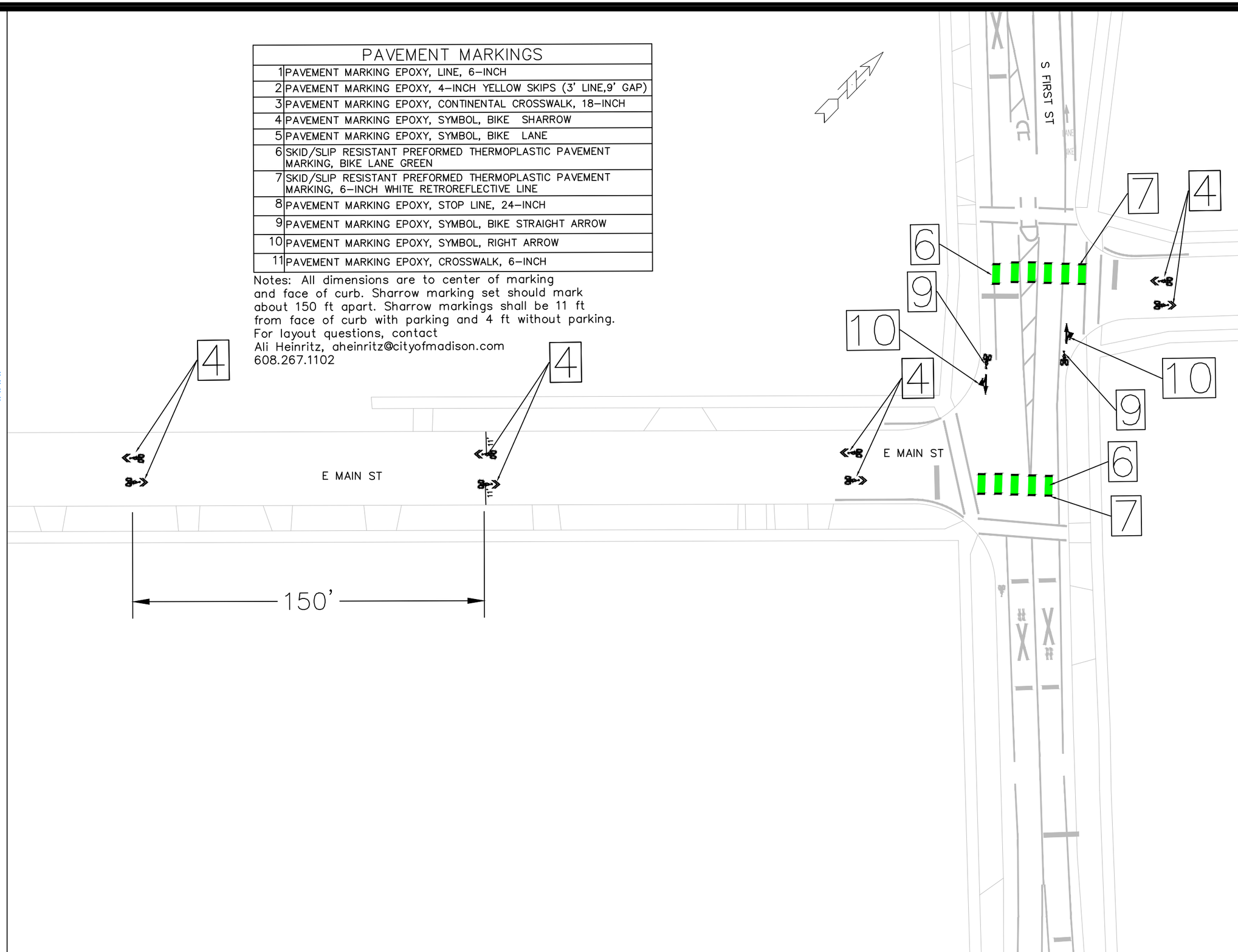


| MARK | REVISION | DATE | BY |
|---|---|---|---|
| --- | --- | --- | --- |
| --- | --- | --- | --- |
| --- | --- | --- | --- |
| --- | --- | --- | --- |
| --- | --- | --- | --- |

Designed By: AJC | Date: 1/16/2025 10:36 AM | Scale: 1" = 40'
15327 | M-10

15327

MADISON, WI

CONTRACT NO: 8769

15327TE-PAVEMENTMARKING PLANS - MAIN ST 5

EAST MADISON BIKEWAYS: SAFE STREETS

M:\DESIGN\Projects\15327\CAD\Traffic\15327TE-PavementMarking Plans.dwg

15327

M-10

MATCH LINE – 2
AT STATION – 0+00.00
PREVIOUS SHEET NUMBER: ####

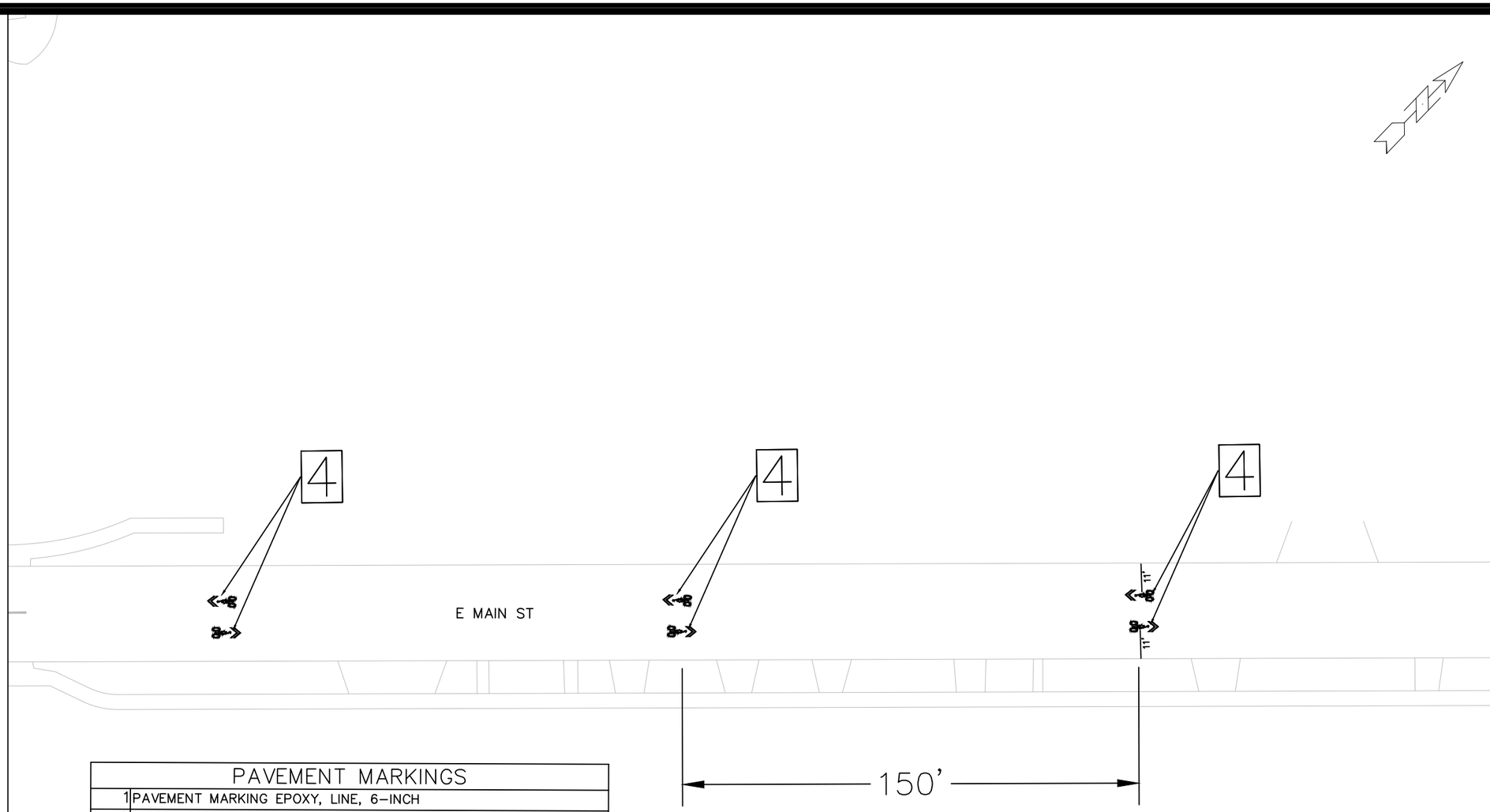


MATCH LINE – 3
AT STATION – 0+00.00
NEXT SHEET NUMBER: ####

| PAVEMENT MARKINGS | |
|---|---|
| 1 | PAVEMENT MARKING EPOXY, LINE, 6–INCH |
| 2 | PAVEMENT MARKING EPOXY, 4–INCH YELLOW SKIPS (3' LINE,9' GAP) |
| 3 | PAVEMENT MARKING EPOXY, CONTINENTAL CROSSWALK, 18–INCH |
| 4 | PAVEMENT MARKING EPOXY, SYMBOL, BIKE SHARROW |
| 5 | PAVEMENT MARKING EPOXY, SYMBOL, BIKE LANE |
| 6 | SKID/SLIP RESISTANT PREFORMED THERMOPLASTIC PAVEMENT MARKING, BIKE LANE GREEN |
| 7 | SKID/SLIP RESISTANT PREFORMED THERMOPLASTIC PAVEMENT MARKING, 6–INCH WHITE RETROREFLECTIVE LINE |
| 8 | PAVEMENT MARKING EPOXY, STOP LINE, 24–INCH |
| 9 | PAVEMENT MARKING EPOXY, SYMBOL, BIKE STRAIGHT ARROW |
| 10 | PAVEMENT MARKING EPOXY, SYMBOL, RIGHT ARROW |
| 11 | PAVEMENT MARKING EPOXY, CROSSWALK, 6–INCH |

Notes: All dimensions are to center of marking and face of curb. Sharrow marking set should mark about 150 ft apart. Sharrow markings shall be 11 ft from face of curb with parking and 4 ft without parking.
For layout questions, contact
Ali Heinritz, aheinritz@cityofmadison.com
608.267.1102

15327TE-PAVEMENTMARKING PLANS - MAIN ST 6

EAST MADISON BIKEWAYS: SAFE STREETS

M:\DESIGN\Projects\15327\CAD\Traffic\15327TE-PavementMarking Plans.dwg

15327

MADISON, WI

CONTRACT NO: 8769

| MARK | REVISION | DATE | BY |
|---|---|---|---|
| --- | --- | --- | --- |
| --- | --- | --- | --- |
| --- | --- | --- | --- |
| --- | --- | --- | --- |

Designed By: AJC | Date: 1/16/2025 10:39 AM | Scale: 1" = 40'

15327 | M-11

| PAVEMENT MARKINGS | |
|---|---|
| 1 | PAVEMENT MARKING EPOXY, LINE, 6–INCH |
| 2 | PAVEMENT MARKING EPOXY, 4–INCH YELLOW SKIPS (3' LINE,9' GAP) |
| 3 | PAVEMENT MARKING EPOXY, CONTINENTAL CROSSWALK, 18–INCH |
| 4 | PAVEMENT MARKING EPOXY, SYMBOL, BIKE SHARROW |
| 5 | PAVEMENT MARKING EPOXY, SYMBOL, BIKE LANE |
| 6 | SKID/SLIP RESISTANT PREFORMED THERMOPLASTIC PAVEMENT MARKING, BIKE LANE GREEN |
| 7 | SKID/SLIP RESISTANT PREFORMED THERMOPLASTIC PAVEMENT MARKING, 6–INCH WHITE RETROREFLECTIVE LINE |
| 8 | PAVEMENT MARKING EPOXY, STOP LINE, 24–INCH |
| 9 | PAVEMENT MARKING EPOXY, SYMBOL, BIKE STRAIGHT ARROW |
| 10 | PAVEMENT MARKING EPOXY, SYMBOL, RIGHT ARROW |
| 11 | PAVEMENT MARKING, EPOXY, CROSSWALK, 6–INCH |

Notes: All dimensions are to center of marking and face of curb. Sharrow marking set should mark about 150 ft apart. Sharrow markings shall be 11 ft from face of curb with parking and 4 ft without parking.
For layout questions, contact
Ali Heinritz, aheinritz@cityofmadison.com
608.267.1102

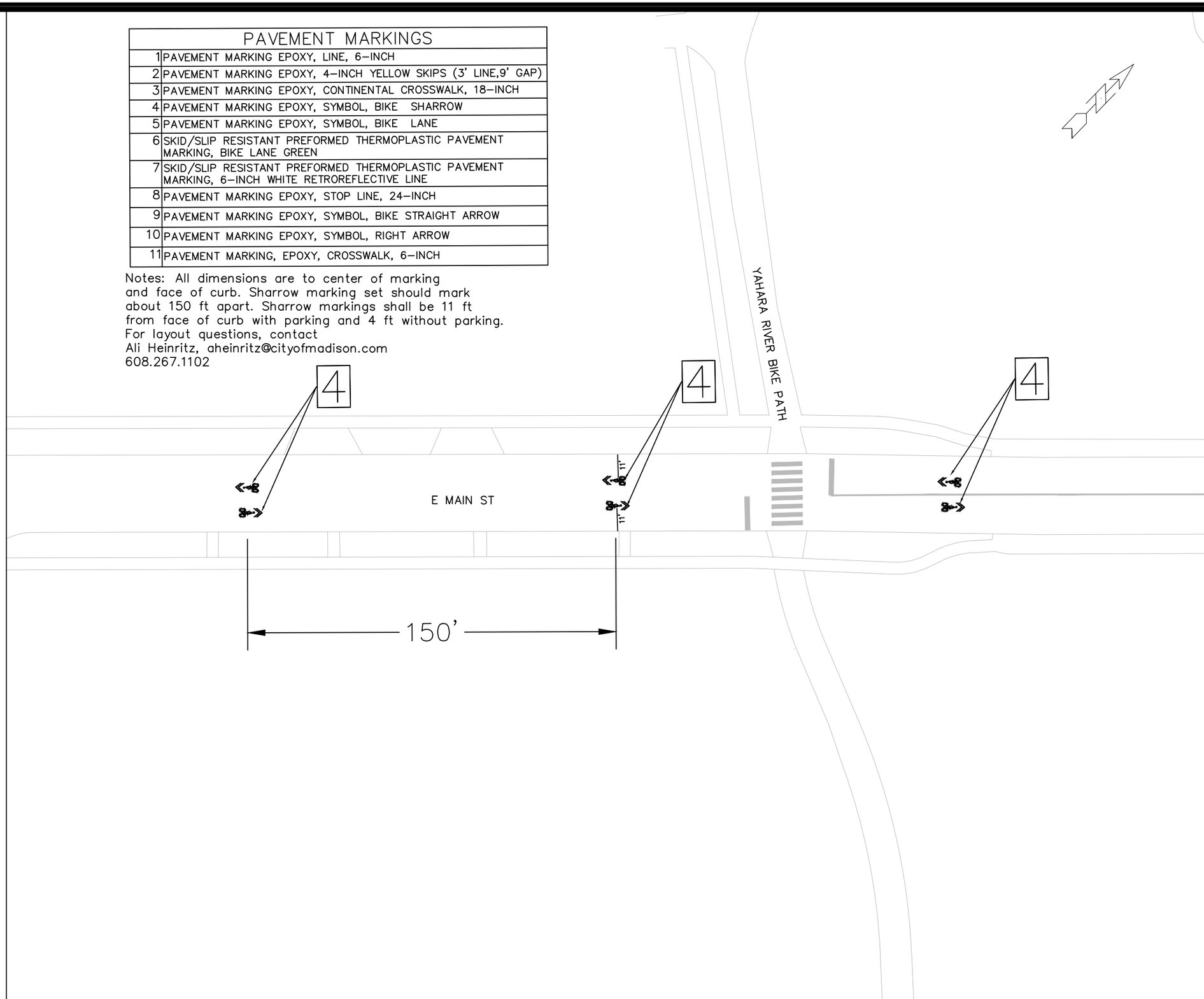


| MARK | REVISION | DATE | BY |
|---|---|---|---|
| --- | --- | --- | --- |
| --- | --- | --- | --- |
| --- | --- | --- | --- |
| --- | --- | --- | --- |

Designed By: AJC | Date: 1/16/2025 10:43 AM | Scale: 1" = 40'

15327

15327TE-PAVEMENTMARKING PLANS - MAIN ST 7

MADISON, WI

EAST MADISON BIKEWAYS: SAFE STREETS

CONTRACT NO: 8769

M:\DESIGN\Projects\15327\CAD\Traffic\15327TE-PavementMarking Plans.dwg

15327

M-12

| PAVEMENT MARKINGS | |
|---|---|
| 1 | PAVEMENT MARKING EPOXY, LINE, 6–INCH |
| 2 | PAVEMENT MARKING EPOXY, 4–INCH YELLOW SKIPS (3' LINE,9' GAP) |
| 3 | PAVEMENT MARKING EPOXY, CONTINENTAL CROSSWALK, 18–INCH |
| 4 | PAVEMENT MARKING EPOXY, SYMBOL, BIKE SHARROW |
| 5 | PAVEMENT MARKING EPOXY, SYMBOL, BIKE LANE |
| 6 | SKID/SLIP RESISTANT PREFORMED THERMOPLASTIC PAVEMENT MARKING, BIKE LANE GREEN |
| 7 | SKID/SLIP RESISTANT PREFORMED THERMOPLASTIC PAVEMENT MARKING, 6–INCH WHITE RETROREFLECTIVE LINE |
| 8 | PAVEMENT MARKING EPOXY, STOP LINE, 24–INCH |
| 9 | PAVEMENT MARKING EPOXY, SYMBOL, BIKE STRAIGHT ARROW |
| 10 | PAVEMENT MARKING EPOXY, SYMBOL, RIGHT ARROW |
| 11 | PAVEMENT MARKING EPOXY, CROSSWALK, 6–INCH |

Notes: All dimensions are to center of marking and face of curb. Sharrow marking set should mark about 150 ft apart. Sharrow markings shall be 11 ft from face of curb with parking and 4 ft without parking.
For layout questions, contact
Ali Heinritz, aheinritz@cityofmadison.com
608.267.1102

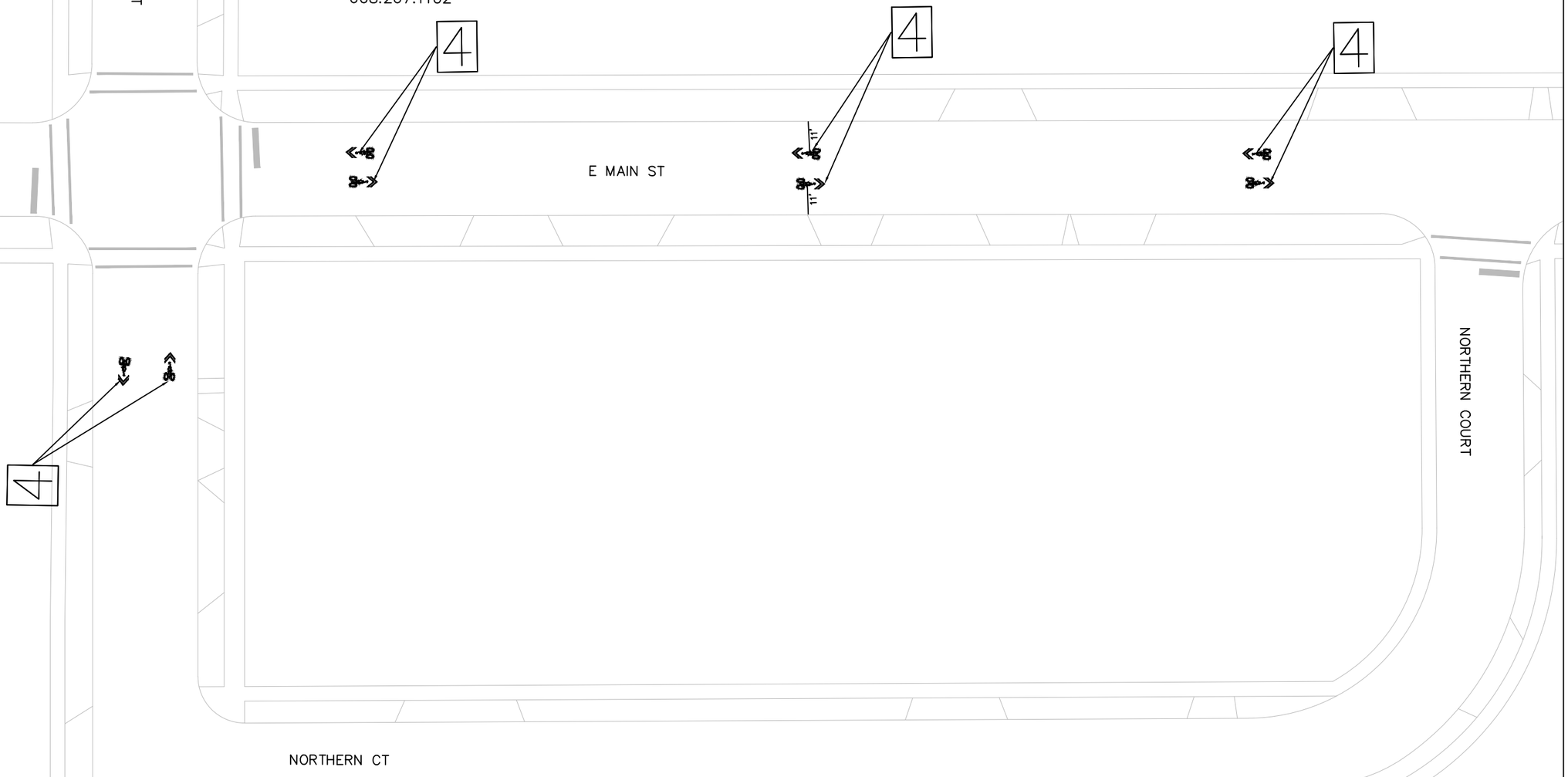


MATCH LINE – 1
AT STATION – 0+00.00
NEXT SHEET NUMBER: ####

| MARK | REVISION | DATE | BY |
|---|---|---|---|
| --- | --- | --- | --- |
| --- | --- | --- | --- |
| --- | --- | --- | --- |
| --- | --- | --- | --- |

Designed By: AJC
Date: 1/16/2025 10:46 AM
Scale: 1" = 40'

15327

15327TE-PAVEMENTMARKING PLANS - MAIN ST 8

EAST MADISON BIKEWAYS: SAFE STREETS

M:\DESIGN\Projects\15327\CAD\Traffic\15327TE-PavementMarking Plans.dwg

MADISON, WI

CONTRACT NO: 8769

15327

M-13

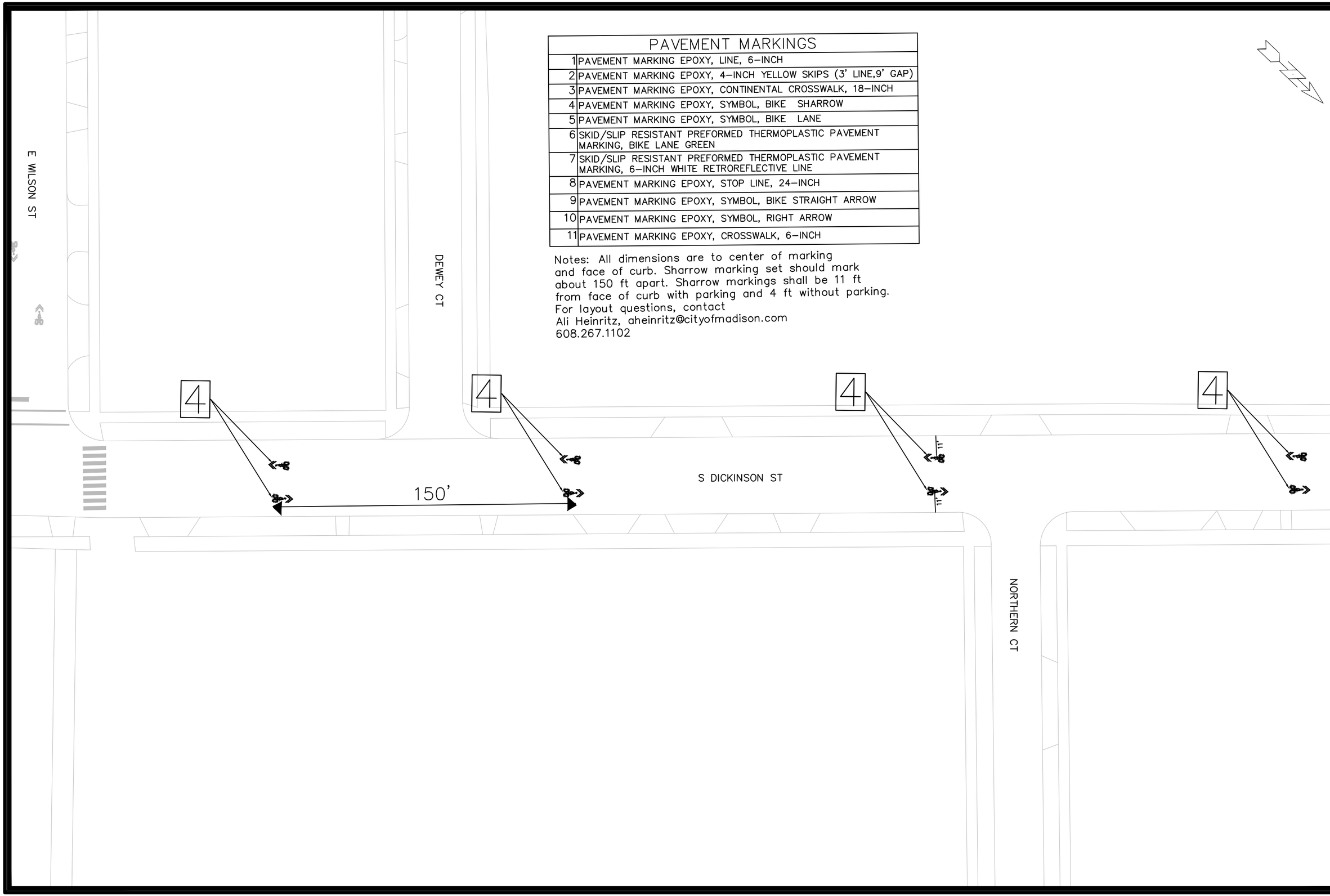


| PAVEMENT MARKINGS | |
|---|---|
| 1 | PAVEMENT MARKING EPOXY, LINE, 6–INCH |
| 2 | PAVEMENT MARKING EPOXY, 4–INCH YELLOW SKIPS (3' LINE,9' GAP) |
| 3 | PAVEMENT MARKING EPOXY, CONTINENTAL CROSSWALK, 18–INCH |
| 4 | PAVEMENT MARKING EPOXY, SYMBOL, BIKE SHARROW |
| 5 | PAVEMENT MARKING EPOXY, SYMBOL, BIKE LANE |
| 6 | SKID/SLIP RESISTANT PREFORMED THERMOPLASTIC PAVEMENT MARKING, BIKE LANE GREEN |
| 7 | SKID/SLIP RESISTANT PREFORMED THERMOPLASTIC PAVEMENT MARKING, 6–INCH WHITE RETROREFLECTIVE LINE |
| 8 | PAVEMENT MARKING EPOXY, STOP LINE, 24–INCH |
| 9 | PAVEMENT MARKING EPOXY, SYMBOL, BIKE STRAIGHT ARROW |
| 10 | PAVEMENT MARKING EPOXY, SYMBOL, RIGHT ARROW |
| 11 | PAVEMENT MARKING EPOXY, CROSSWALK, 6–INCH |

Notes: All dimensions are to center of marking and face of curb. Sharrow marking set should mark about 150 ft apart. Sharrow markings shall be 11 ft from face of curb with parking and 4 ft without parking.
For layout questions, contact
Ali Heinritz, aheinritz@cityofmadison.com
608.267.1102

| MARK | REVISION | DATE | BY |
|---|---|---|---|
| --- | --- | --- | --- |
| --- | --- | --- | --- |
| --- | --- | --- | --- |
| --- | --- | --- | --- |

Designed By: AJC
Date: 1/16/2025 10:49 AM
Scale: 1" = 40'
15327
M-14

15327

15327TE-PAVEMENTMARKING PLANS - DICKINSON

MADISON, WI

EAST MADISON BIKEWAYS: SAFE STREETS

CONTRACT NO: 8769

M:\DESIGN\Projects\15327\CAD\Traffic\15327TE-PavementMarking Plans.dwg

15327

M-14

MATCH LINE – 3
AT STATION – 0+00.00
PREVIOUS SHEET NUMBER: #####

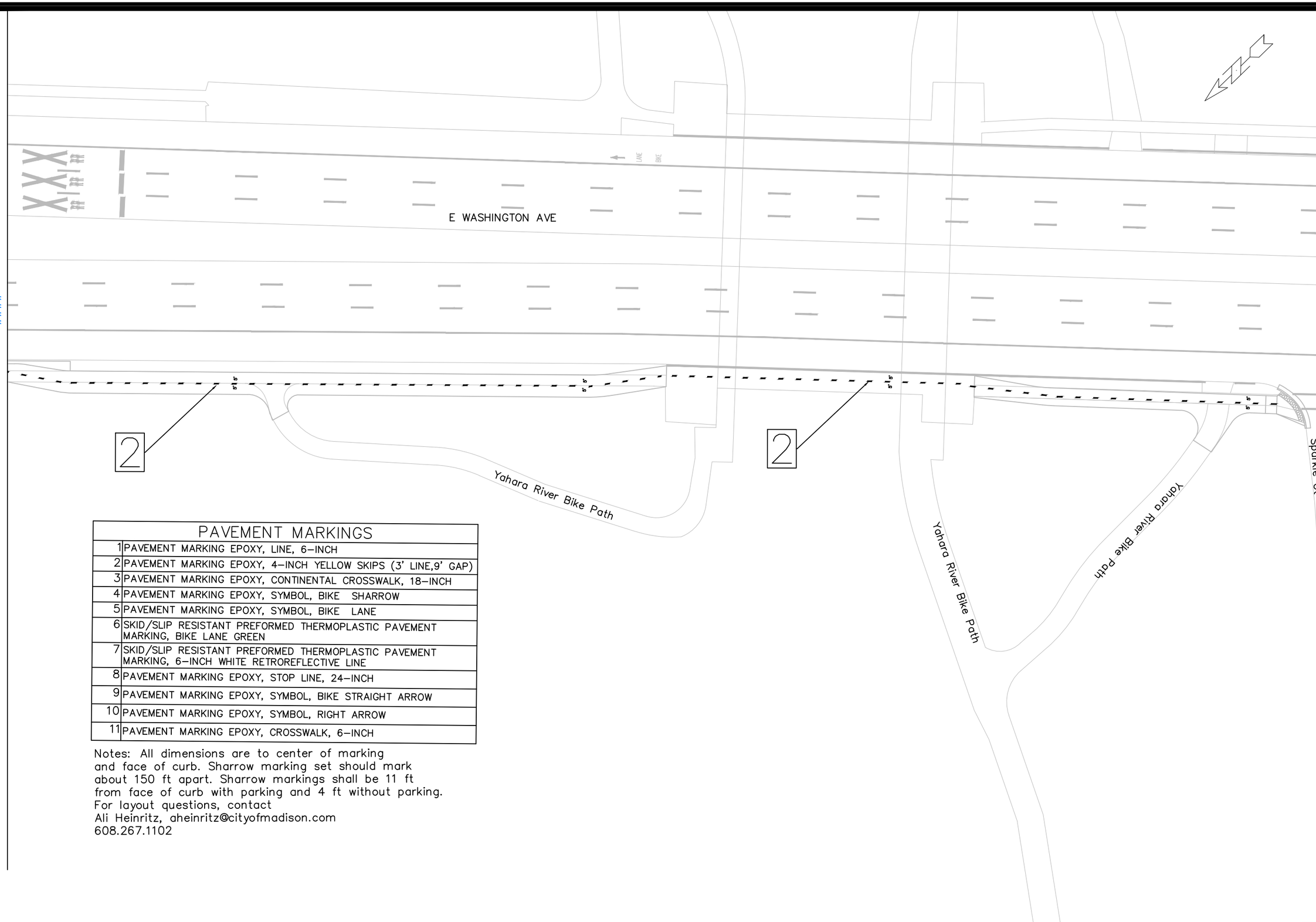


| PAVEMENT MARKINGS | |
|---|---|
| 1 | PAVEMENT MARKING EPOXY, LINE, 6–INCH |
| 2 | PAVEMENT MARKING EPOXY, 4–INCH YELLOW SKIPS (3' LINE,9' GAP) |
| 3 | PAVEMENT MARKING EPOXY, CONTINENTAL CROSSWALK, 18–INCH |
| 4 | PAVEMENT MARKING EPOXY, SYMBOL, BIKE SHARROW |
| 5 | PAVEMENT MARKING EPOXY, SYMBOL, BIKE LANE |
| 6 | SKID/SLIP RESISTANT PREFORMED THERMOPLASTIC PAVEMENT MARKING, BIKE LANE GREEN |
| 7 | SKID/SLIP RESISTANT PREFORMED THERMOPLASTIC PAVEMENT MARKING, 6–INCH WHITE RETROREFLECTIVE LINE |
| 8 | PAVEMENT MARKING EPOXY, STOP LINE, 24–INCH |
| 9 | PAVEMENT MARKING EPOXY, SYMBOL, BIKE STRAIGHT ARROW |
| 10 | PAVEMENT MARKING EPOXY, SYMBOL, RIGHT ARROW |
| 11 | PAVEMENT MARKING EPOXY, CROSSWALK, 6–INCH |

Notes: All dimensions are to center of marking and face of curb. Sharrow marking set should mark about 150 ft apart. Sharrow markings shall be 11 ft from face of curb with parking and 4 ft without parking.
For layout questions, contact
Ali Heinritz, aheinritz@cityofmadison.com
608.267.1102

| MARK | REVISION | DATE | BY |
|---|---|---|---|
| --- | --- | --- | --- |
| --- | --- | --- | --- |
| --- | --- | --- | --- |
| --- | --- | --- | --- |

Designed By: AJC
Date: 1/16/2025 10:53 AM
Scale: 1" = 40'

15327

15327TE-PAVEMENTMARKING PLANS - FIRST ST-E WASH 1

EAST MADISON BIKEWAYS: SAFE STREETS

MADISON, WI

CONTRACT NO: 8769

M:\DESIGN\Projects\15327\CAD\Traffic\15327TE-PavementMarking Plans.dwg

15327

M-15

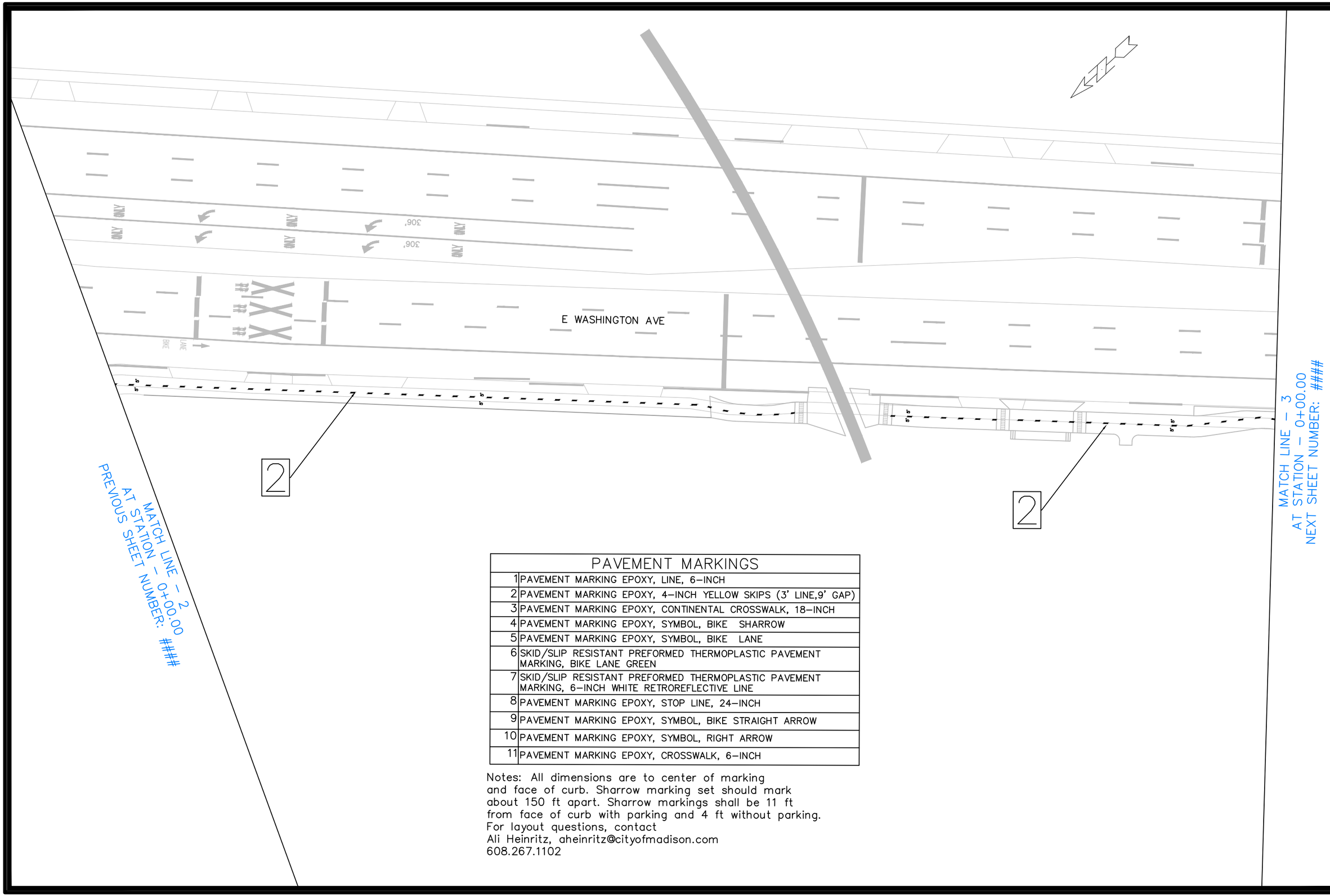


| PAVEMENT MARKINGS | |
|---|---|
| 1 | PAVEMENT MARKING EPOXY, LINE, 6–INCH |
| 2 | PAVEMENT MARKING EPOXY, 4–INCH YELLOW SKIPS (3' LINE,9' GAP) |
| 3 | PAVEMENT MARKING EPOXY, CONTINENTAL CROSSWALK, 18–INCH |
| 4 | PAVEMENT MARKING EPOXY, SYMBOL, BIKE SHARROW |
| 5 | PAVEMENT MARKING EPOXY, SYMBOL, BIKE LANE |
| 6 | SKID/SLIP RESISTANT PREFORMED THERMOPLASTIC PAVEMENT MARKING, BIKE LANE GREEN |
| 7 | SKID/SLIP RESISTANT PREFORMED THERMOPLASTIC PAVEMENT MARKING, 6–INCH WHITE RETROREFLECTIVE LINE |
| 8 | PAVEMENT MARKING EPOXY, STOP LINE, 24–INCH |
| 9 | PAVEMENT MARKING EPOXY, SYMBOL, BIKE STRAIGHT ARROW |
| 10 | PAVEMENT MARKING EPOXY, SYMBOL, RIGHT ARROW |
| 11 | PAVEMENT MARKING EPOXY, CROSSWALK, 6–INCH |

Notes: All dimensions are to center of marking and face of curb. Sharrow marking set should mark about 150 ft apart. Sharrow markings shall be 11 ft from face of curb with parking and 4 ft without parking.
For layout questions, contact
Ali Heinritz, aheinritz@cityofmadison.com
608.267.1102

| MARK | REVISION | DATE | BY |
|---|---|---|---|
| --- | --- | --- | --- |
| --- | --- | --- | --- |
| --- | --- | --- | --- |
| --- | --- | --- | --- |

Designed By: AJC | Date: 1/16/2025 10:56 AM | Scale: 1" = 40'

15327 | M-16

15327TE-PAVEMENTMARKING PLANS - FIRST ST-E WASH 2

15327

EAST MADISON BIKEWAYS: SAFE STREETS

MADISON, WI

CONTRACT NO: 8769

M:\DESIGN\Projects\15327\CAD\Traffic\15327TE-PavementMarking Plans.dwg

15327

M-16

| PAVEMENT MARKINGS | |
|---|---|
| 1 | PAVEMENT MARKING EPOXY, LINE, 6–INCH |
| 2 | PAVEMENT MARKING EPOXY, 4–INCH YELLOW SKIPS (3' LINE,9' GAP) |
| 3 | PAVEMENT MARKING EPOXY, CONTINENTAL CROSSWALK, 18–INCH |
| 4 | PAVEMENT MARKING EPOXY, SYMBOL, BIKE SHARROW |
| 5 | PAVEMENT MARKING EPOXY, SYMBOL, BIKE LANE |
| 6 | SKID/SLIP RESISTANT PREFORMED THERMOPLASTIC PAVEMENT MARKING, BIKE LANE GREEN |
| 7 | SKID/SLIP RESISTANT PREFORMED THERMOPLASTIC PAVEMENT MARKING, 6–INCH WHITE RETROREFLECTIVE LINE |
| 8 | PAVEMENT MARKING EPOXY, STOP LINE, 24–INCH |
| 9 | PAVEMENT MARKING EPOXY, SYMBOL, BIKE STRAIGHT ARROW |
| 10 | PAVEMENT MARKING EPOXY, SYMBOL, RIGHT ARROW |
| 11 | PAVMENT MARKING EPOXY, CROSSWALK, 6–INCH |

Notes: All dimensions are to center of marking and face of curb. Sharrow marking set should mark about 150 ft apart. Sharrow markings shall be 11 ft from face of curb with parking and 4 ft without parking.
For layout questions, contact
Ali Heinritz, aheinritz@cityofmadison.com
608.267.1102

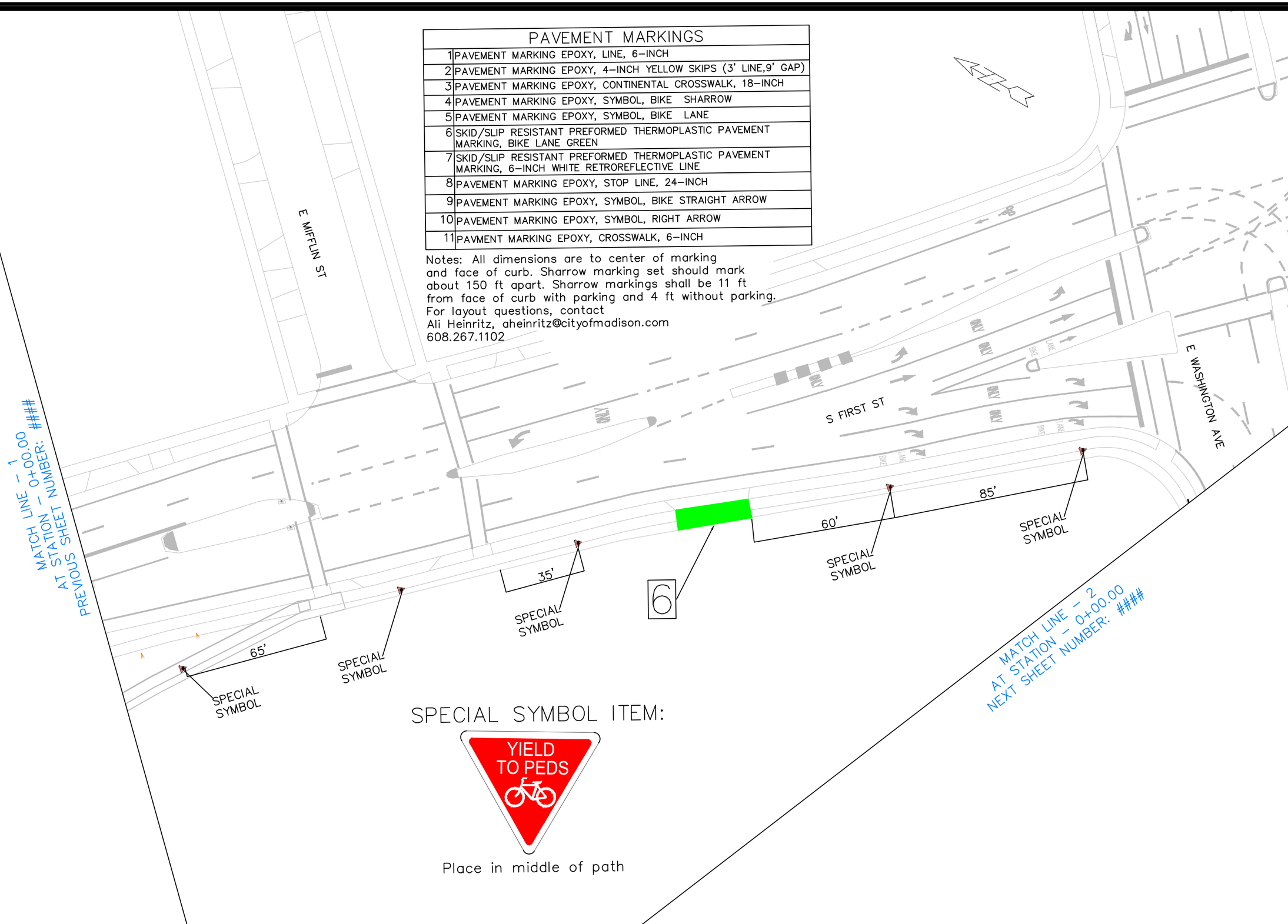


SPECIAL SYMBOL ITEM:




Place in middle of path

| MARK | REVISION | DATE | BY |
|---|---|---|---|
| --- | --- | --- | --- |
| --- | --- | --- | --- |
| --- | --- | --- | --- |
| --- | --- | --- | --- |

Designed By: AJC | Date: 1/16/2025 11:00 AM | Scale: 1" = 40'

15327 | M-17

15327

MADISON, WI

CONTRACT NO: 8769

15327TE-PAVEMENTMARKING PLANS - FIRST ST-E WASH 3

EAST MADISON BIKEWAYS: SAFE STREETS

M:\DESIGN\Projects\15327\CAD\Traffic\15327TE-PavementMarking Plans.dwg

15327

M-17

| PAVEMENT MARKINGS | |
|---|---|
| 1 | PAVEMENT MARKING EPOXY, LINE, 6–INCH |
| 2 | PAVEMENT MARKING EPOXY, 4–INCH YELLOW SKIPS (3' LINE,9' GAP) |
| 3 | PAVEMENT MARKING EPOXY, CONTINENTAL CROSSWALK, 18–INCH |
| 4 | PAVEMENT MARKING EPOXY, SYMBOL, BIKE SHARROW |
| 5 | PAVEMENT MARKING EPOXY, SYMBOL, BIKE LANE |
| 6 | SKID/SLIP RESISTANT PREFORMED THERMOPLASTIC PAVEMENT MARKING, BIKE LANE GREEN |
| 7 | SKID/SLIP RESISTANT PREFORMED THERMOPLASTIC PAVEMENT MARKING, 6–INCH WHITE RETROREFLECTIVE LINE |
| 8 | PAVEMENT MARKING EPOXY, STOP LINE, 24–INCH |
| 9 | PAVEMENT MARKING EPOXY, SYMBOL, BIKE STRAIGHT ARROW |
| 10 | PAVEMENT MARKING EPOXY, SYMBOL, RIGHT ARROW |
| 11 | PAVEMENT MARKING EPOXY, CROSSWALK, 6–INCH |

Notes: All dimensions are to center of marking and face of curb. Sharrow marking set should mark about 150 ft apart. Sharrow markings shall be 11 ft from face of curb with parking and 4 ft without parking.
For layout questions, contact
Ali Heinritz, aheinritz@cityofmadison.com
608.267.1102

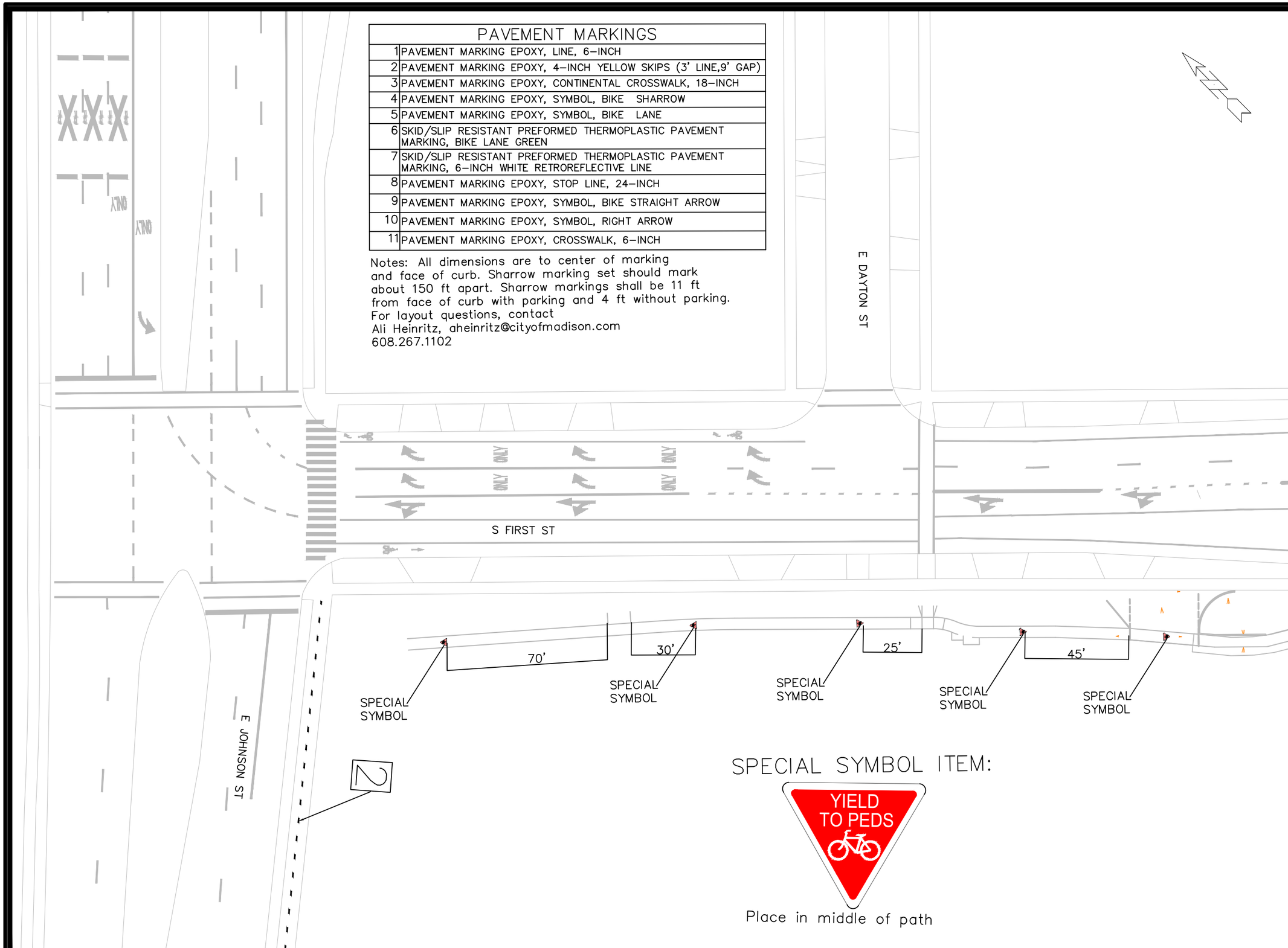


SPECIAL SYMBOL ITEM:




Place in middle of path

| MARK | REVISION | DATE | BY |
|---|---|---|---|
| --- | --- | --- | --- |
| --- | --- | --- | --- |
| --- | --- | --- | --- |
| --- | --- | --- | --- |

Designed By: AJC | Date: 1/16/2025 11:03 AM | Scale: 1" = 40'

15327 | M-18

15327TE-PAVEMENTMARKING PLANS - FIRST-JOHNOSN

15327

EAST MADISON BIKEWAYS: SAFE STREETS

MADISON, WI

M:\DESIGN\Projects\15327\CAD\Traffic\15327TE-PavementMarking Plans.dwg

CONTRACT NO: 8769

15327

M-18

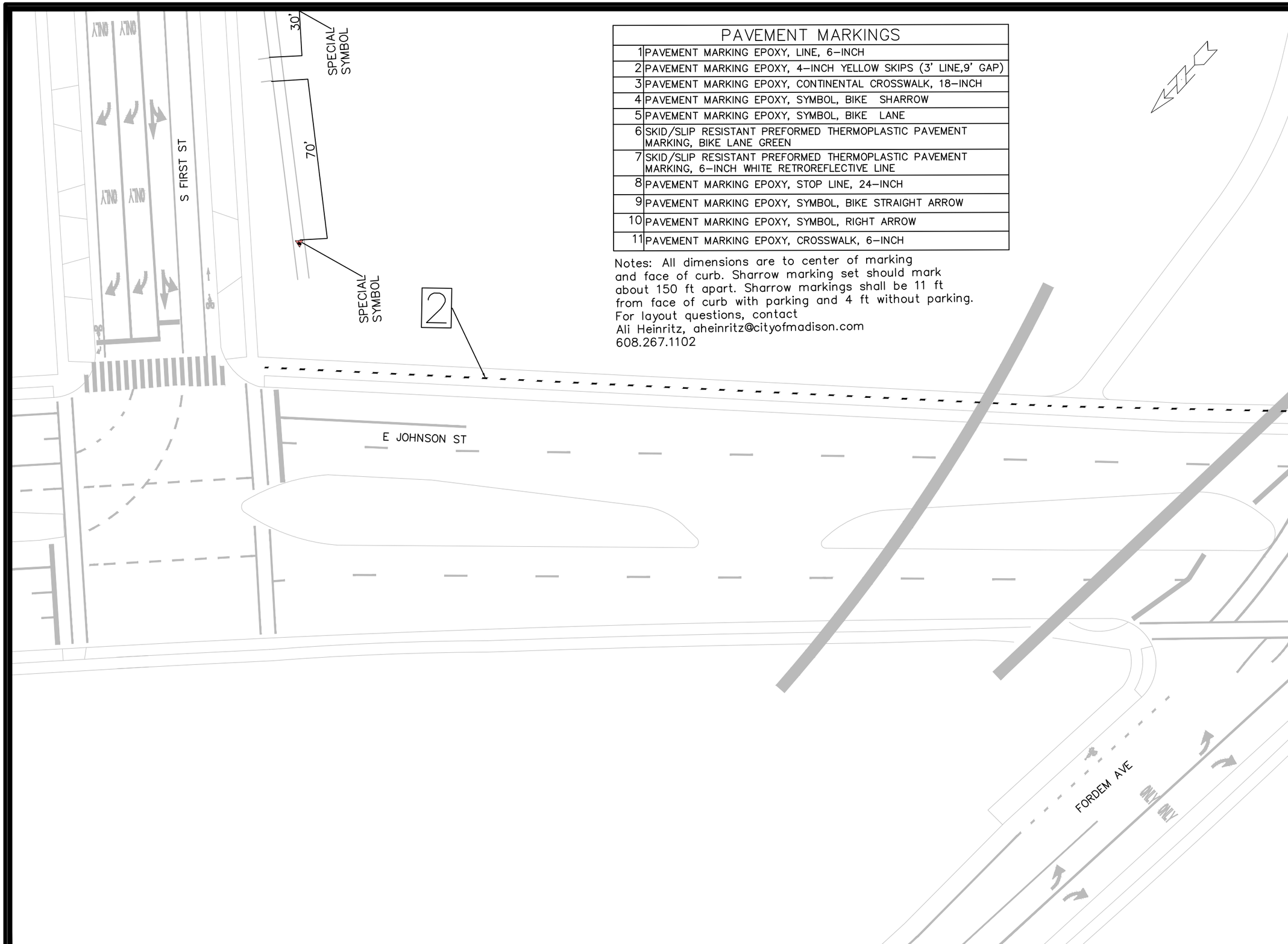


| PAVEMENT MARKINGS | |
|---|---|
| 1 | PAVEMENT MARKING EPOXY, LINE, 6–INCH |
| 2 | PAVEMENT MARKING EPOXY, 4–INCH YELLOW SKIPS (3' LINE,9' GAP) |
| 3 | PAVEMENT MARKING EPOXY, CONTINENTAL CROSSWALK, 18–INCH |
| 4 | PAVEMENT MARKING EPOXY, SYMBOL, BIKE SHARROW |
| 5 | PAVEMENT MARKING EPOXY, SYMBOL, BIKE LANE |
| 6 | SKID/SLIP RESISTANT PREFORMED THERMOPLASTIC PAVEMENT MARKING, BIKE LANE GREEN |
| 7 | SKID/SLIP RESISTANT PREFORMED THERMOPLASTIC PAVEMENT MARKING, 6–INCH WHITE RETROREFLECTIVE LINE |
| 8 | PAVEMENT MARKING EPOXY, STOP LINE, 24–INCH |
| 9 | PAVEMENT MARKING EPOXY, SYMBOL, BIKE STRAIGHT ARROW |
| 10 | PAVEMENT MARKING EPOXY, SYMBOL, RIGHT ARROW |
| 11 | PAVEMENT MARKING EPOXY, CROSSWALK, 6–INCH |

Notes: All dimensions are to center of marking and face of curb. Sharrow marking set should mark about 150 ft apart. Sharrow markings shall be 11 ft from face of curb with parking and 4 ft without parking.
For layout questions, contact
Ali Heinritz, aheinritz@cityofmadison.com
608.267.1102

MATCH LINE – 1
AT STATION – 0+00.00
NEXT SHEET NUMBER: ####

| MARK | REVISION | DATE | BY |
|---|---|---|---|
| --- | --- | --- | --- |
| --- | --- | --- | --- |
| --- | --- | --- | --- |
| --- | --- | --- | --- |

Designed By: AJC
Date: 1/16/2025 11:06 AM
Scale: 1" = 40'

15327

15327TE-PAVEMENTMARKING PLANS - JOHNSON ST 1

EAST MADISON BIKEWAYS: SAFE STREETS

MADISON, WI

CONTRACT NO: 8769

M:\DESIGN\Projects\15327\CAD\Traffic\15327TE-PavementMarking Plans.dwg

15327

M-19

| PAVEMENT MARKINGS | |
|---|---|
| 1 | PAVEMENT MARKING EPOXY, LINE, 6–INCH |
| 2 | PAVEMENT MARKING EPOXY, 4–INCH YELLOW SKIPS (3' LINE,9' GAP) |
| 3 | PAVEMENT MARKING EPOXY, CONTINENTAL CROSSWALK, 18–INCH |
| 4 | PAVEMENT MARKING EPOXY, SYMBOL, BIKE SHARROW |
| 5 | PAVEMENT MARKING EPOXY, SYMBOL, BIKE LANE |
| 6 | SKID/SLIP RESISTANT PREFORMED THERMOPLASTIC PAVEMENT MARKING, BIKE LANE GREEN |
| 7 | SKID/SLIP RESISTANT PREFORMED THERMOPLASTIC PAVEMENT MARKING, 6–INCH WHITE RETROREFLECTIVE LINE |
| 8 | PAVEMENT MARKING EPOXY, STOP LINE, 24–INCH |
| 9 | PAVEMENT MARKING EPOXY, SYMBOL, BIKE STRAIGHT ARROW |
| 10 | PAVEMENT MARKING EPOXY, SYMBOL, RIGHT ARROW |
| 11 | PAVEMENT MARKING EPOXY, CROSSWALK, 6–INCH |

Notes: All dimensions are to center of marking and face of curb. Sharrow marking set should mark about 150 ft apart. Sharrow markings shall be 11 ft from face of curb with parking and 4 ft without parking.
For layout questions, contact
Ali Heinritz, aheinritz@cityofmadison.com
608.267.1102

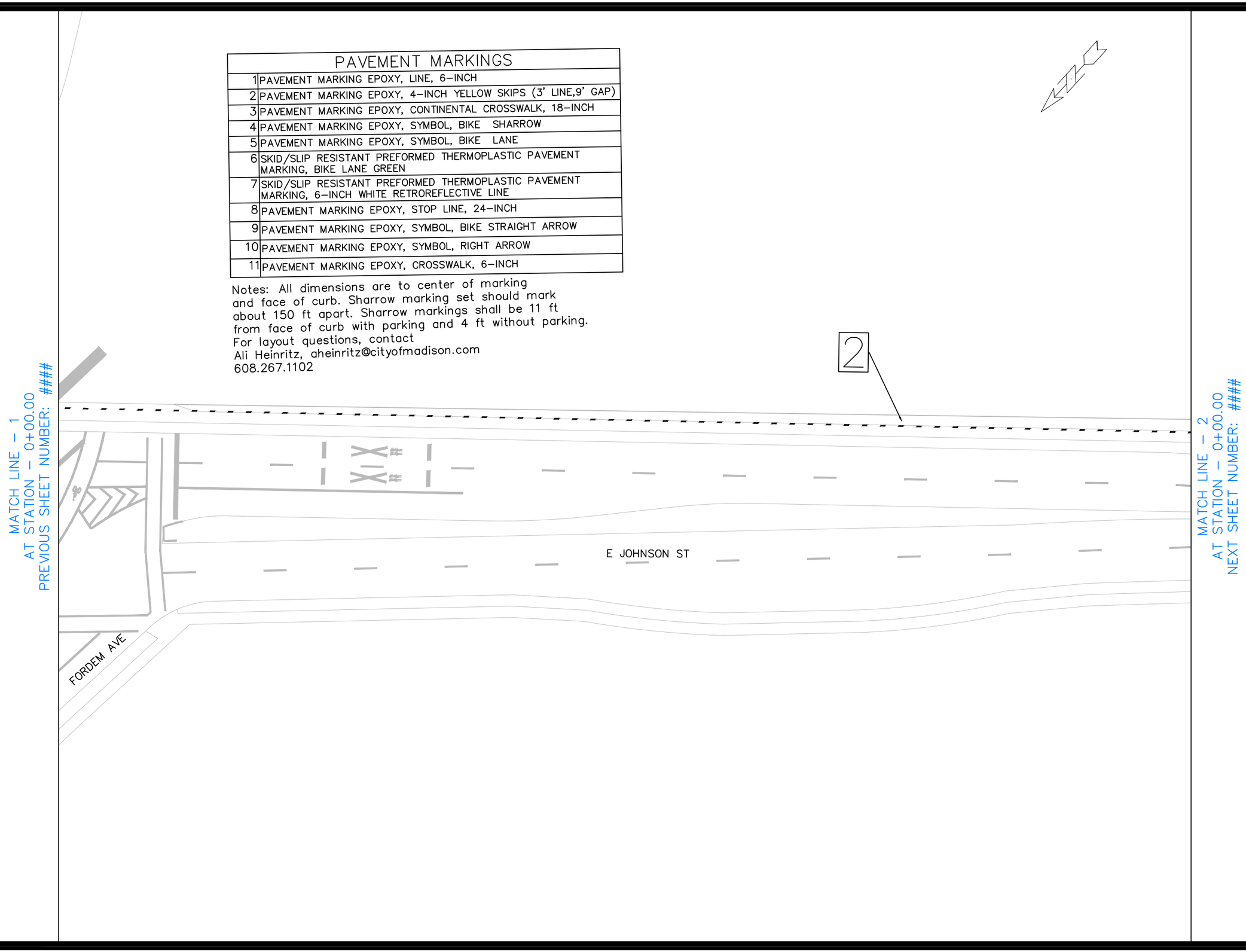


| MARK | REVISION | DATE | BY |
|---|---|---|---|
| --- | --- | --- | --- |
| --- | --- | --- | --- |
| --- | --- | --- | --- |
| --- | --- | --- | --- |

Designed By: AJC | Date: 1/16/2025 11:10 AM | Scale: 1" = 40'

15327 | M-20

15327

MADISON, WI

CONTRACT NO: 8769

15327TE-PAVEMENTMARKING PLANS - JOHNSON ST 2

EAST MADISON BIKEWAYS: SAFE STREETS

M:\DESIGN\Projects\15327\CAD\Traffic\15327TE-PavementMarking Plans.dwg

15327

M-20

| PAVEMENT MARKINGS | |
|---|---|
| 1 | PAVEMENT MARKING EPOXY, LINE, 6–INCH |
| 2 | PAVEMENT MARKING EPOXY, 4–INCH YELLOW SKIPS (3' LINE,9' GAP) |
| 3 | PAVEMENT MARKING EPOXY, CONTINENTAL CROSSWALK, 18–INCH |
| 4 | PAVEMENT MARKING EPOXY, SYMBOL, BIKE SHARROW |
| 5 | PAVEMENT MARKING EPOXY, SYMBOL, BIKE LANE |
| 6 | SKID/SLIP RESISTANT PREFORMED THERMOPLASTIC PAVEMENT MARKING, BIKE LANE GREEN |
| 7 | SKID/SLIP RESISTANT PREFORMED THERMOPLASTIC PAVEMENT MARKING, 6–INCH WHITE RETROREFLECTIVE LINE |
| 8 | PAVEMENT MARKING EPOXY, STOP LINE, 24–INCH |
| 9 | PAVEMENT MARKING EPOXY, SYMBOL, BIKE STRAIGHT ARROW |
| 10 | PAVEMENT MARKING EPOXY, SYMBOL, RIGHT ARROW |
| 11 | PAVEMENT MARKING EPOXY, CROSSWALK, 6–INCH |

Notes: All dimensions are to center of marking and face of curb. Sharrow marking set should mark about 150 ft apart. Sharrow markings shall be 11 ft from face of curb with parking and 4 ft without parking.
For layout questions, contact
Ali Heinritz, aheinritz@cityofmadison.com
608.267.1102

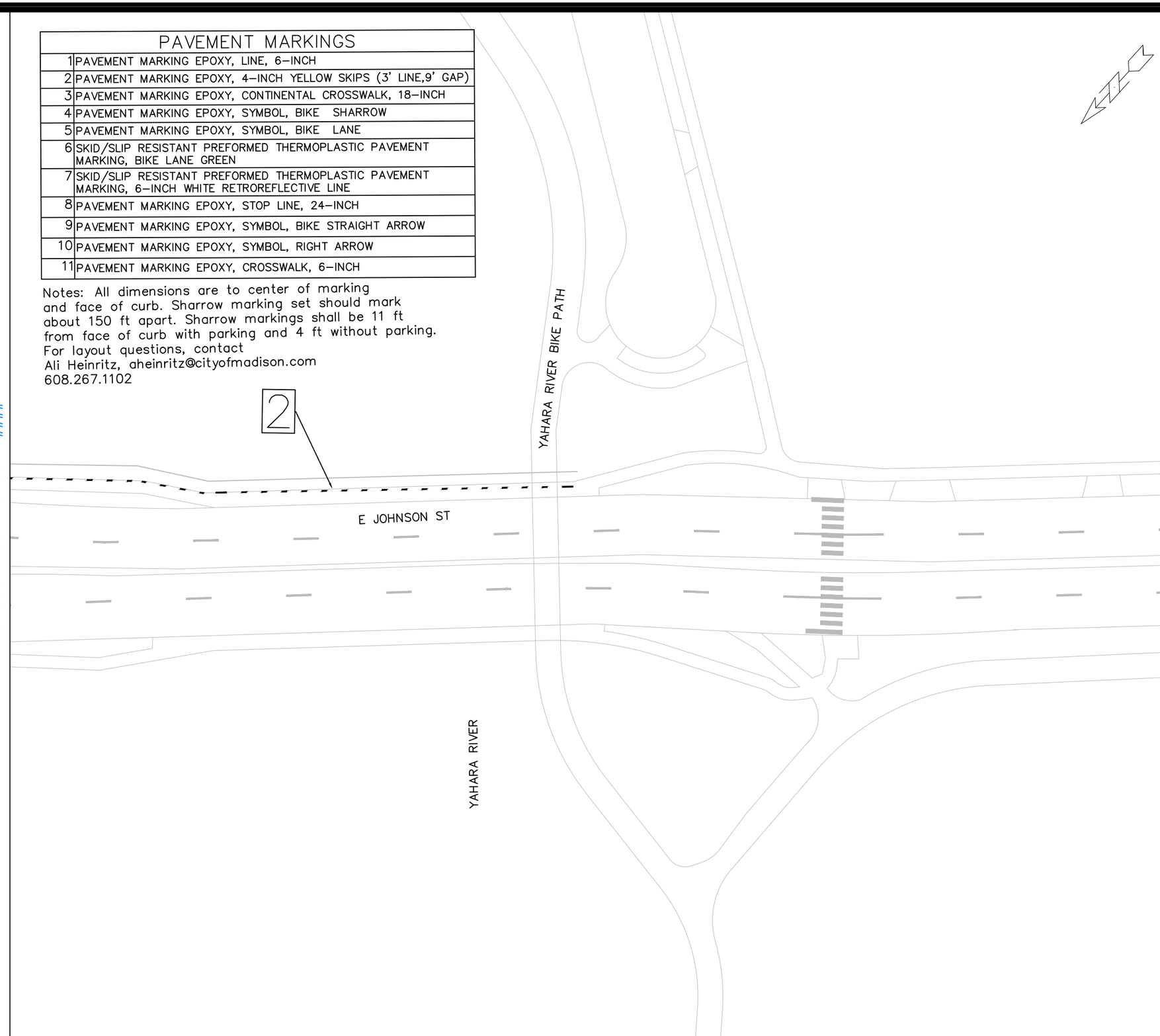


MATCH LINE – 2
AT STATION – 0+00.00
PREVIOUS SHEET NUMBER: ####

| MARK | REVISION | DATE | BY |
|---|---|---|---|
| --- | --- | --- | --- |
| --- | --- | --- | --- |
| --- | --- | --- | --- |
| --- | --- | --- | --- |

Designed By: AJC | Date: 1/16/2025 11:13 AM | Scale: 1" = 40'
15327 | M-21

15327

MADISON, WI

CONTRACT NO: 8769

15327TE-PAVEMENTMARKING PLANS - JOHNSON ST 3

EAST MADISON BIKEWAYS: SAFE STREETS

M:\DESIGN\Projects\15327\CAD\Traffic\15327TE-PavementMarking Plans.dwg

15327

M-21

REVISION #1 04-10-2025
CROSS-SECTION UPDATES PER PATH AND PROFILE CHANGES

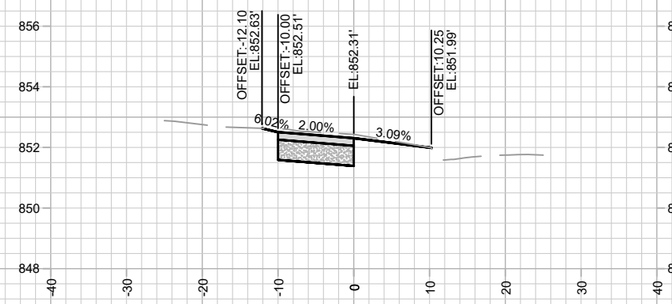


10+75.00

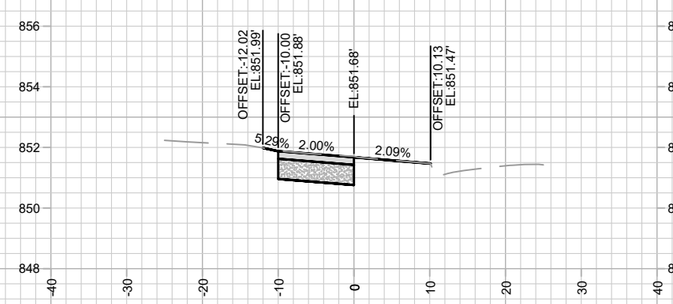


11+50.00

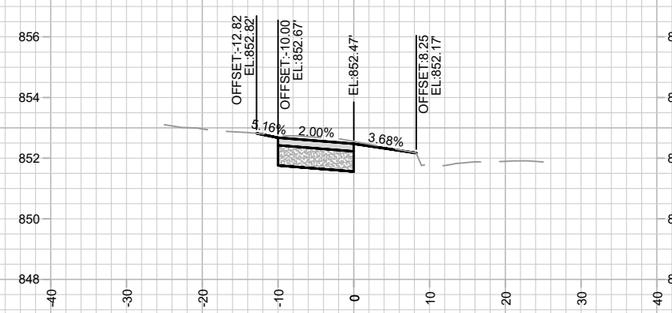


10+50.00

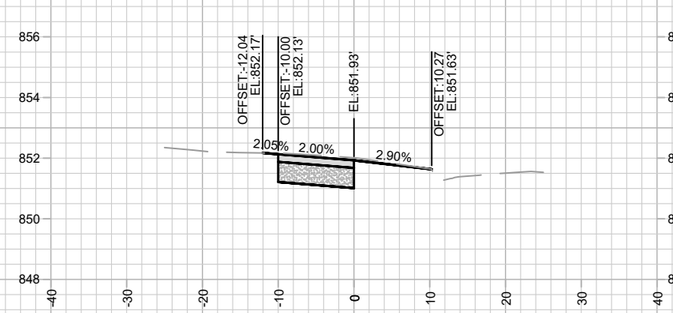


11+25.00

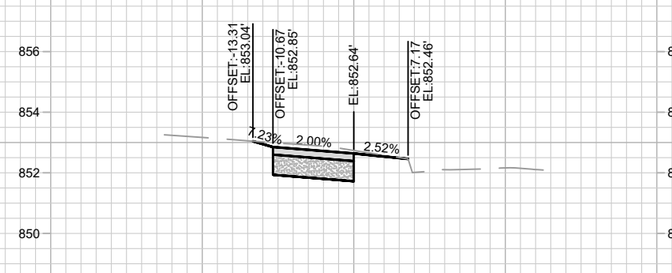


10+25.00

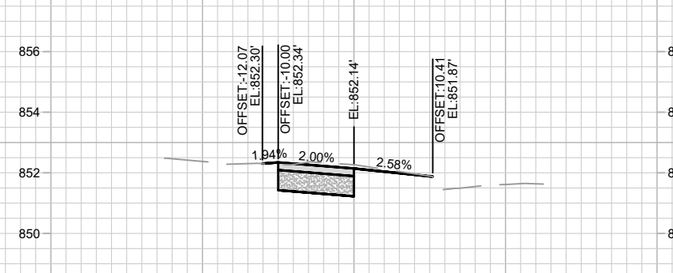


11+00.00

| MARK | REVISION | DATE | BY |
|---|---|---|---|
| --- | --- | --- | --- |
| --- | --- | --- | --- |
| --- | --- | --- | --- |
| --- | --- | --- | --- |

Designed By: AJC Date: 4/10/2025 12:54 PM Scale: 1" = 20'

15104

MADISON, WI

CONTRACT NO: 8769

NORTH SHORE DRIVE PATH - CROSS SECTIONS

NORTH SHORE DR PATH

M:\DESIGN\Projects\15104\CAD\Streets\15104EN-XSections.dwg

15104

X-1

REVISION #1 04-10-2025
CROSS-SECTION UPDATES PER PATH AND PROFILE CHANGES

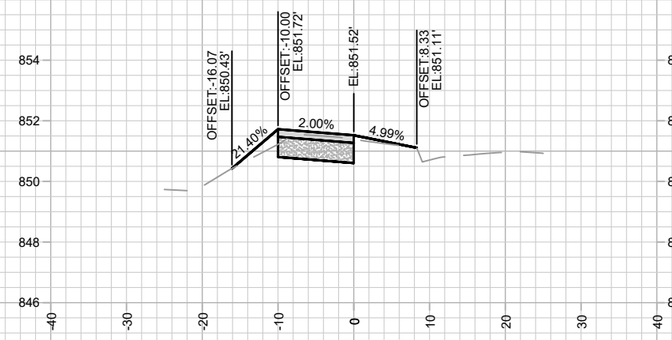


12+25.00

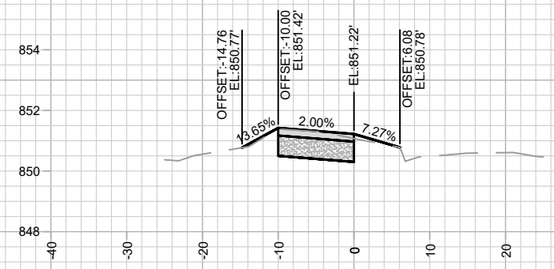


13+00.00

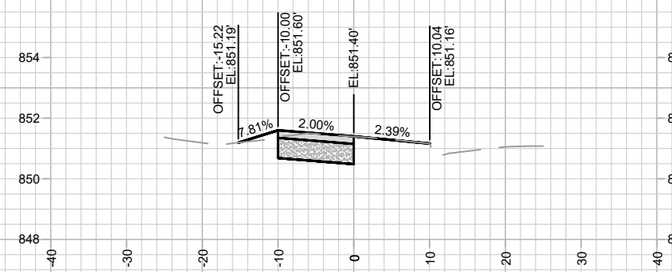


12+00.00

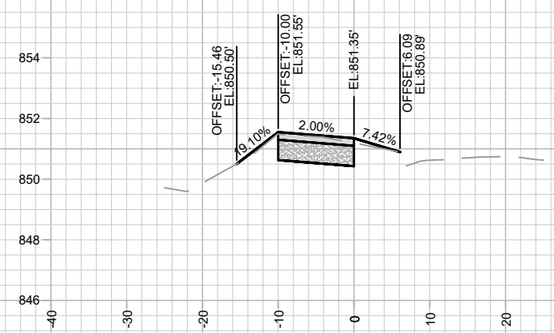


12+75.00

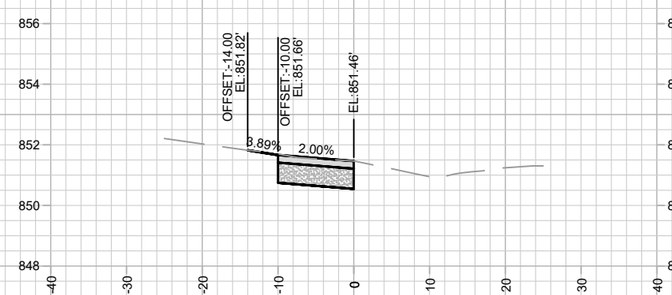


11+75.00

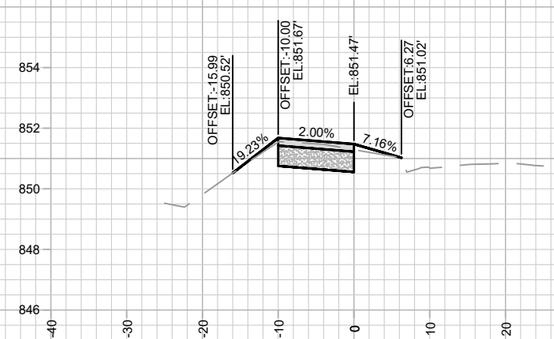


12+50.00

| MARK | REVISION | DATE | BY |
|---|---|---|---|
| --- | --- | --- | --- |
| --- | --- | --- | --- |
| --- | --- | --- | --- |
| --- | --- | --- | --- |

Designed By: AJC | Date: 4/10/2025 12:54 PM | Scale: 1" = 20'

15104

X-2

15104

MADISON, WI

CONTRACT NO: 8769

NORTH SHORE DRIVE PATH - CROSS SECTIONS

NORTH SHORE DR PATH

M:\DESIGN\Projects\15104\CAD\Streets\15104EN-XSections.dwg

15104

X-2

REVISION #1 04-10-2025
CROSS-SECTION UPDATES PER PATH AND PROFILE CHANGES

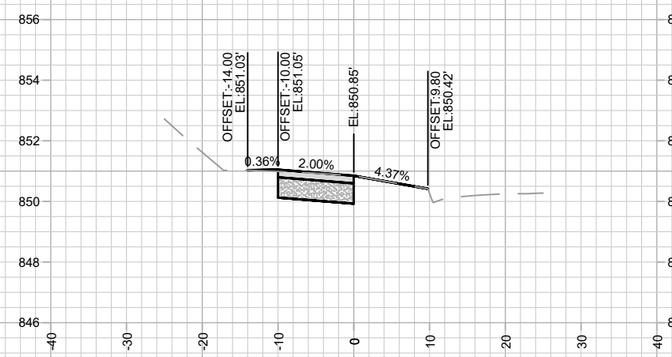


13+75.00

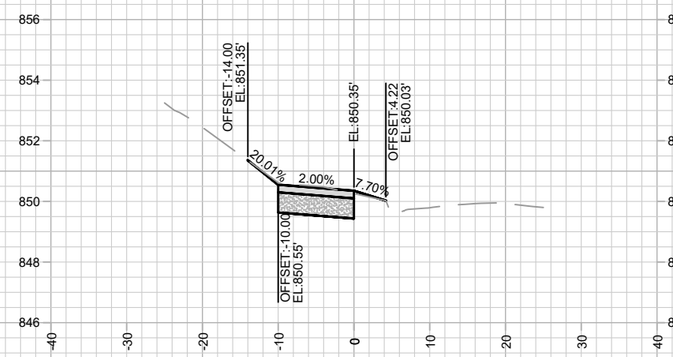


14+50.00

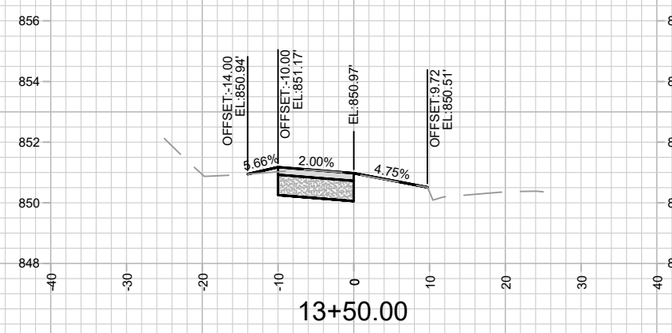


13+50.00

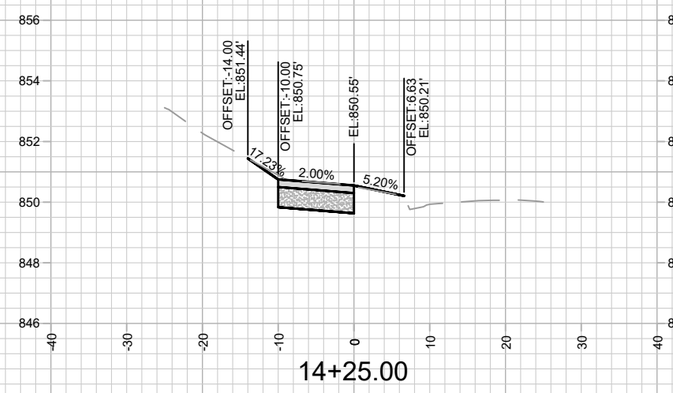


14+25.00

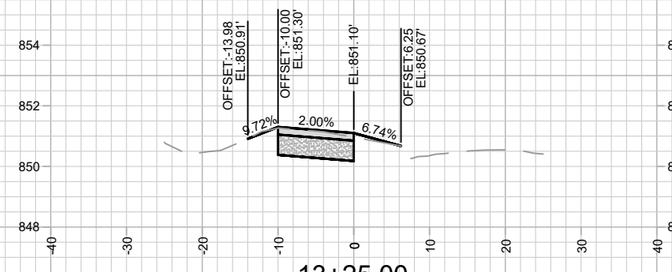


13+25.00

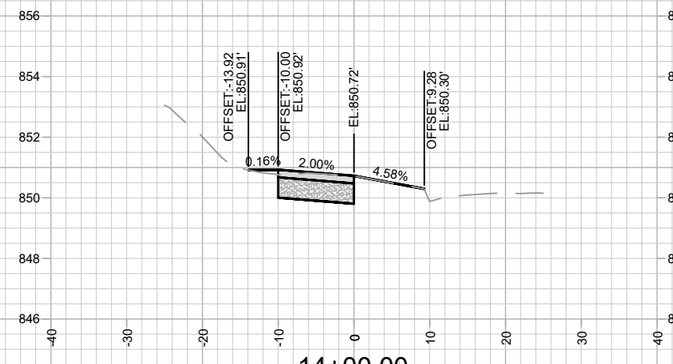


14+00.00

| MARK | REVISION | DATE | BY |
|---|---|---|---|
| --- | --- | --- | --- |
| --- | --- | --- | --- |
| --- | --- | --- | --- |
| --- | --- | --- | --- |

Designed By: AJC Date: 4/10/2025 12:54 PM Scale: 1" = 20'

X-3

15104

MADISON, WI

CONTRACT NO: 8769

NORTH SHORE DRIVE PATH - CROSS SECTIONS

NORTH SHORE DR PATH

M:\DESIGN\Projects\15104\CAD\Streets\15104EN-XSections.dwg

15104

X-3

REVISION #1 04-10-2025
CROSS-SECTION UPDATES PER PATH AND PROFILE CHANGES

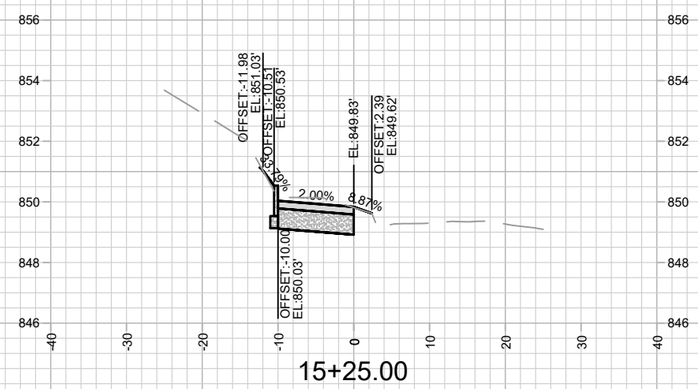


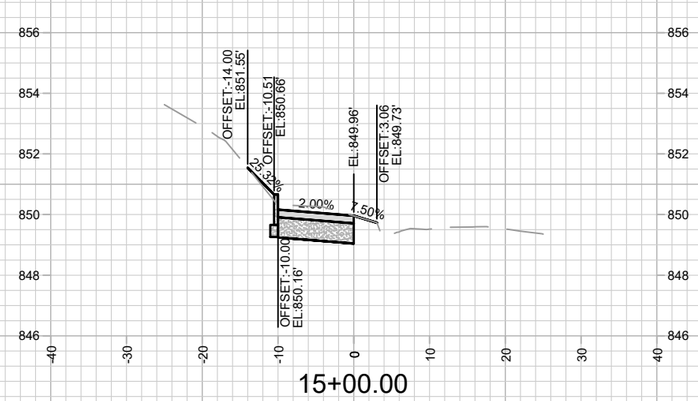


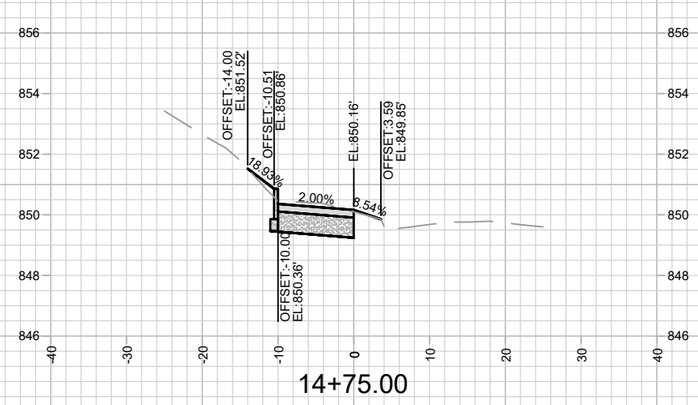


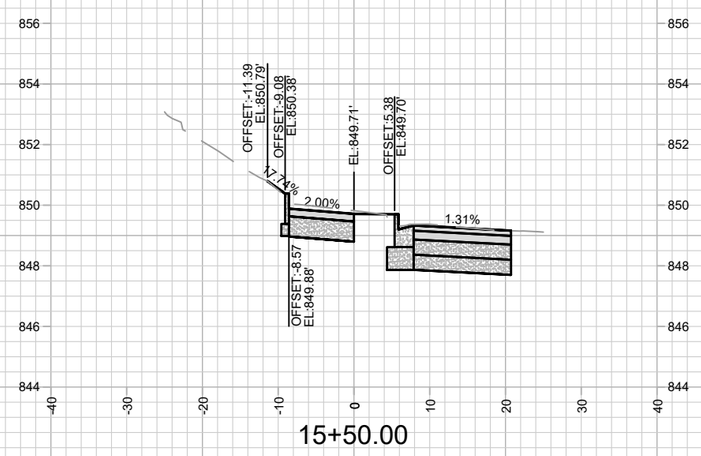


| MARK | REVISION | DATE | BY |
|---|---|---|---|
| --- | --- | --- | --- |
| --- | --- | --- | --- |
| --- | --- | --- | --- |
| --- | --- | --- | --- |

Designed By: AJC
Date: 4/10/2025 12:54 PM
Scale: 1" = 20'

15104

MADISON, WI

CONTRACT NO: 8769

NORTH SHORE DRIVE PATH - CROSS SECTIONS

NORTH SHORE DR PATH

M:\DESIGN\Projects\15104\CAD\Streets\15104EN-XSections.dwg

15104

X-4

21+50.00




22+25.00




21+25.00




22+00.00




21+00.00




21+75.00

| MARK | REVISION | DATE | BY |
|---|---|---|---|
| --- | --- | --- | --- |
| --- | --- | --- | --- |
| --- | --- | --- | --- |
| --- | --- | --- | --- |

Designed By: AJC
Date: 12/16/2024 3:28 PM
Scale: 1" = 20'

X-5

15104

MADISON, WI

CONTRACT NO: 8769

NORTH SHORE DRIVE - CROSS SECTIONS

NORTH SHORE DR PATH

M:\DESIGN\Projects\15104\CAD\Streets\15104EN-XSections.dwg

15104

X-5

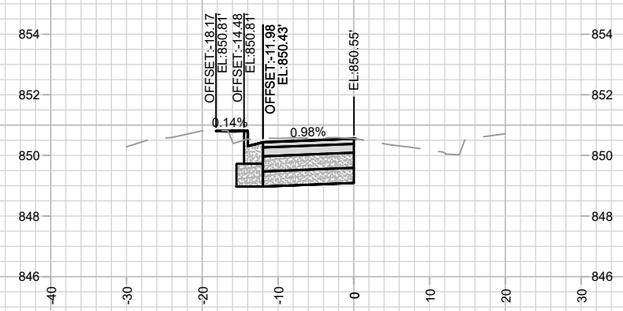


23+00.00

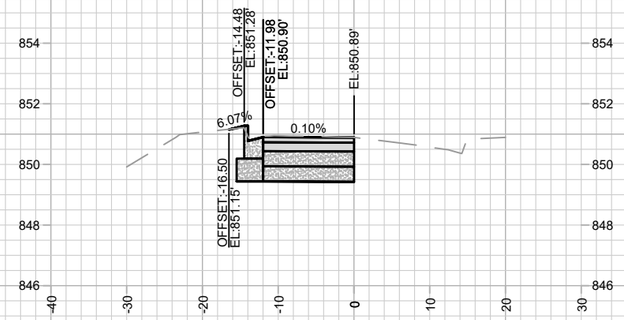


23+75.00

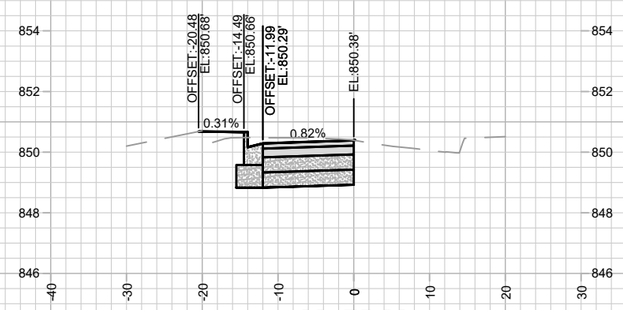


22+75.00

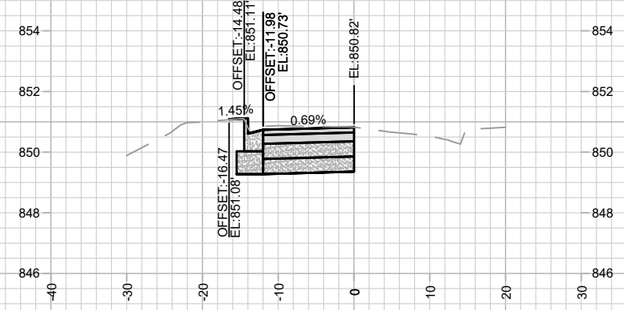


23+50.00

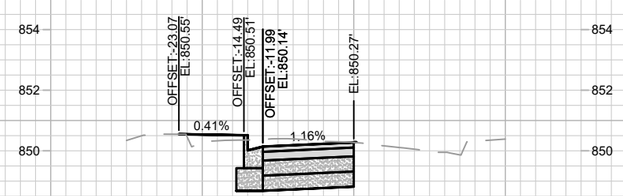


22+50.00

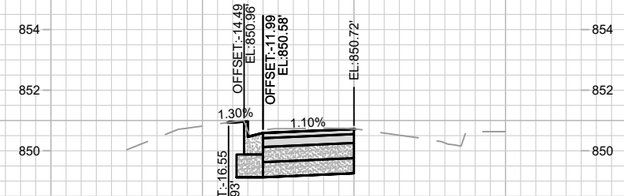


23+25.00

| MARK | REVISION | DATE | BY |
|---|---|---|---|
| --- | --- | --- | --- |
| --- | --- | --- | --- |
| --- | --- | --- | --- |
| --- | --- | --- | --- |

Designed By: AJC | Date: 12/16/2024 3:28 PM | Scale: 1" = 20'

15104

MADISON, WI

CONTRACT NO: 8769

NORTH SHORE DRIVE - CROSS SECTIONS

NORTH SHORE DR PATH

M:\DESIGN\Projects\15104\CAD\Streets\15104EN-XSections.dwg

15104

X-6

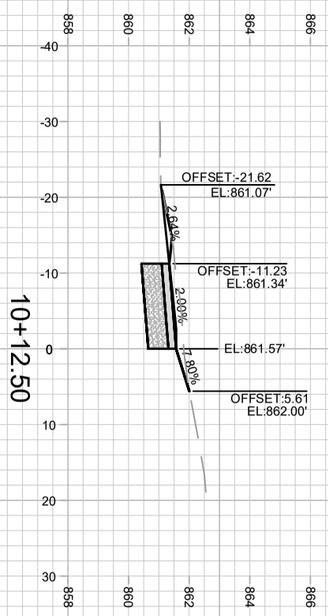


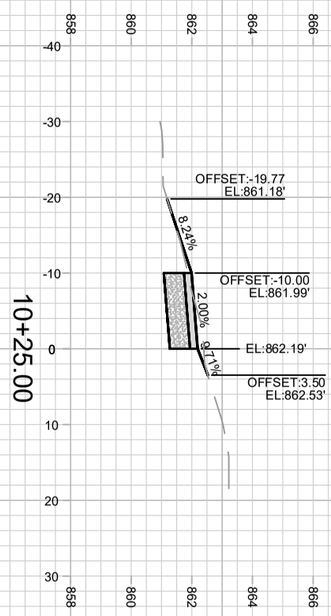


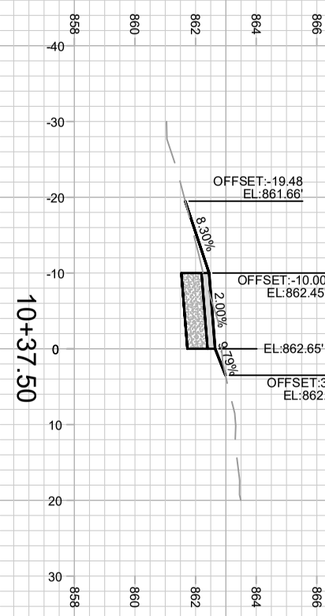


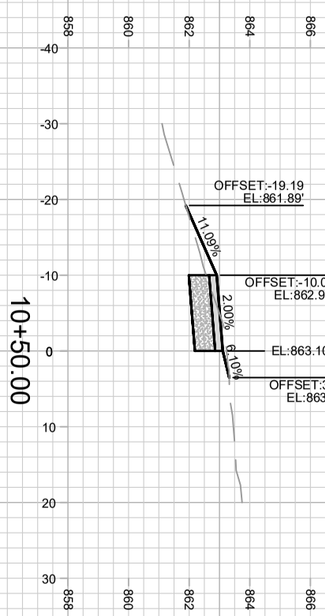


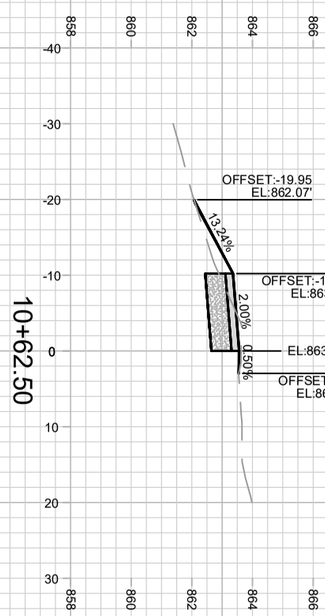


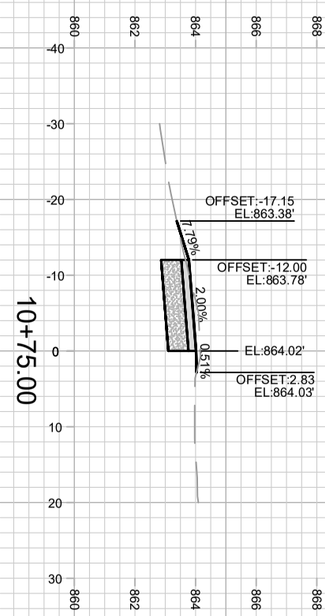


X-7

15327

WINNEBAGO PATH - CROSS SECTIONS 15327

EAST MADISON BIKEWAYS: SAFE STREETS MADISON, WI

\\Gisserver\data\DESIGN\Projects\15327\CAD\Streets\15327EN-Corridor_Winnebago.dwg CONTRACT NO: 8769

| MARK | REVISION | DATE | BY |
|---|---|---|---|
| --- | --- | --- | --- |
| --- | --- | --- | --- |
| --- | --- | --- | --- |
| --- | --- | --- | --- |

Designed By: AJC | Date: 12/4/2024 12:56 PM | Scale: 1" = 20'

15327 X-7

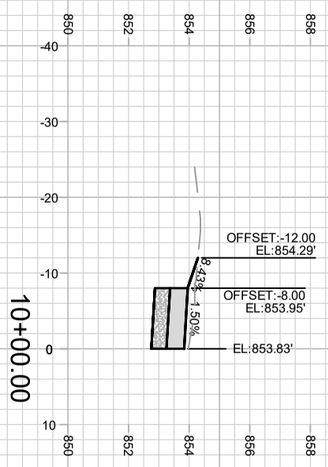


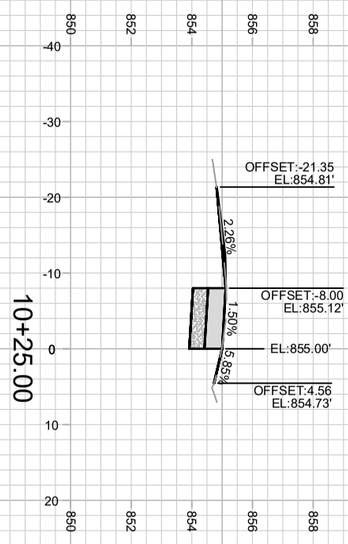


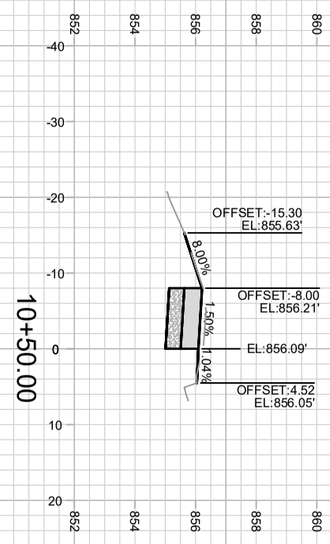


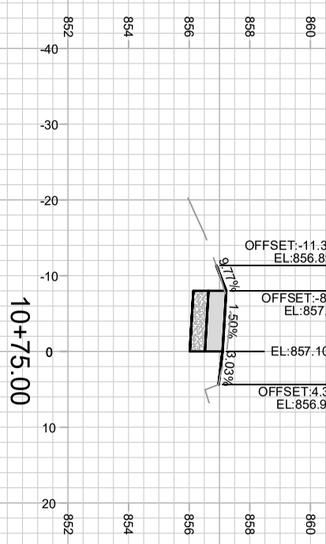


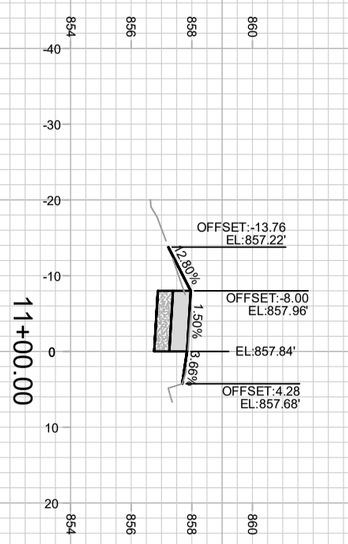


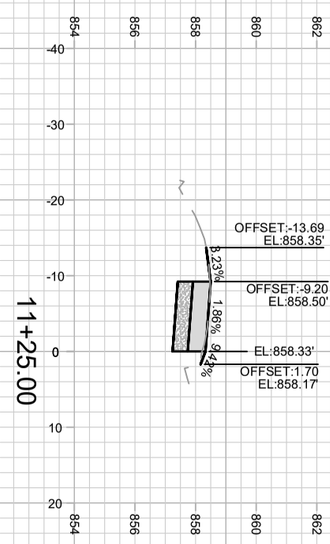


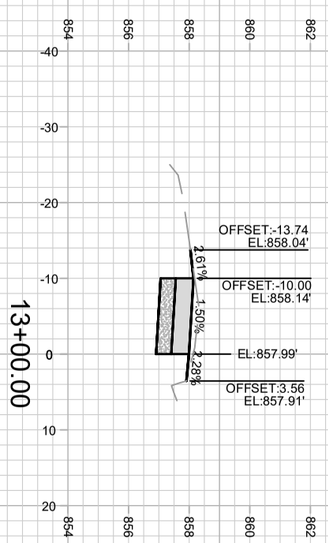


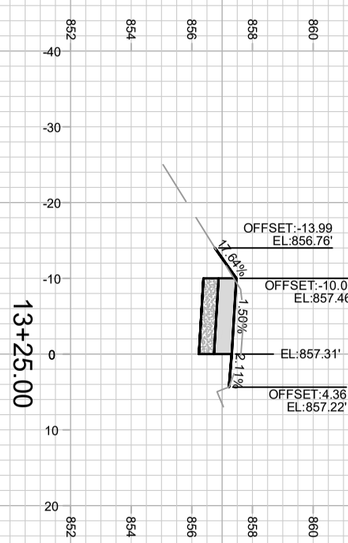


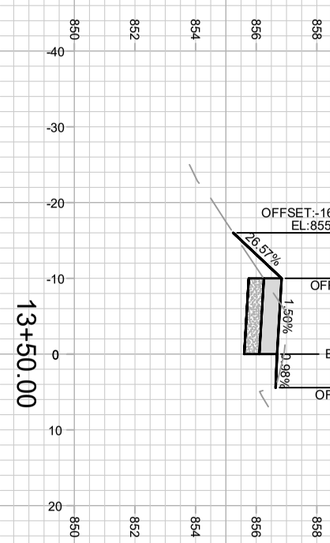


X-8

15327

E WASHINGTON AVE SIDEWALK WIDENING - CROSS SECTIONS 15327

EAST MADISON BIKEWAYS: SAFE STREETS MADISON, WI

\\Gisserver\data\DESIGN\Projects\15327\CAD\Streets\15327EN-XSections_BurrJones-EWash.dwg CONTRACT NO: 8769

| MARK | REVISION | DATE | BY |
|---|---|---|---|
| --- | --- | --- | --- |
| --- | --- | --- | --- |
| --- | --- | --- | --- |
| --- | --- | --- | --- |

Designed By: AJC | Date: 12/4/2024 12:58 PM | Scale: 1" = 20'

15327 X-8

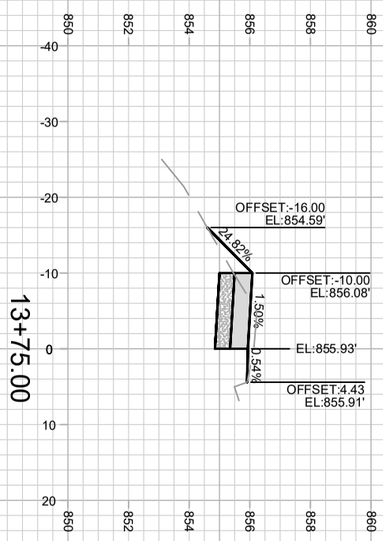


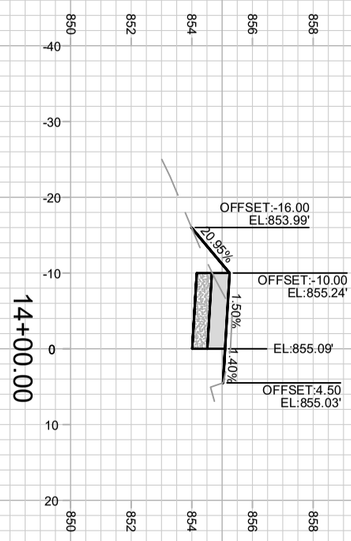


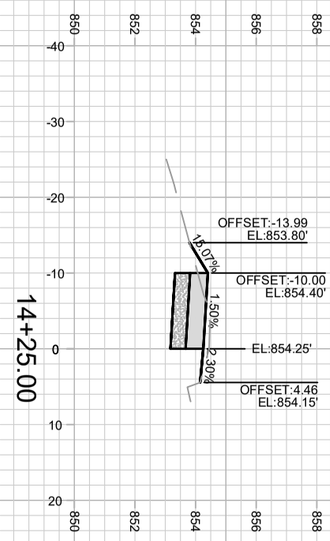


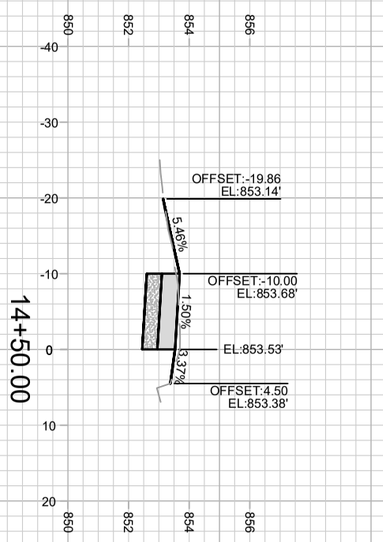


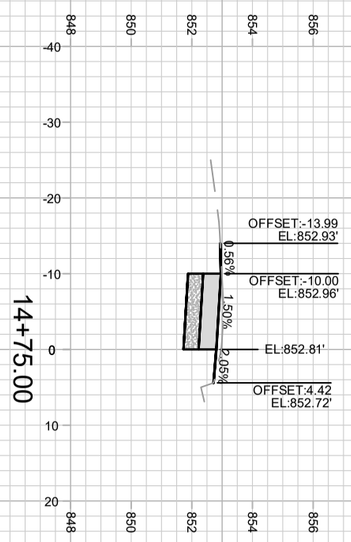


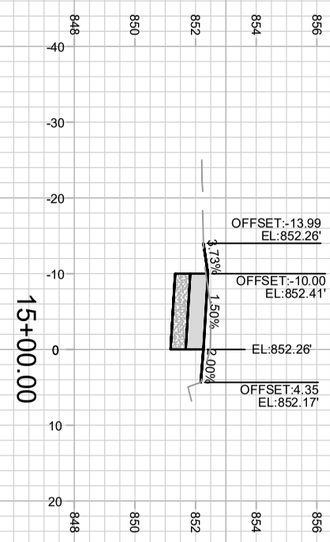


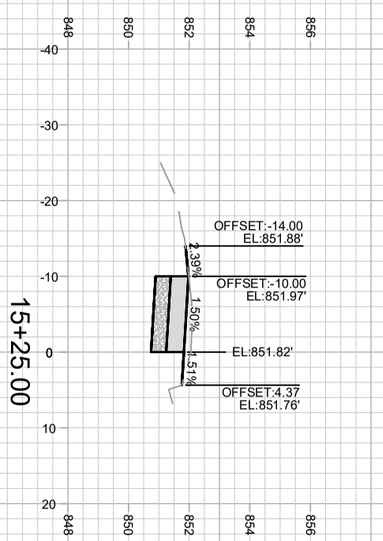


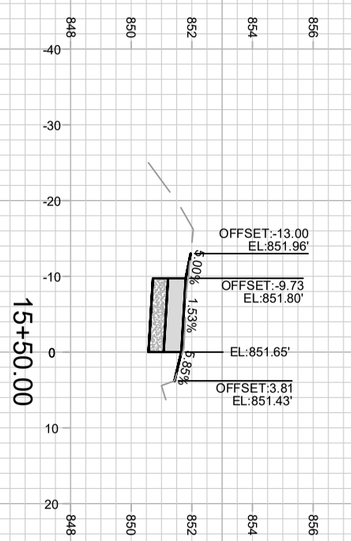


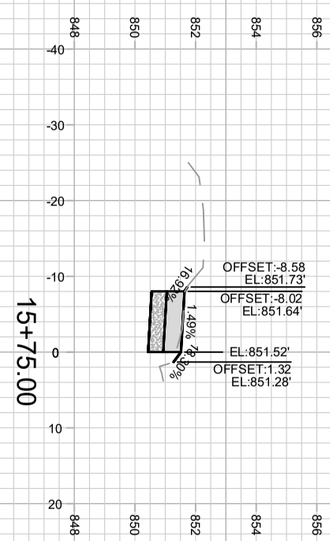


X-9

15327

E WASHINGTON AVE SIDEWALK WIDENING - CROSS SECTIONS 15327

EAST MADISON BIKEWAYS: SAFE STREETS MADISON, WI

\\Gisserver\data\DESIGN\Projects\15327\CAD\Streets\15327EN-XSections_BurrJones-EWash.dwg CONTRACT NO: 8769

| MARK | REVISION | DATE | BY |
|---|---|---|---|
| --- | --- | --- | --- |
| --- | --- | --- | --- |
| --- | --- | --- | --- |
| --- | --- | --- | --- |

Designed By: AJC | Date: 12/4/2024 12:58 PM | Scale: 1" = 20'

15327 X-9

16+50.00




17+25.00




18+25.00




16+25.00




17+00.00




18+00.00




16+00.00




16+75.00




17+50.00

| MARK | REVISION | DATE | BY |
|---|---|---|---|
| --- | --- | --- | --- |
| --- | --- | --- | --- |
| --- | --- | --- | --- |
| --- | --- | --- | --- |

Designed By: AJC
Date: 12/4/2024 12:58 PM
Scale: 1" = 20'

15327

# E WASHINGTON AVE SIDEWALK WIDENING - CROSS SECTIONS

## EAST MADISON BIKEWAYS: SAFE STREETS

MADISON, WI

CONTRACT NO: 8769

\\Gisserver\data\DESIGN\Projects\15327\CAD\Streets\15327EN-XSections_BurrJones-EWash.dwg

15327

X-10

REVISION #1 04-10-2025
CROSS-SECTIONS CREATED AFTER SURVEY OBTAINED AND DESIGN COMPLETED

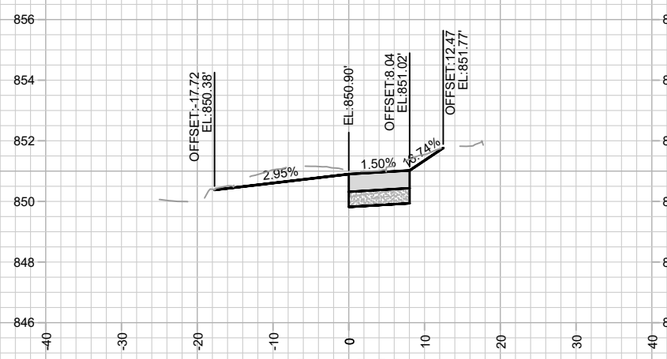


21+00.00

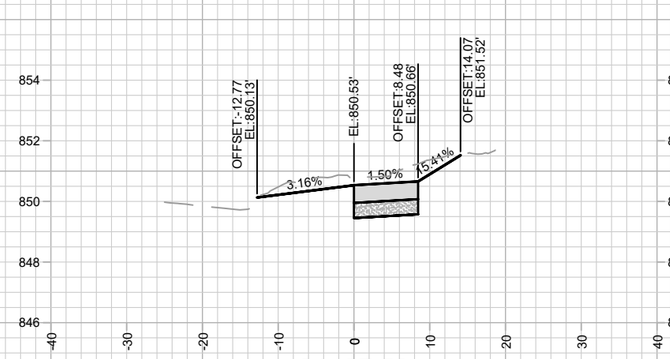


21+37.50

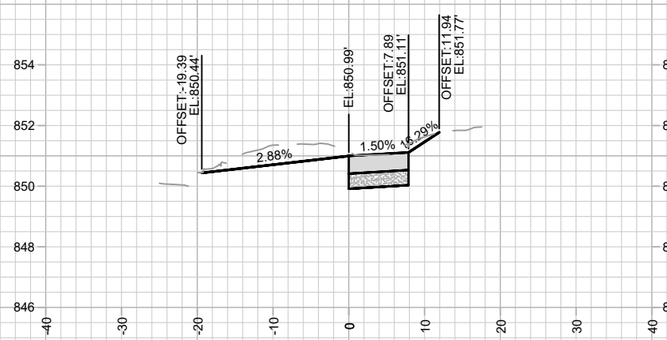


20+87.50

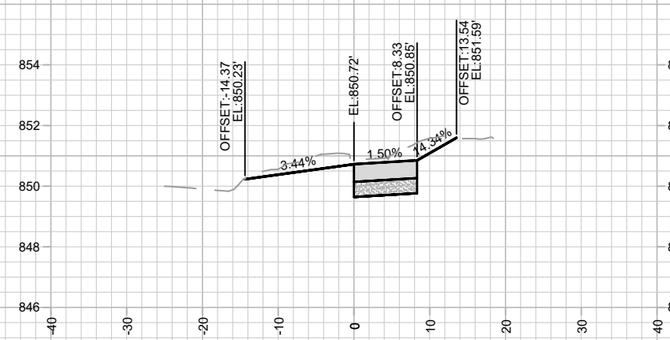


21+25.00

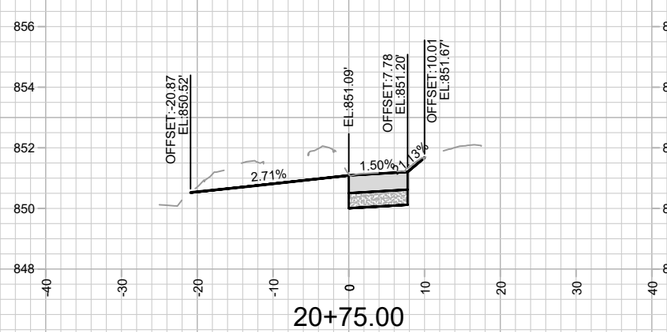


20+75.00

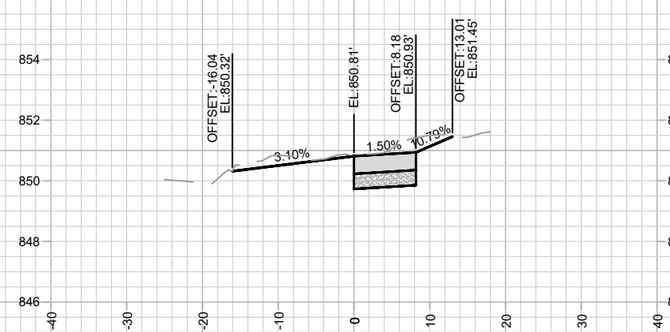


21+12.50

| MARK | REVISION | DATE | BY |
|---|---|---|---|
| --- | --- | --- | --- |
| --- | --- | --- | --- |
| --- | --- | --- | --- |
| --- | --- | --- | --- |

Designed By: AJC Date: 3/27/2025 3:19 PM Scale: 1" = 20'

15327 X-11

15327

N FIRST ST SIDEWALK WIDENING - CROSS SECTIONS

EAST MADISON BIKEWAYS: SAFE STREETS

MADISON, WI

CONTRACT NO: 8769

\\Gisserver\data\DESIGN\Projects\15327\CAD\Streets\15327EN-Corridor_BurrJones-EWash.dwg

15327

X-11

REVISION #1 04-10-2025
CROSS-SECTIONS CREATED AFTER SURVEY OBTAINED AND DESIGN COMPLETED

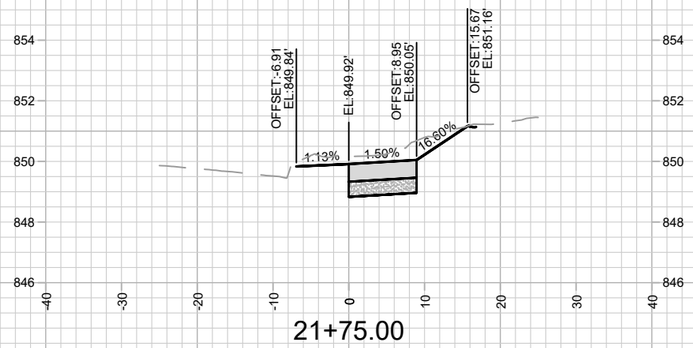


21+75.00

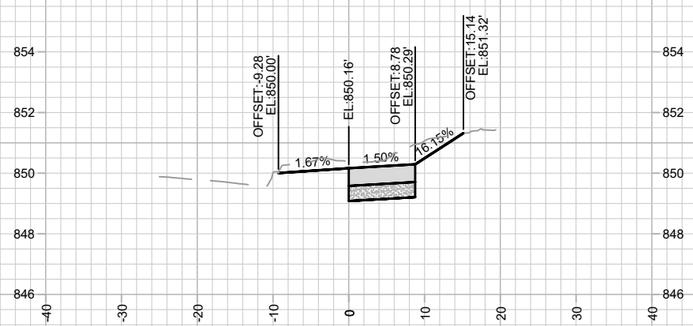


21+62.50

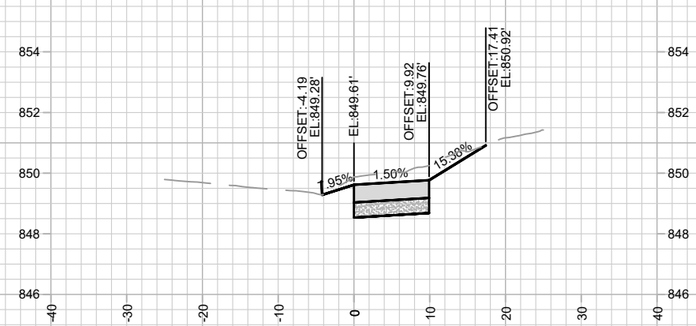


22+00.00

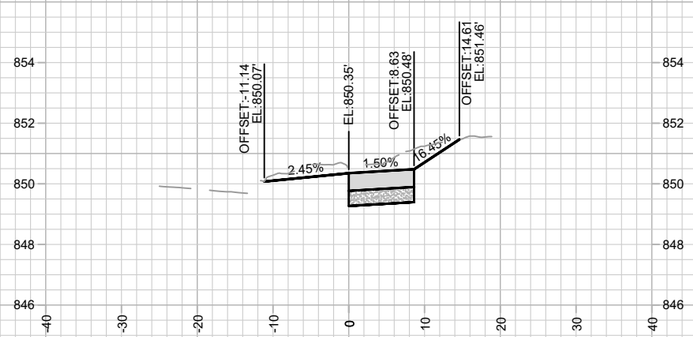


21+50.00

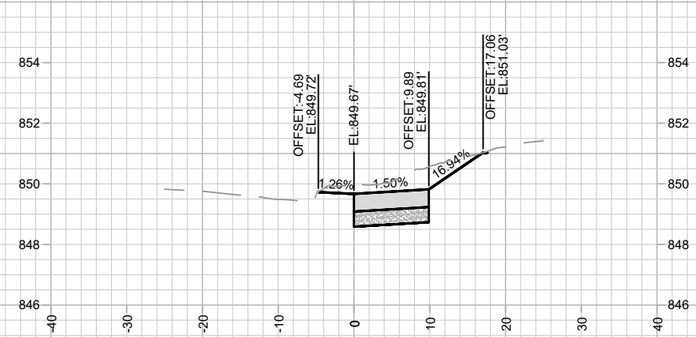


21+87.50

| MARK | REVISION | DATE | BY |
|---|---|---|---|
| --- | --- | --- | --- |
| --- | --- | --- | --- |
| --- | --- | --- | --- |
| --- | --- | --- | --- |

Designed By: AJC | Date: 3/27/2025 3:19 PM | Scale: 1" = 20'

15327 | X-12

15327

N FIRST ST SIDEWALK WIDENING - CROSS SECTIONS

EAST MADISON BIKEWAYS: SAFE STREETS

MADISON, WI

CONTRACT NO: 8769

\\Gisserver\data\DESIGN\Projects\15327\CAD\Streets\15327EN-Corridor_Burr,Jones-EWash.dwg

CITY OF MADISON WISCONSIN

15327

X-12

# SCALE 1:100

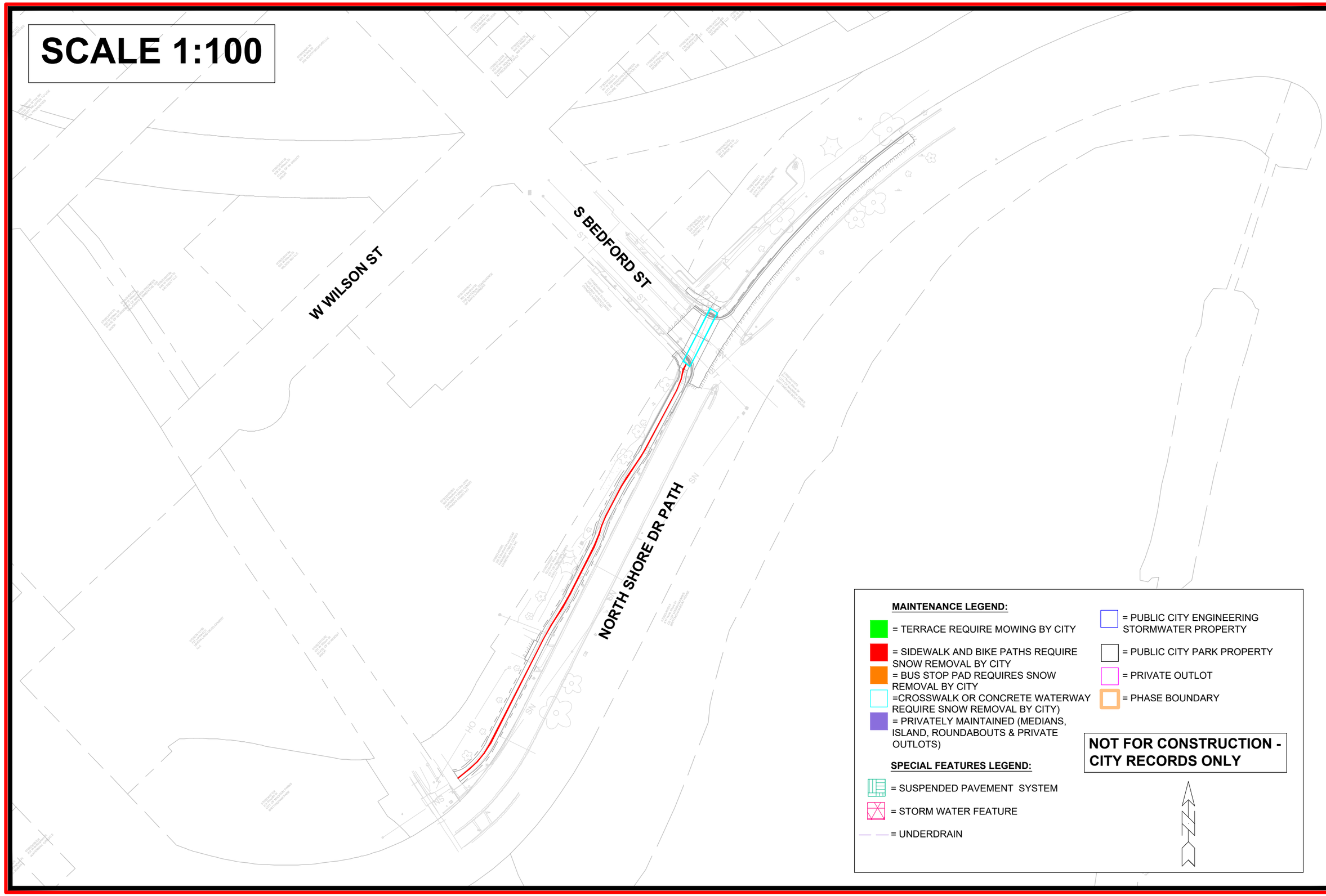


**MAINTENANCE LEGEND:**

- = TERRACE REQUIRE MOWING BY CITY
- = SIDEWALK AND BIKE PATHS REQUIRE SNOW REMOVAL BY CITY
- = BUS STOP PAD REQUIRES SNOW REMOVAL BY CITY
- =CROSSWALK OR CONCRETE WATERWAY REQUIRE SNOW REMOVAL BY CITY)
- = PRIVATELY MAINTAINED (MEDIANS, ISLAND, ROUNDABOUTS & PRIVATE OUTLOTS)
- = PUBLIC CITY ENGINEERING STORMWATER PROPERTY
- = PUBLIC CITY PARK PROPERTY
- = PRIVATE OUTLOT
- = PHASE BOUNDARY

**SPECIAL FEATURES LEGEND:**

- = SUSPENDED PAVEMENT SYSTEM
- = STORM WATER FEATURE
- = UNDERDRAIN

**NOT FOR CONSTRUCTION - CITY RECORDS ONLY**

| MARK | REVISION | DATE | BY |
|---|---|---|---|
| --- | --- | --- | --- |
| --- | --- | --- | --- |
| --- | --- | --- | --- |
| --- | --- | --- | --- |

Designed By: AJC
Date: 12/16/2024 10:23 AM
Scale: ##########

15104

MAINTENANCE MAP - NORTH SHORE DR PATH

NORTH SHORE DR PATH

M:\DESIGN\Projects\15104\CAD\Streets\15104EN-Maintenance.dwg

MADISON, WI

CONTRACT NO: 8769

15104

MN-1

# SCALE 1:20

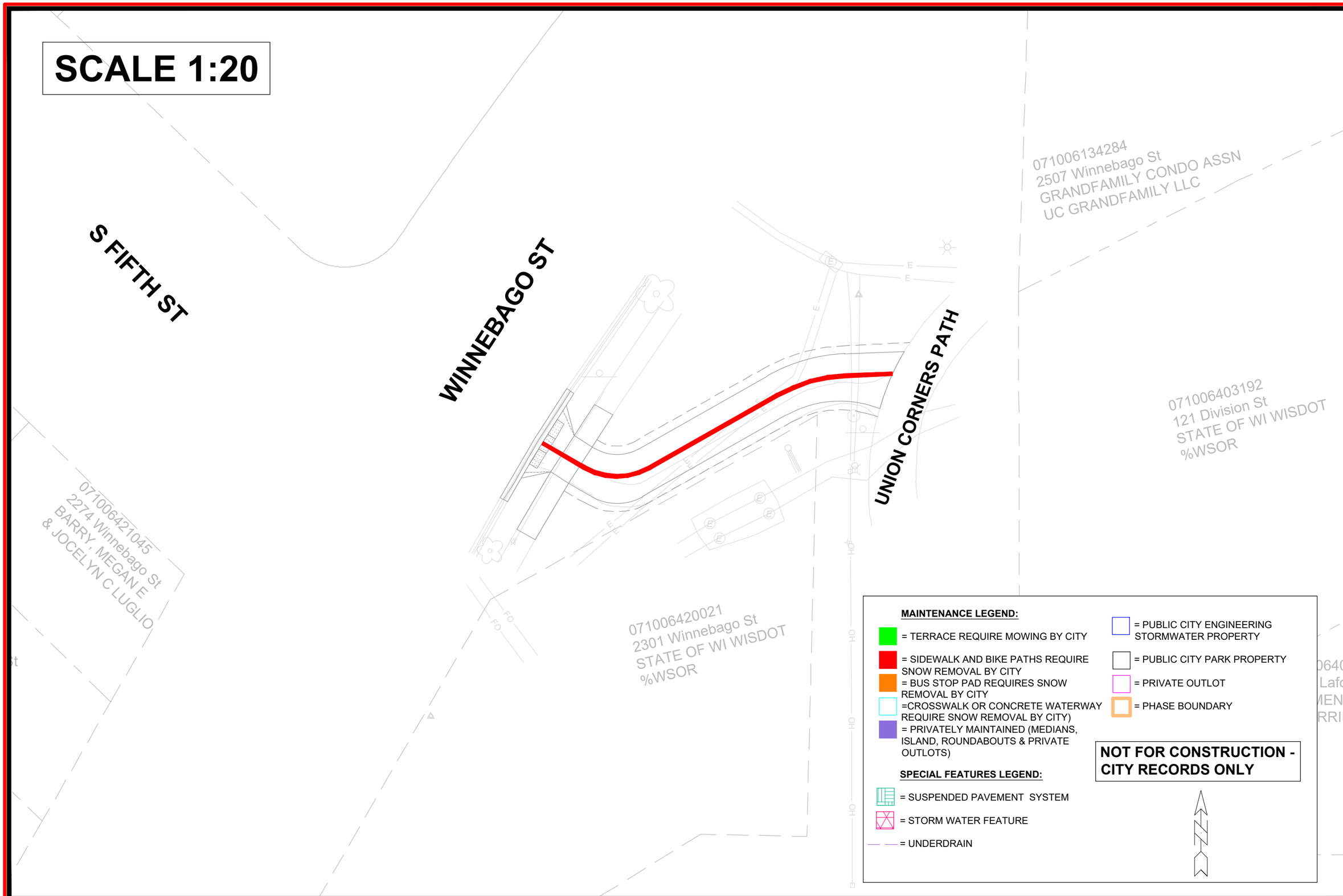


| MARK | REVISION | DATE | BY |
|---|---|---|---|
| --- | --- | --- | --- |
| --- | --- | --- | --- |
| --- | --- | --- | --- |
| --- | --- | --- | --- |

Designed By: AJC
Date: 12/16/2024 10:05 AM
Scale: ########

15327

15327

MAINTENANCE MAP - WINNEBAGO PATH

EAST MADISON BIKEWAYS: SAFE STREETS

MADISON, WI

CONTRACT NO: 8769

\\Gisserver\data\DESIGN\Projects\15327\CAD\Streets\15327EN-MaintenanceMap_Winnebago.dwg

15327

MN-2

# SCALE 1:130

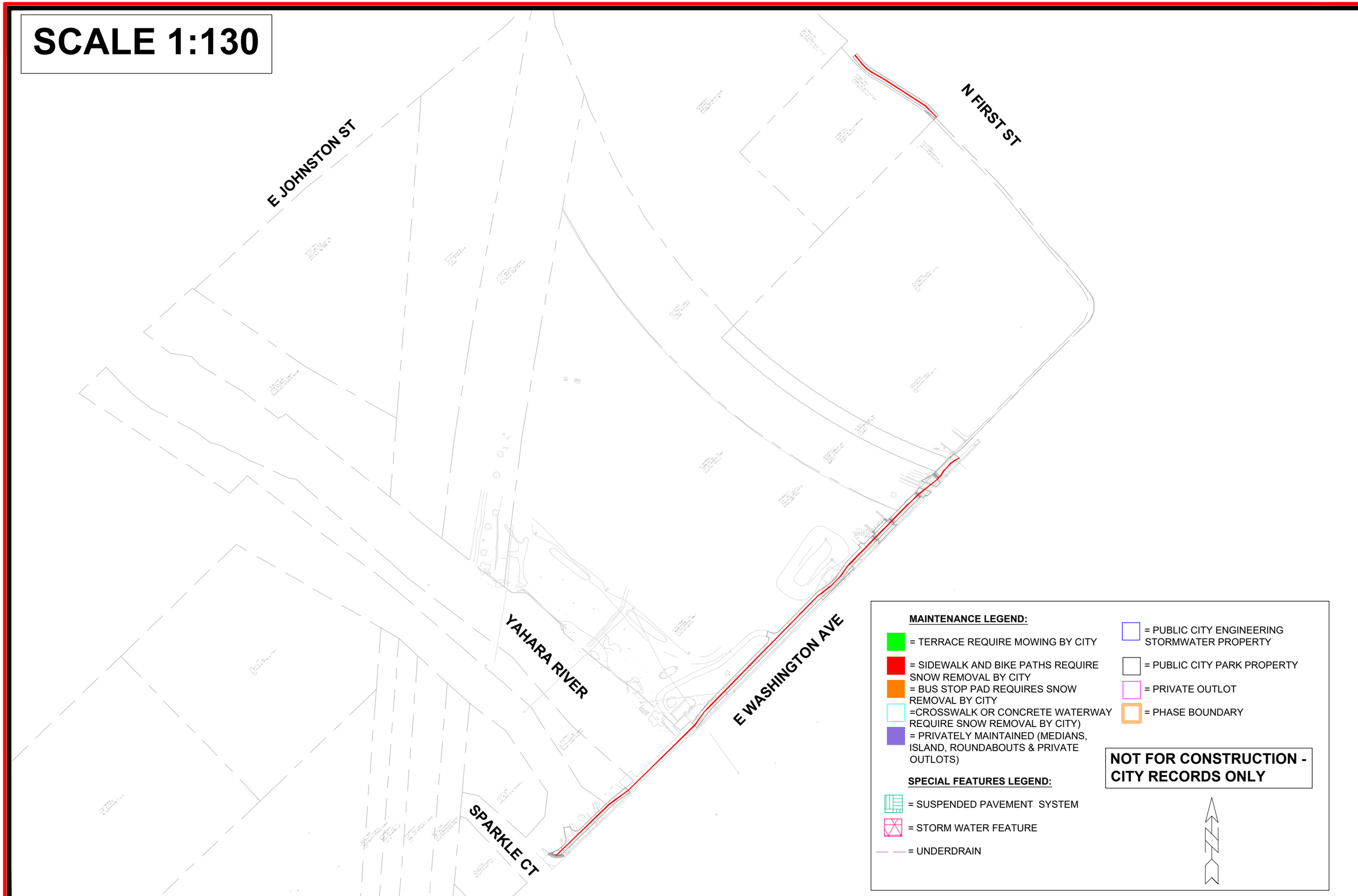


**MAINTENANCE LEGEND:**

- = TERRACE REQUIRE MOWING BY CITY
- = SIDEWALK AND BIKE PATHS REQUIRE SNOW REMOVAL BY CITY
- = BUS STOP PAD REQUIRES SNOW REMOVAL BY CITY
- =CROSSWALK OR CONCRETE WATERWAY REQUIRE SNOW REMOVAL BY CITY)
- = PRIVATELY MAINTAINED (MEDIANS, ISLAND, ROUNDABOUTS & PRIVATE OUTLOTS)
- = PUBLIC CITY ENGINEERING STORMWATER PROPERTY
- = PUBLIC CITY PARK PROPERTY
- = PRIVATE OUTLOT
- = PHASE BOUNDARY

**SPECIAL FEATURES LEGEND:**

- = SUSPENDED PAVEMENT SYSTEM
- = STORM WATER FEATURE
- = UNDERDRAIN

**NOT FOR CONSTRUCTION - CITY RECORDS ONLY**

| MARK | REVISION | DATE | BY |
|---|---|---|---|
| --- | --- | --- | --- |
| --- | --- | --- | --- |
| --- | --- | --- | --- |
| --- | --- | --- | --- |

Designed By: AJC
Date: 12/16/2024 10:04 AM
Scale: ########

15327

MN-3

MAINTENANCE MAP - E WASH & N FIRST ST SIDEWALK WIDENING

EAST MADISON BIKEWAYS: SAFE STREETS

15327

MADISON, WI

CONTRACT NO: 8769

\\Gisserver\data\DESIGN\Projects\15327\CAD\Streets\15327EN-MaintenanceMap_BurrJones-EWash.dwg

15327

MN-3