MADISON WATER UTILITY
FELLAND RESERVOIR BOOSTER INSTALL
MILKY WAY RESERVOIR VALVE INSTALL
2023

CITY PROJECT NO. 14413
CITY CONTRACT NO. 9336

DESIGNED BY:

WISCONSIN
ADAM R. WIEDERHOEFT
E-41559
MADISON
WI
PROFESSIONAL ENGINEER

08/24/2023
(Revised 09/19/2023)

PUBLIC IMPROVEMENT PROJECT
APPROVED ON JUNE 21, 2022
BY THE COMMON COUNCIL OF
MADISON, WISCONSIN

INDEX OF SHEETS

PROJECT LOCATION
1224 FELLAND ROAD

PROJECT LOCATION
435 MILKY WAY

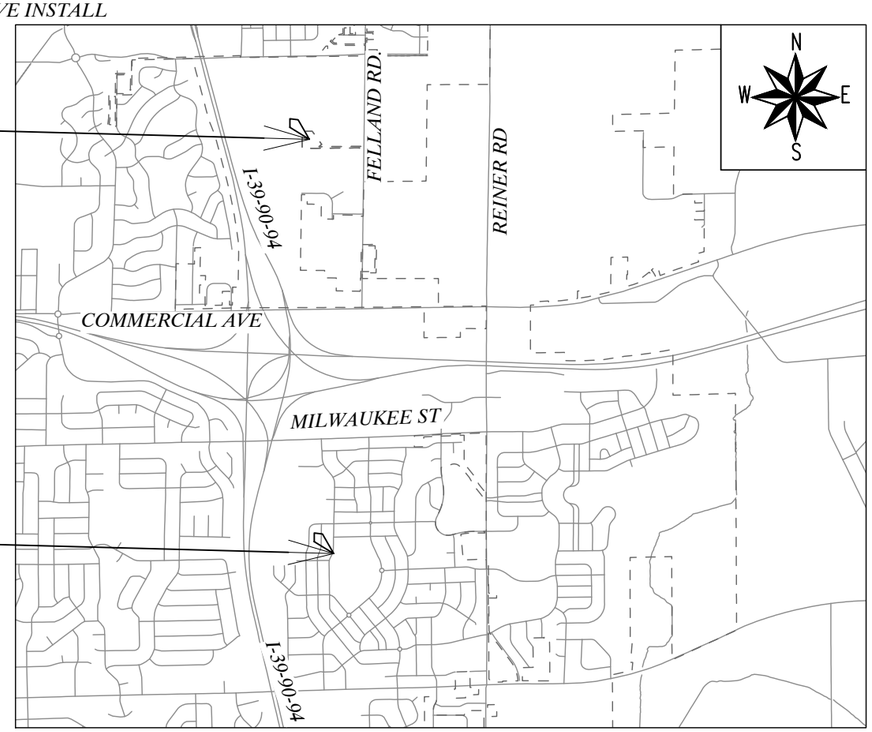

GENERAL NOTES

1. UNLESS OTHERWISE SPECIFIED, ALL CONSTRUCTION SHALL CONFORM TO CITY OF MADISON STANDARD SPECIFICATIONS FOR PUBLIC WORKS CONSTRUCTION, 2023 EDITION. SEE HTTPS://WWW.CITYOFMADISON.COM/BUSINESS/PW/SPECS.CFM

2. PIPE MATERIAL SHALL BE CLASS 52 DUCTILE IRON PIPE
.

3. INSTALLATION OF A NEW PUMP IS PART OF THIS CONTRACT. THE NEW PUMP AND UNIT ELECTRICAL WIRING ARE PROVIDED BY MWU. SEE SUGGESTED SEQUENCE OF DEMOLITION AND CONSTRUCTION ON SHEET W-5 FOR ADDITIONAL NOTES.

4. NEW PUMP IS STORED AT THE UTILITY ENGINEERING BUILDING AT 119 EAST OLIN AVE. ARRANGE WITH UTILITY TO PICK UP PUMP AND TRANSPORT TO JOB SITE.

5. ALL REQUIRED PERMITS ARE THE RESPONSIBILITY OF THE CONTRACTOR.

6. CONTRACTOR IS REQUIRED TO MAINTAIN A SAFE WORKSPACE THROUGHOUT THE PROJECT.

7. WORK SHALL COMMENCE NO MORE THAN 30 DAYS AFTER EXECUTION OF THE CONTRACT AND RECEIPT OF THE START WORK LETTER.

8. PROJECT DURATION IS 30 CALENDAR DAYS FROM START OF WORK.

MADISON WATER UTILITY FELLAND ROAD BOOSTER PUMP INSTALL 14413	SHEET NO. 2/12
APPURTENANCE SCHEDULE	
INSPECTOR: MWU	DRAWN BY: TDP
CHECKED BY: DVH	DATE: 9/12/2023

RESERVOIR 229

NUMBER	SIZE	TYPE	DISPOSITION	NORMAL POSITION	FUNCTION	NOTES
V-1	16"	BUTTERFLY	EXISTING	OPEN	SYSTEM ISOLATION	
V-2	16"	BUTTERFLY	EXISTING	OPEN	ALT./CHECK VALVE ISOLATION	
V-3	16"	BUTTERFLY	EXISTING	OPEN	ALT./CHECK VALVE ISOLATION	
V-4	8"	GATE	EXISTING	OPEN	BYPASS VALVE	
V-5	20"	BUTTERFLY	EXISTING	OPEN	RESERVOIR DISCHARGE ISOLATION	
V-6	12"	BUTTERFLY	PROPOSED	OPEN	DISCHARGE ISOLATION	AUMA ACTUATOR, WIRING MY MWU
V-7	10"	GATE	PROPOSED	OPEN	BOOSTER PUMP ISOLATION	
V-8	8"	GATE	PROPOSED	OPEN	BOOSTER PUMP ISOLATION	
AV-1	16"	ALT. VALVE	EXISTING	OPEN	N/A	PILOT RETROFIT KIT BY MWU
CV-1	20"	CHECK VALVE	EXISTING	-	PREVENT BACKFLOW AT RES. OUTLET	
CV-2	8"	CHECK VALVE	PROPOSED	-	PREVENT BACKFLOW AT BOOSTER PUMP	
M-1	16"	METER	EXISTING	-		
M-2	20"	METER	PROPOSED	-		METER & WIRING FURNISHED BY MWU
M-3	12"	METER	PROPOSED	-		METER & WIRING FURNISHED BY MWU

RESERVOIR 225

NUMBER	SIZE	TYPE	DISPOSITION	NORMAL POSITION	FUNCTION	NOTES
V-9	12"	BUTTERFLY	EXISTING	OPEN	SYSTEM ISOLATION	
V-10	12"	BUTTERFLY	EXISTING	OPEN	SYSTEM ISOLATION	
V-11	12"	BUTTERFLY	EXISTING	OPEN	SYSTEM ISOLATION	
CV-3	12"	CHECK	EXISTING	-	BACK-FLOW PREVENTION AT OUTLET	
AV-2	12"	ALTITUDE	PROPOSED	-	CONTROL RESERVOIR LEVEL	VALVE FURNISHED BY MWU

GENERAL NOTES

1. CHECK VALVE SHALL BE A FLANGED SWING CHECK VALVE WITH OUTSIDE LEVER AND WEIGHT EQUIPPED WITH AN AIR-CUSHION CHAMBER TO CUSHION THE CLOSING OF THE VALVE DISC. THE VALVE SHALL BE MANUFACTURED IN ACCORDANCE WITH AWWA C508. CHECK VALVE SHALL BE MANUFACTURED BY GA INDUSTRIES OR APPROVED EQUIVALENT.

2. GATE VALVE SHALL BE RESILIENT WEDGE DESIGN PER AWWA C509, FLANGED AND EQUIPPED WITH HANDWHEEL OPERATOR. GATE VALVE SHALL BE MANUFACTURED BY KENNEDY, MUELLER OR CLOW.

3. BUTTERFLY VALVES SHALL BE AWWA C504, FLANGED SHORT BODY, CLASS 150B, EQUIPPED WITH STAINLESS SHAFT, TOP-MOUNTED HAND WHEEL OPERATORS AND CAST IRON VALVE DISC. BUTTERFLY VALVES SHALL BE MANUFACTURED BY KENNEDY OR MUELLER.

4. ALL MATERIALS FURNISHED BY CONTRACTOR, UNLESS SPECIFIED

MADISON WATER UTILITY FELLAND ROAD BOOSTER PUMP INSTALL 14413	SHEET NO. 3/12

EXISTING FLOOR PLAN

INSPECTOR: MWU	DRAWN BY: TDP
CHECKED BY: DVH	DATE: 9/12/2023

PLAN
3/16"=1'

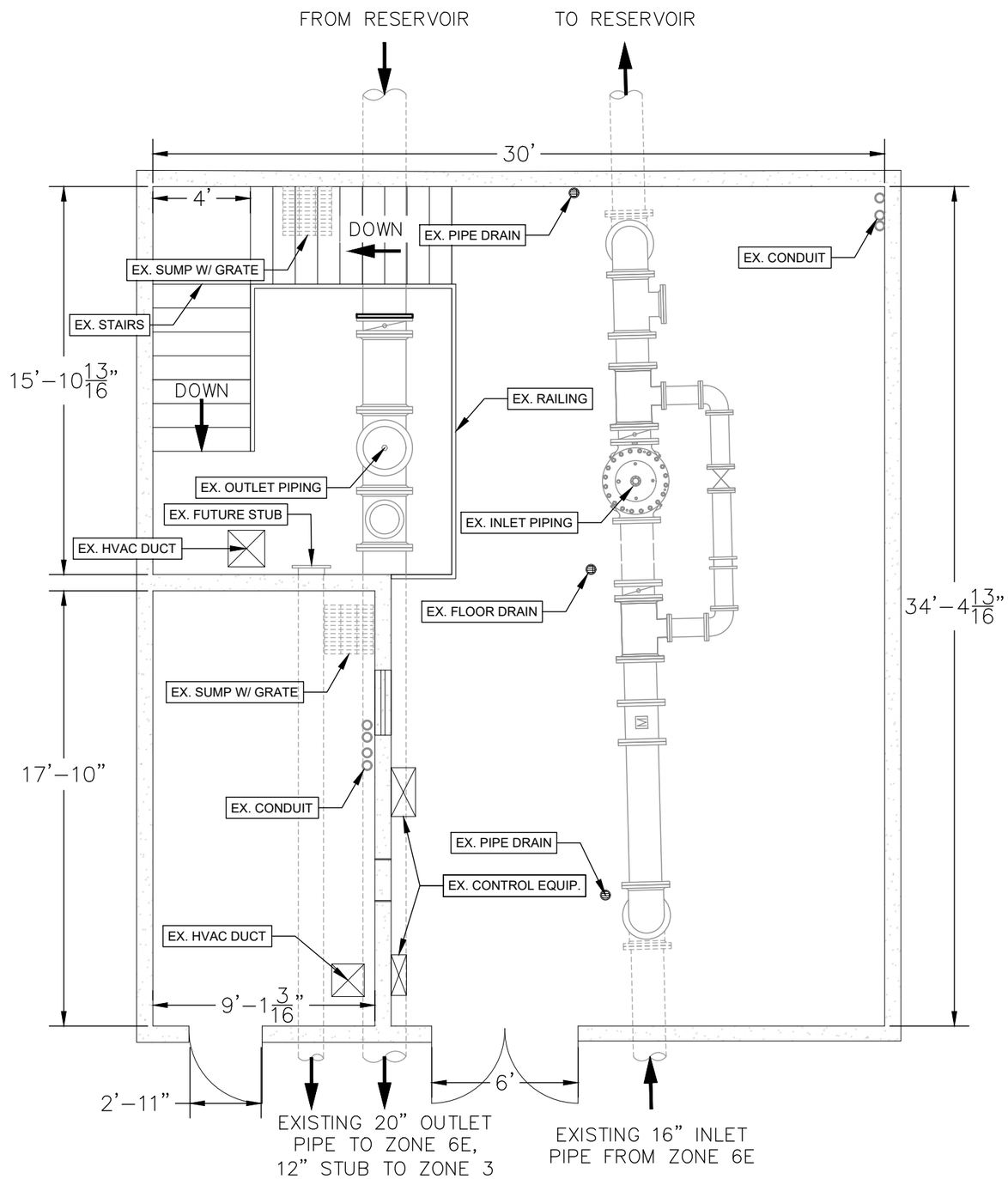

PLOT SCALE: 1" = 40'
PLOT NAME: _____
REV. DATE: ___
ORIGINATOR: CITY_OF_MADISON_WATER_UTILITY

FILE NAME: F:\Wucommon\Facilities\Reservoir 229-Felland\Booster Pump 2023\Felland Booster\Reservoir 229 Booster.dwg
DATE: 9/19/2023 10:01 AM

MADISON WATER UTILITY FELLAND ROAD BOOSTER PUMP INSTALL 14413	SHEET NO. 4/12

EXISTING PIPING PLAN

INSPECTOR: MWU	DRAWN BY: TDP
CHECKED BY: DVH	DATE: 9/12/2023

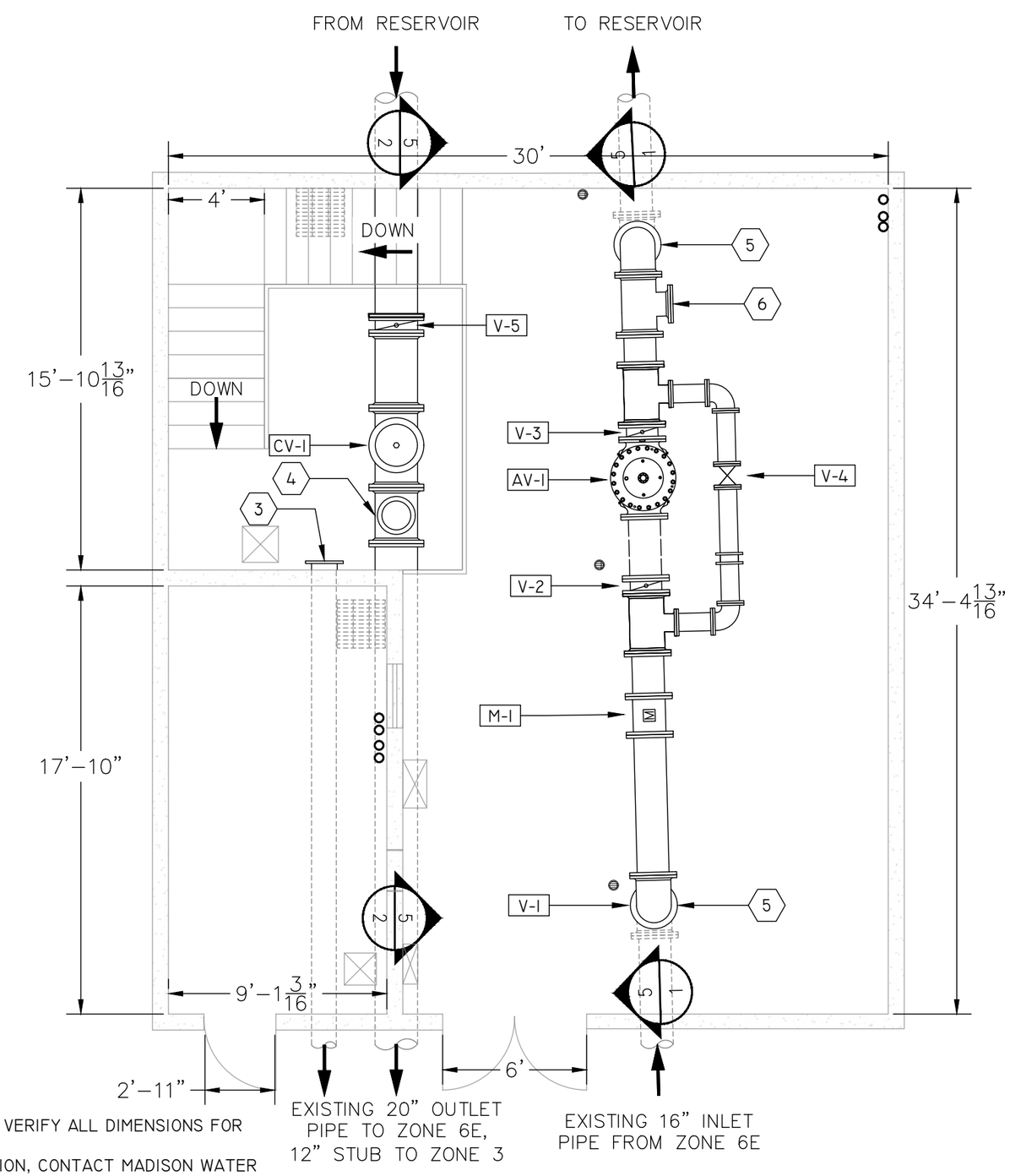

PLAN
3/16"=1'

LEGEND

- BUTTERFLY VALVE
- CHECK VALVE
- EXPANSION JOINT, FLEXIBLE COUPLING
- METER
- FLANGED PIPE SECTION, PIPE DIAMETER
- REDUCER
- V-# - VALVE NUMBER, REFER TO SEQUENCE OF DEMOLITION AND CONSTRUCTION, SHEET W-4
- ALTITUDE VALVE
- GATE VALVE
- AIR RELEASE VALVE

KEYED NOTES

1. 16-IN RESERVOIR INLET PIPING (SECTION LINE)
2. 20-IN RESERVOIR OUTLET PIPING (SECTION LINE)
3. 12-IN STUB TO ZONE 3
4. 20-IN X 12-IN TEE W/ PLUG
5. PIPING TRANSITION INTO FLOOR
6. 12-IN X 12-IN TEE W/ PLUG

GENERAL NOTES

A. DIMENSIONS SHOWN MAY VARY BY 1"-2". VERIFY ALL DIMENSIONS FOR FABRICATED PIPING.
B. FOR FURTHER, OR CLARIFIED INFORMATION, CONTACT MADISON WATER UTILITY.
C. SEE PHOTOS ON SHEETS 11 AND 12 FOR ADDITIONAL DETAIL.

PLOT SCALE: 1" = 40'
PLOT NAME:
REV. DATE:
ORIGINATOR: CITY_OF_MADISON_WATER_UTILITY

FILE NAME: F:\Wucommon\Facilities\Reservoir 229-Felland\Booster Pump 2023\Felland Booster\Reservoir 229 Booster.dwg
DATE: 9/19/2023 10:01 AM

MADISON WATER UTILITY FELLAND ROAD BOOSTER PUMP INSTALL 14413	SHEET NO. 5/12

EXISTING PIPING SECTIONS

INSPECTOR: MWU	DRAWN BY: TDP
CHECKED BY: DVH	DATE: 9/12/2023

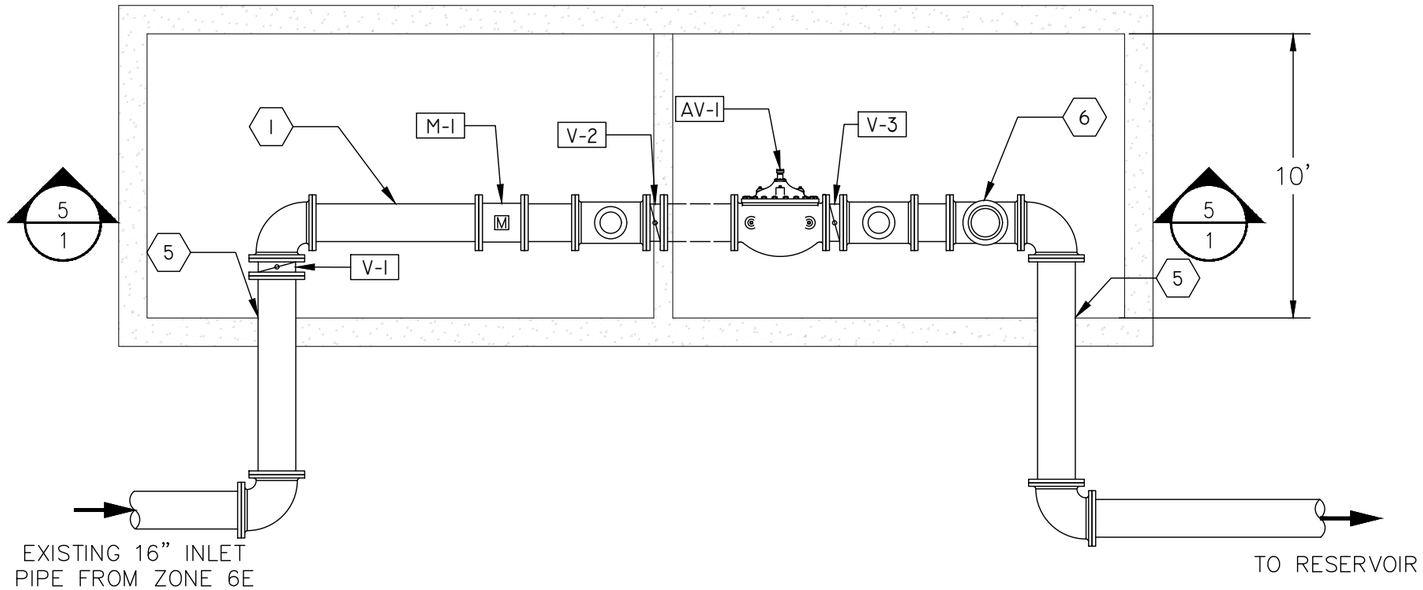

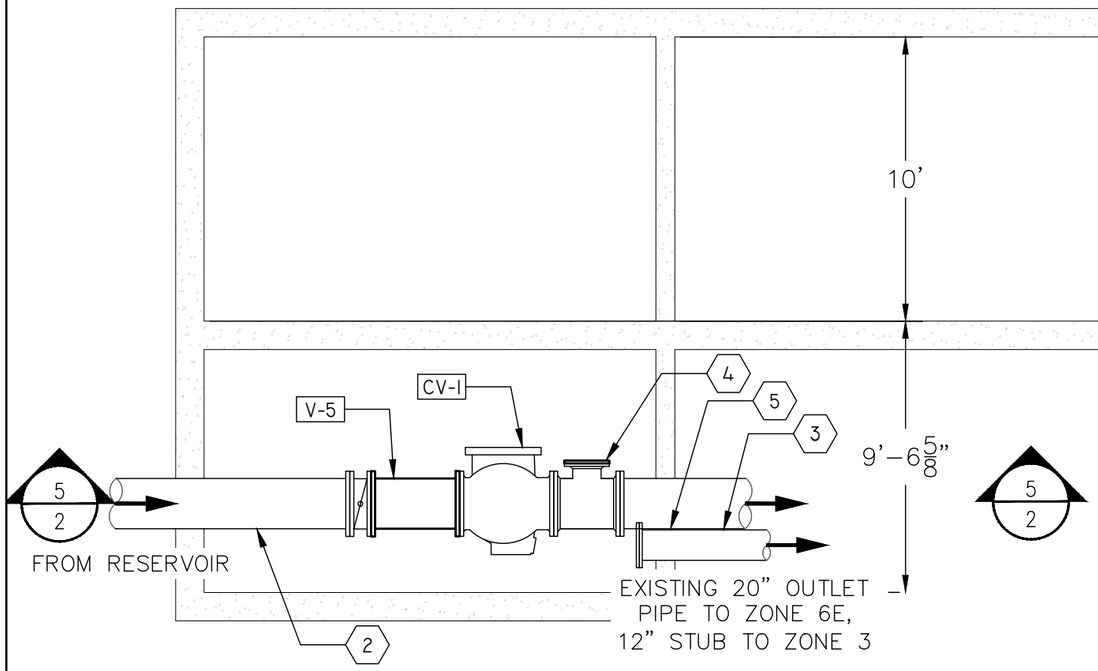

GENERAL NOTES

A. VERIFY ALL DIMENSIONS

KEYED NOTES

1. 16-IN RESERVOIR INLET PIPING
2. 20-IN RESERVOIR OUTLET PIPING
3. 12-IN STUB TO ZONE 3 (CAPPED)
4. 20-IN X 12-IN TEE W/ PLUG
5. PIPING TRANSITION INTO FLOOR/WALL
6. 16-IN X 12-IN TEE W/ PLUG

LEGEND

- BUTTERFLY VALVE
- CHECK VALVE
- EXPANSION JOINT, FLEXIBLE COUPLING
- METER
- FLANGED PIPE SECTION, PIPE DIAMETER
- REDUCER

V-# - VALVE NUMBER, REFER TO SEQUENCE OF DEMOLITION AND CONSTRUCTION, SHEET W-4

- ALTITUDE VALVE
- GATE VALVE
- AIR RELEASE VALVE

PLOT SCALE: 1" = 40'

PLOT NAME: _____

REV. DATE: ---

ORIGINATOR: CITY_OF_MADISON_WATER_UTILITY

FILE NAME: F:\Wucommon\Facilities\Reservoir 229-Felland\Booster Pump 2023\Felland Booster\Reservoir 229 Booster.dwg

DATE: 9/19/2023 10:01 AM

MADISON WATER UTILITY FELLAND ROAD BOOSTER PUMP INSTALL 14413	SHEET NO. 6/12

DEMOLITION & SEQUENCING PLAN

INSPECTOR: MWU	DRAWN BY: TDP
CHECKED BY: DVH	DATE: 9/12/2023

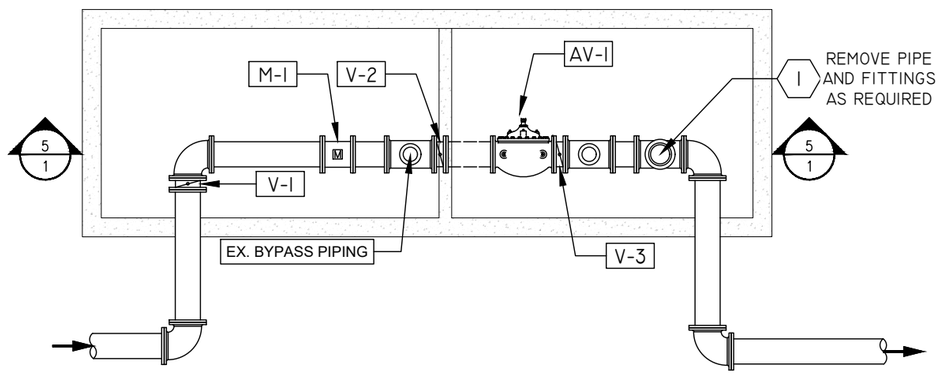

SECTION
1/8"=1'

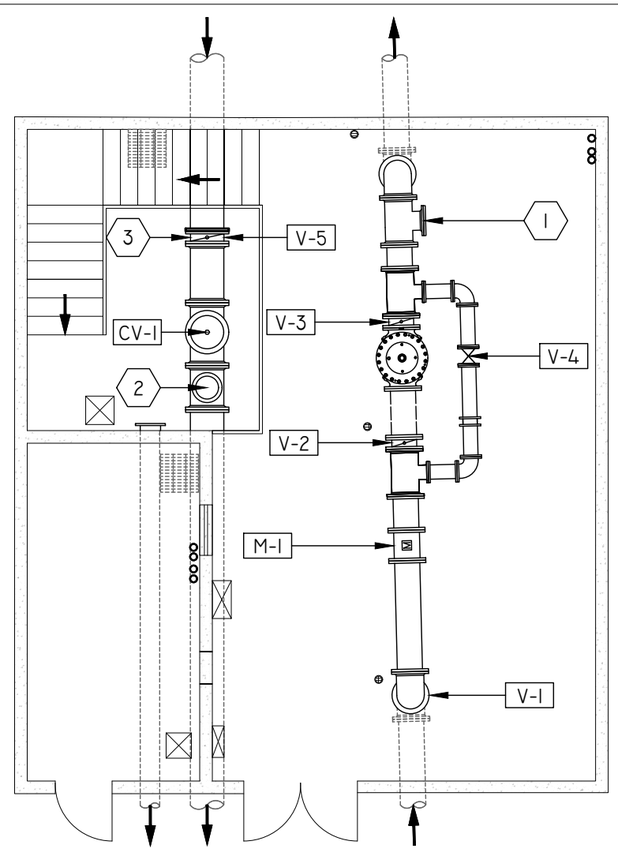

PLAN
1/8"=1'

GENERAL DEMOLITION AND CONSTRUCTION NOTES

A. PRESENT PROPOSED DEMOLITION PLAN AND CONSTRUCTION SEQUENCE FOR REVIEW BY MWU.

B. REFER TO VALVE SCHEDULE, SHEET W-1, EXISTING FLOOR PLAN, SHEET W-2, PROPOSED PIPING PLAN, SHEET W-6 AND PROPOSED PIPING SECTION, SHEET W-7.

C. WORK SHALL NOT START WITHOUT AN AGREED UPON SEQUENCE OF DEMOLITION AND CONSTRUCTION.

SUGGESTED SEQUENCE OF DEMOLITION AND CONSTRUCTION

A. COORDINATE WITH MWU A MINIMUM OF 2 WORKING DAYS PRIOR TO ANY SHUT DOWN OF THE FACILITY.

B. MWU SHALL CLOSE VALVES V-2, V-3, V-5, AND ANY APPROPRIATE YARD VALVES (V-8 & V-9).

C. REMOVE EXISTING PIPE/FITTINGS AS SHOWN.

D. INSTALL NEW PUMP, BASE (AS NECESSARY), AND CONFIGURATION AS SHOWN ON PROPOSED SHEETS.

F. DISINFECT ALL NEW PIPING AND PUMP.

G. PRESSURE TEST ALL NEW PIPING AND NEW PUMP.

H. FOLLOWING INSTALLATION OF THE PUMP, MWU WILL INSTALL WIRING AND CONTROLS.

I. ASSIST MWU IN TESTING AND STARTUP OF THE PUMP. MWU WILL PROVIDE PUMP VENDOR INSPECTION OF THE INSTALLATION PRIOR TO STARTUP.

J. PUMP OPERATION, INCLUDING, BUT NOT LIMITED TO PUMPING CAPACITY; VIBRATION; AND VFD OPERATION WILL BE TESTED PRIOR TO ACCEPTANCE OF THE WORK.

KEYED NOTES

1. RELOCATE/ROTATE EX. 16-IN X 12-IN TEE AS SHOWN ON PROPOSED SHEETS. SALVAGE EX. 12-IN PLUG

2. REMOVE AND RELOCATE EX. 20-IN X 12-IN TEE, INSTALL PIPE AND AND ADAPTERS, AS REQUIRED, AS SHOWN ON PROPOSED SHEETS.

3. RELOCATE EX. 20-IN VALVE, V-5, AS SHOWN IN PROPOSED SHEETS

PLOT SCALE: 1" = 40'
PLOT NAME: ____
REV. DATE: ____
ORIGINATOR: CITY_OF_MADISON_WATER_UTILITY

FILE NAME: F:\Wucommon\Facilities\Reservoir 229-Felland\Booster Pump 2023\Felland Booster\Reservoir 229 Booster.dwg DATE: 9/19/2023 10:01 AM

MADISON WATER UTILITY FELLAND ROAD BOOSTER PUMP INSTALL 14413	SHEET NO. 7/12

PROPOSED PIPING PLAN

INSPECTOR: MWU	DRAWN BY: TDP
CHECKED BY: DVH	DATE: 9/12/2023

PLAN
3/16"=1'

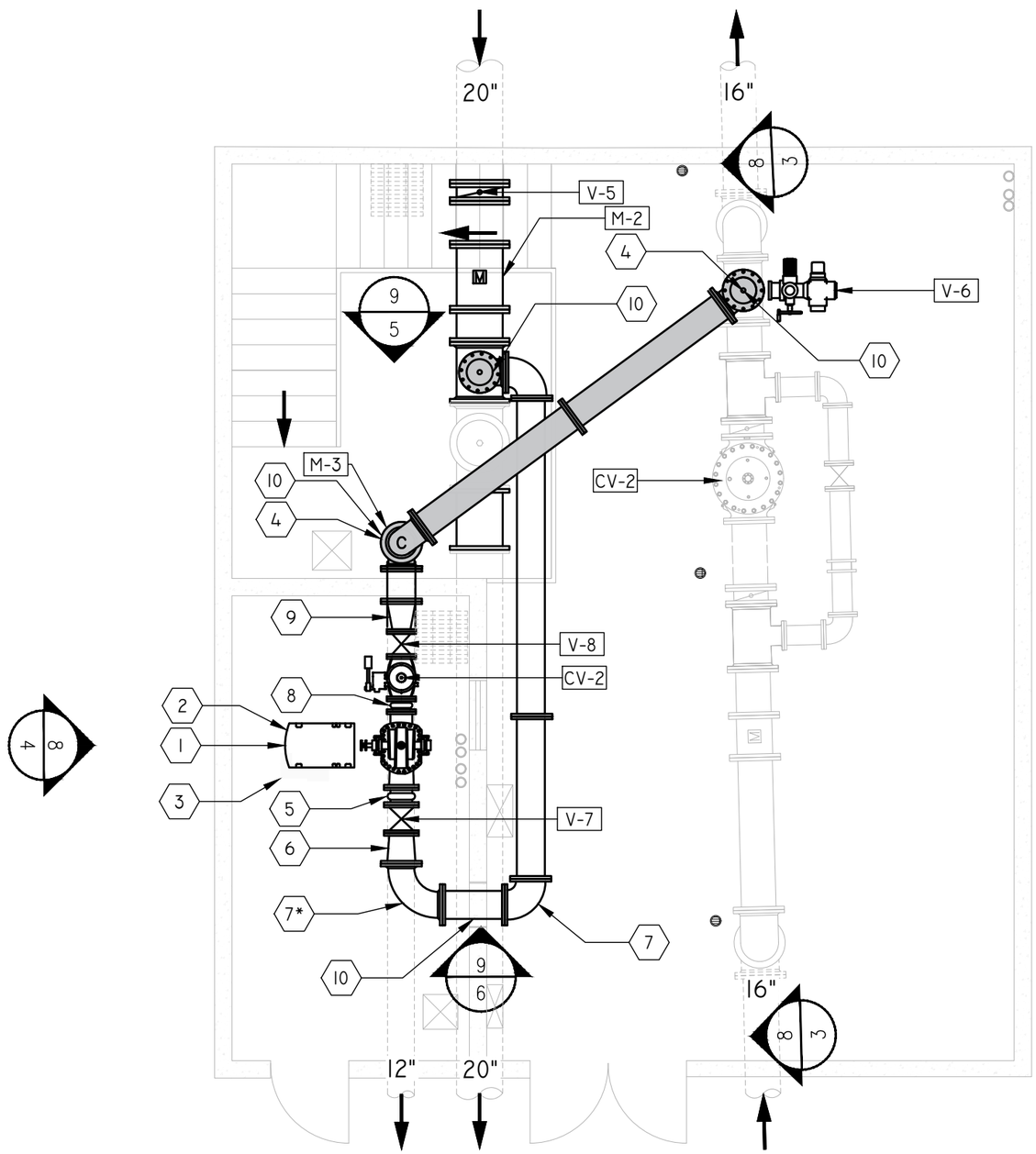

GENERAL NOTES

A. ALL NEW VALVES SHALL HAVE WHEELED OPERATORS TO MATCH EXISTING

B. PROVIDE SPACERS AND FLANGE ADAPTERS AS NECESSARY

C. METERS FURNISHED BY MWU

KEYED NOTES

1. CONSTRUCT CONCRETE BASE AS NECESSARY TO FIT AND SUPPORT NEW PUMP AND MOTOR
2. TRANSPORT AND INSTALL NEW SPLIT CASE CENTRIFUGAL PUMP & MOTOR (PROVIDED BY MWU)
3. EXISTING ELECTRICAL POWER SUPPLY TO BE USED AND ROUTED BY MWU
4. CONNECT NEW PUMP TO EXISTING PIPING, AS SHOWN ON PROPOSED PLAN AND SECTION SHEETS
5. RESTRAINED 10-IN EXPANSION JOINT.
6. RESTRAINED 12-IN X 10-IN REDUCER.
7. 12-IN 90° BEND (TYPICAL) * LONG RADIUS
8. RESTRAINED 8-IN EXPANSION JOINT.
9. RESTRAINED 12-IN X 8-IN REDUCER
10. SEE SECTION VIEW SHEETS (TYPICAL)

PLOT SCALE: 1" = 40'
PLOT NAME:
REV. DATE: ---
ORIGINATOR: CITY_OF_MADISON_WATER_UTILITY

MADISON WATER UTILITY FELLAND ROAD BOOSTER PUMP INSTALL 14413	SHEET NO. 8/12

PROPOSED PIPING SECTIONS

INSPECTOR: MWU	DRAWN BY: TDP
CHECKED BY: DVH	DATE: 9/12/2023

SECTION

3/8"=1'

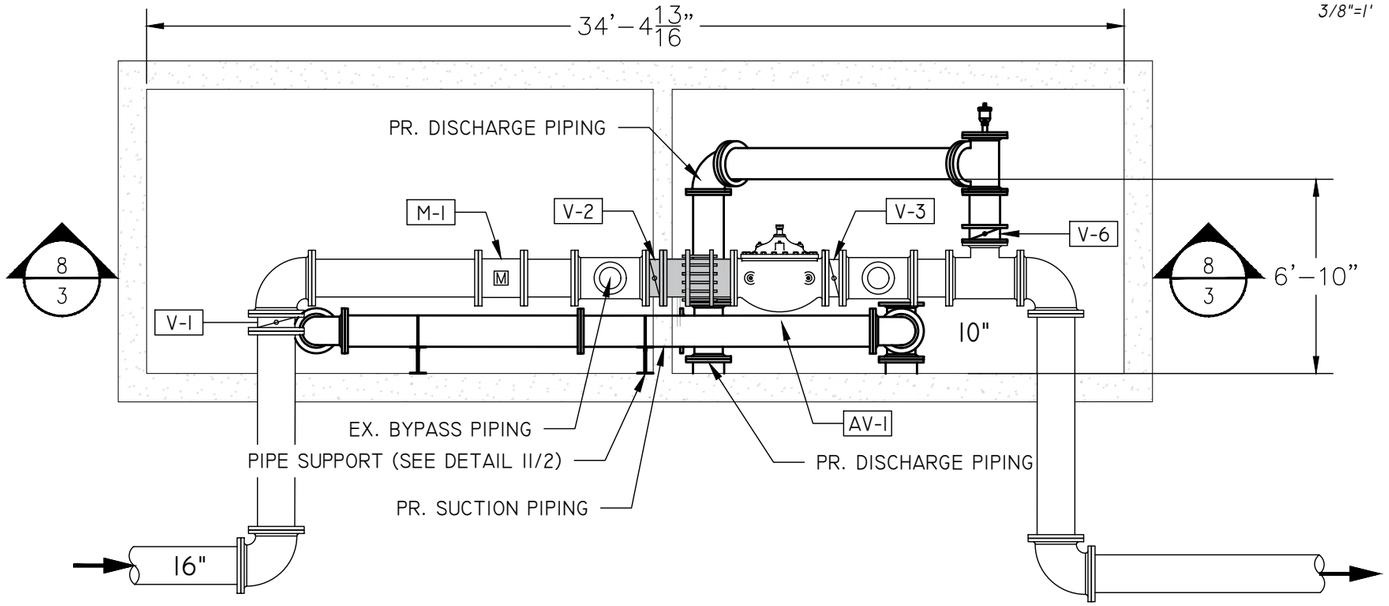

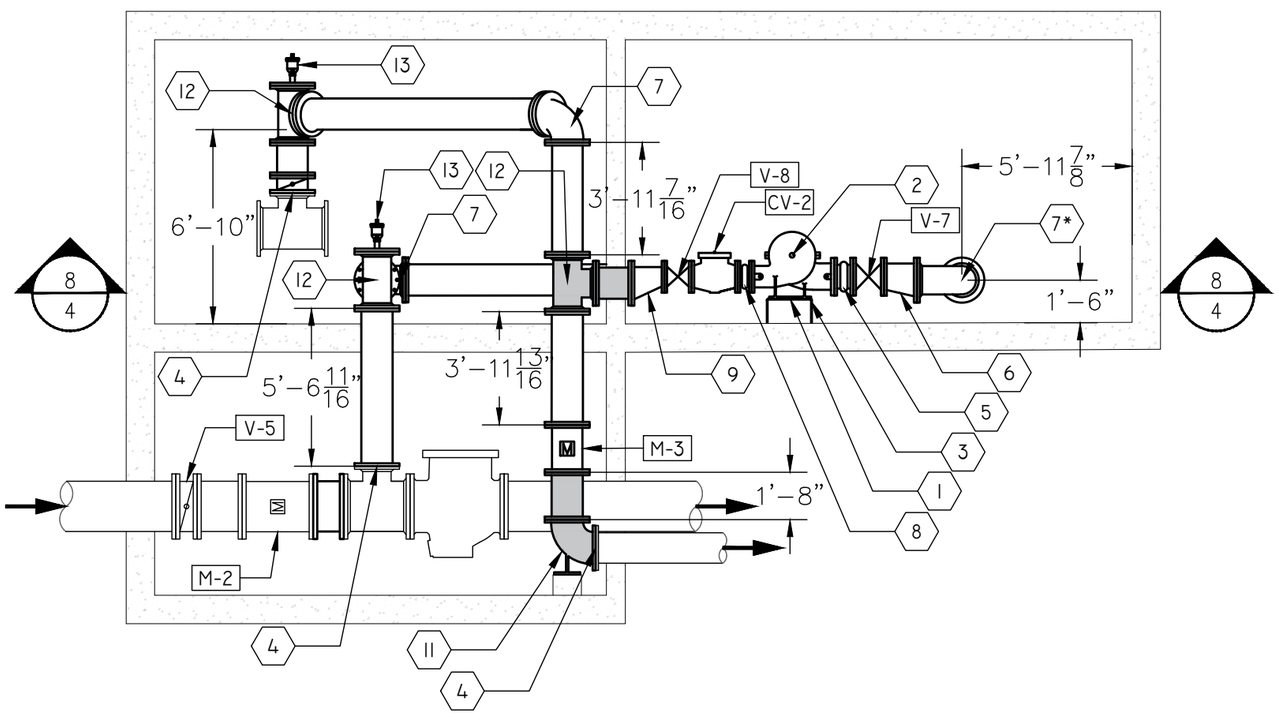

GENERAL NOTES

A. ALL NEW VALVES SHALL HAVE WHEELED OPERATORS TO MATCH EXISTING

B. PROVIDE SPACERS AND FLANGE ADAPTERS AS NECESSARY

C. METERS FURNISHED BY MWU

KEYED NOTES

1. CONSTRUCT CONCRETE BASE AS NECESSARY TO FIT AND SUPPORT NEW PUMP AND MOTOR
2. TRANSPORT AND INSTALL NEW SPLIT CASE CENTRIFUGAL PUMP & MOTOR (PROVIDED BY MWU)
3. EXISTING ELECTRICAL POWER SUPPLY TO BE USED AND ROUTED APPROXIMATELY AS SHOWN (PROVIDED BY MWU)
4. CONNECT PROPOSED PUMP PIPING TO EXISTING PIPING, AS SHOWN ON PROPOSED PLAN AND SECTION SHEETS
5. RESTRAINED 10-IN EXPANSION JOINT.
6. RESTRAINED 12-IN X 10-IN ECCENTRIC REDUCER.
7. 12-IN 90° BEND (TYPICAL) * LONG RADIUS
8. RESTRAINED 8-IN EXPANSION JOINT.
9. RESTRAINED 12-IN X 8-IN ECCENTRIC REDUCER
10. SEE SECTION VIEW SHEETS (TYPICAL)
11. 12-IN BASE 90° BEND W/ CONCRETE BASE, SEE DETAIL 11/3
12. 12-IN X 12-IN TEE
13. 12-IN BLIND FLANGE W/ TAP & AIR RELEASE VALVE SEE DETAIL 11/5

PLOT SCALE: 1" = 40'

PLOT NAME:

REV. DATE: ---

ORIGINATOR: CITY_OF_MADISON_WATER_UTILITY

FILE NAME: F:\Wucommon\Facilities\Reservoir 229-Felland\Booster Pump 2023\Felland Booster\Reservoir 229 Booster.dwg

DATE: 9/19/2023 10:01 AM

MADISON WATER UTILITY FELLAND ROAD BOOSTER PUMP INSTALL 14413	SHEET NO. 9/12

PROPOSED SECTIONS

INSPECTOR: MWU	DRAWN BY: TDP
CHECKED BY: DVH	DATE: 9/12/2023

SECTION
3/16"=1'

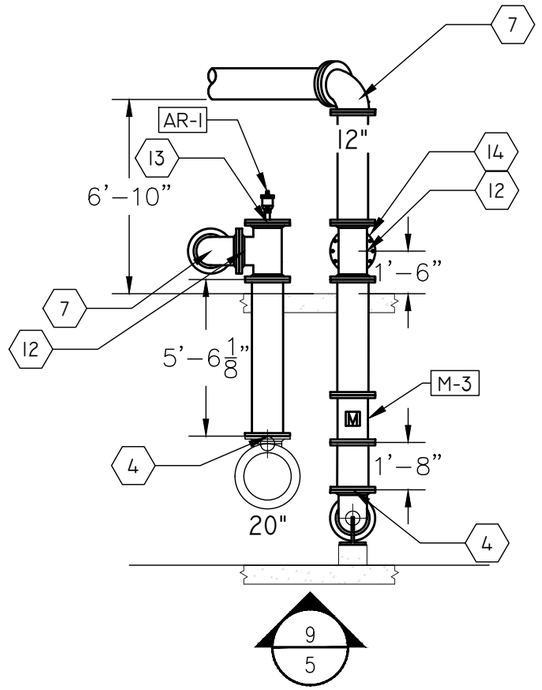

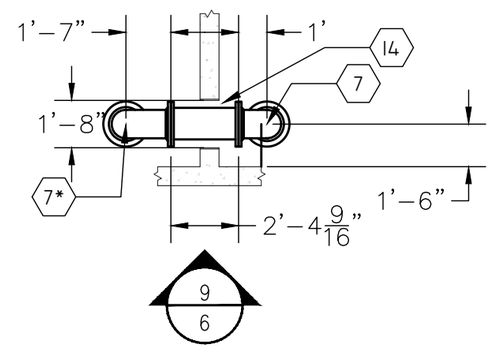

RESERVOIR 229 PIPING SECTION

FACING SOUTHEAST

SECTION
3/16"=1'

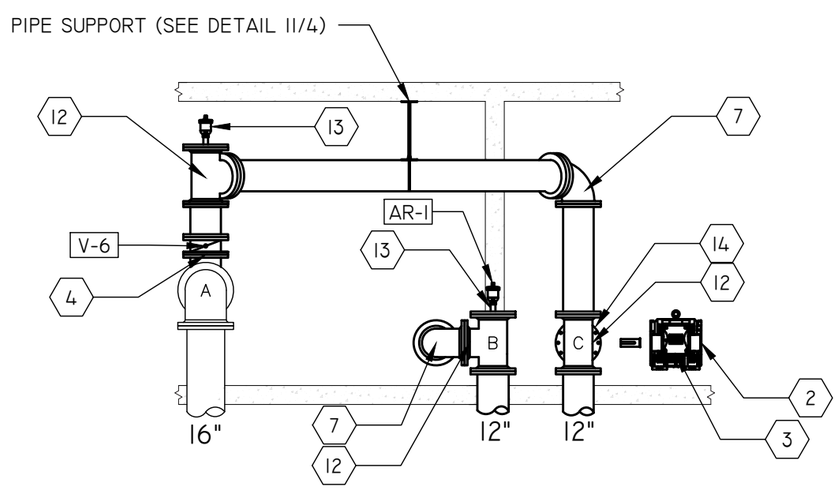

GENERAL NOTES

A. ALL NEW VALVES SHALL HAVE WHEELED OPERATORS TO MATCH EXISTING

B. PROVIDE SPACERS AND FLANGE ADAPTERS AS NECESSARY

C. METERS FURNISHED BY MWU

KEYED NOTES

1. CONSTRUCT CONCRETE BASE AS NECESSARY TO FIT AND SUPPORT NEW PUMP AND MOTOR
2. TRANSPORT AND INSTALL NEW SPLIT CASE CENTRIFUGAL PUMP & MOTOR (PROVIDED BY MWU)
3. EXISTING ELECTRICAL POWER SUPPLY TO BE USED AND ROUTED APPROXIMATELY AS SHOWN (PROVIDED BY MWU)
4. CONNECT PROPOSED PUMP PIPING TO EXISTING PIPING, AS SHOWN ON PROPOSED PLAN AND SECTION SHEETS
5. RESTRAINED 10-IN EXPANSION JOINT.
6. RESTRAINED 12-IN X 10-IN REDUCER.
7. 12-IN 90° BEND (TYPICAL) * LONG RADIUS
8. RESTRAINED 8-IN EXPANSION JOINT.
9. RESTRAINED 12-IN X 8-IN REDUCER
10. SEE SECTION VIEW SHEETS (TYPICAL)
11. 12-IN BASE 90° BEND
12. 12-IN X 12-IN TEE
13. 12-IN BLIND FLANGE W/ TAP & AIR RELEASE VALVE
14. WALL PENETRATION (TYPICAL) SEE DETAIL

PLOT SCALE: 1" = 40'
PLOT NAME:
REV. DATE:
ORIGINATOR: CITY_OF_MADISON_WATER_UTILITY

FILE NAME: F:\Wucommon\Facilities\Reservoir 229-Felland\Booster Pump 2023\Felland Booster\Reservoir 229 Booster.dwg
DATE: 9/19/2023 10:01 AM

MADISON WATER UTILITY FELLAND ROAD BOOSTER PUMP INSTALL 14413	SHEET NO. 10/12

EXISTING SITE PHOTOS

INSPECTOR: MWU	DRAWN BY: TDP
CHECKED BY: DVH	DATE: 9/12/2023

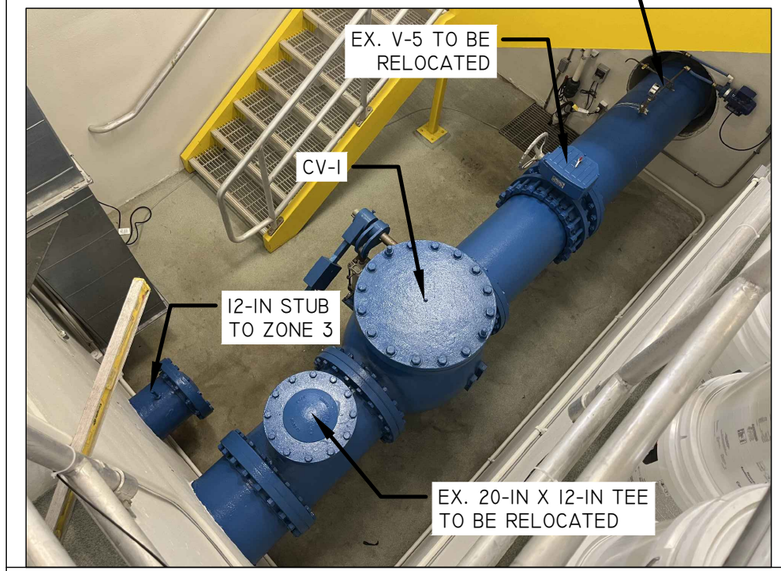

EXISTING RESERVOIR OUTLET PIPING
FACING NORTHWEST CORNER

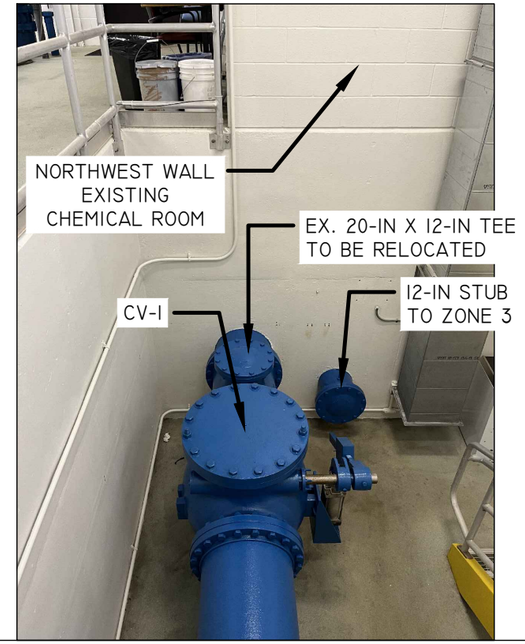

EXISTING RESERVOIR OUTLET PIPING
FACING SOUTHEAST

EXISTING CHEMICAL ROOM
FACING NORTHWEST

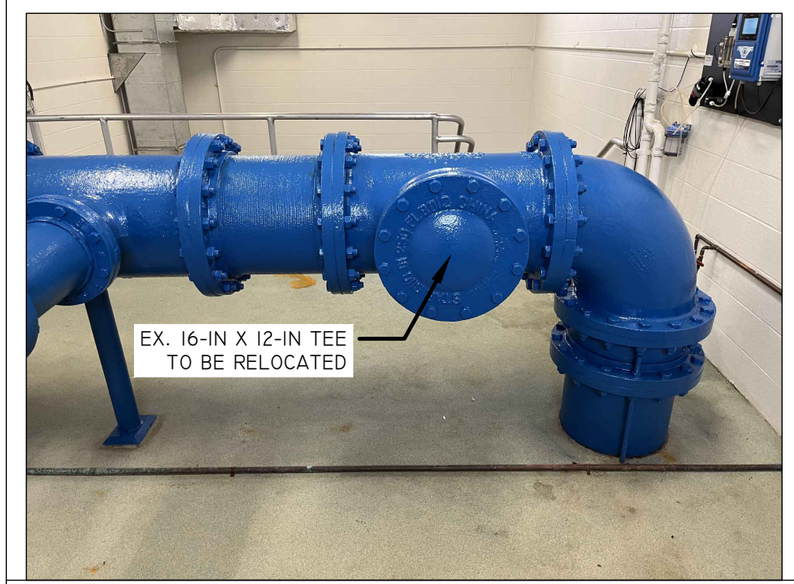

EXISTING RESERVOIR INLET PIPING
FACING SOUTHWEST

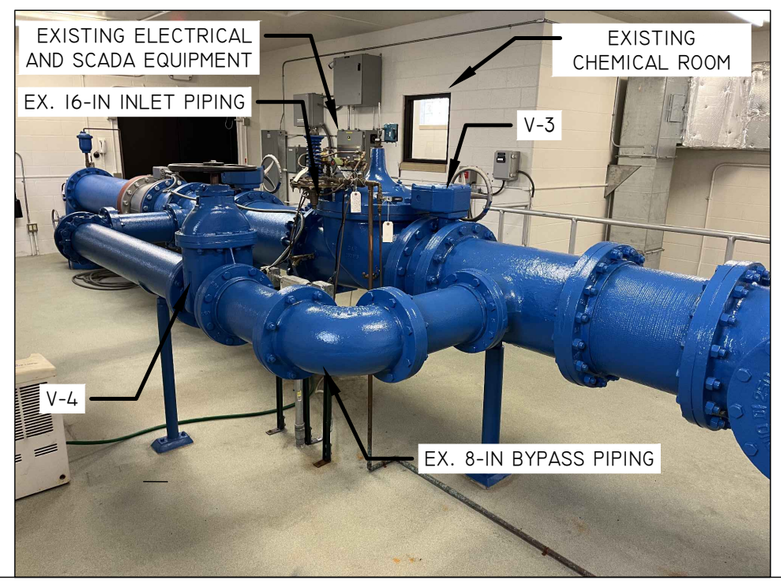

EXISTING RESERVOIR INLET PIPING
FACING SOUTH

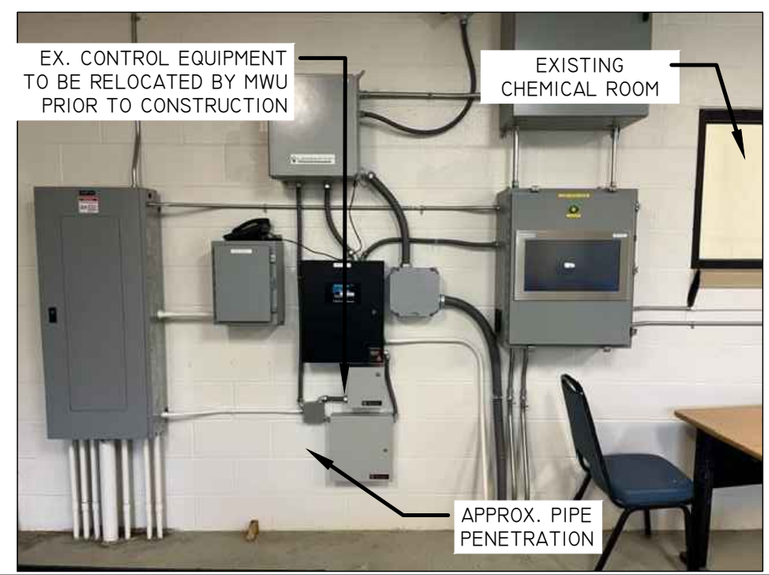

EXISTING CONTROL EQUIPMENT
FACING SOUTHWEST

PLOT SCALE: 1" = 40'
PLOT NAME:
REV. DATE:
ORIGINATOR: CITY_OF_MADISON_WATER_UTILITY

FILE NAME: F:\Wucommon\Facilities\Reservoir 229-Felland\Booster Pump 2023\Felland Booster\Reservoir 229 Booster.dwg
DATE: 9/19/2023 10:01 AM

MADISON WATER UTILITY FELLAND ROAD BOOSTER PUMP INSTALL 14413	SHEET NO. 11/12

DETAIL DRAWINGS

INSPECTOR: MWU	DRAWN BY: TDP
CHECKED BY: DVH	DATE: 9/12/2023

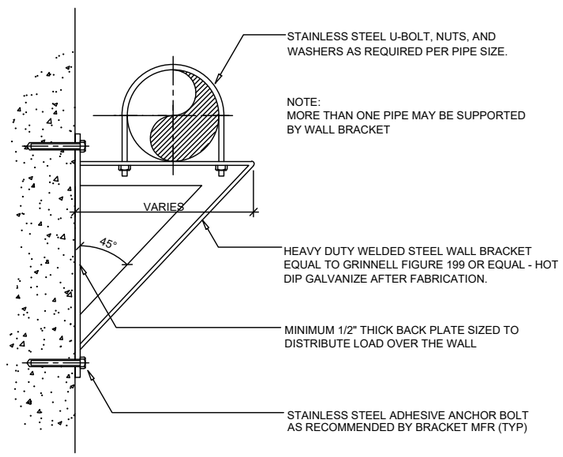

DETAIL 11/1: WALL BRACKET PIPE SUPPORT DETAIL

MANUFACTURED PIPE SUPPORT SYSTEM REQUIRED TO PREVENT LATERAL AND VERTICAL PIPE MOVEMENT (AS APPROPRIATE). SUBMIT SHOP DRAWINGS OF PIPE SUPPORT SYSTEMS TO MWU FOR REVIEW AND APPROVAL PRIOR TO INSTALLATION.

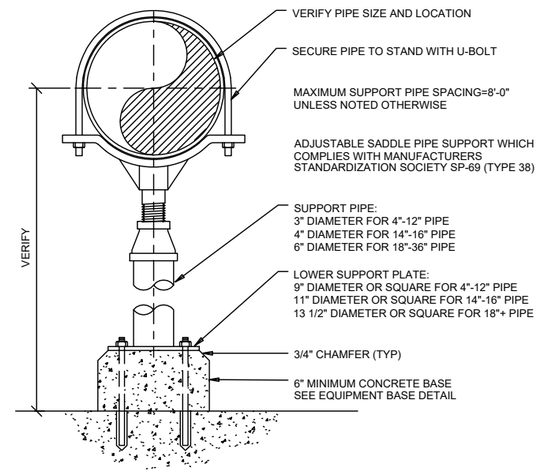

DETAIL 11/2: PIPE SUPPORT FROM FLOOR DETAIL

MANUFACTURED PIPE SUPPORT SYSTEM REQUIRED TO PREVENT LATERAL AND VERTICAL PIPE MOVEMENT (AS APPROPRIATE). SUBMIT SHOP DRAWINGS OF PIPE SUPPORT SYSTEMS TO MWU FOR REVIEW AND APPROVAL PRIOR TO INSTALLATION.

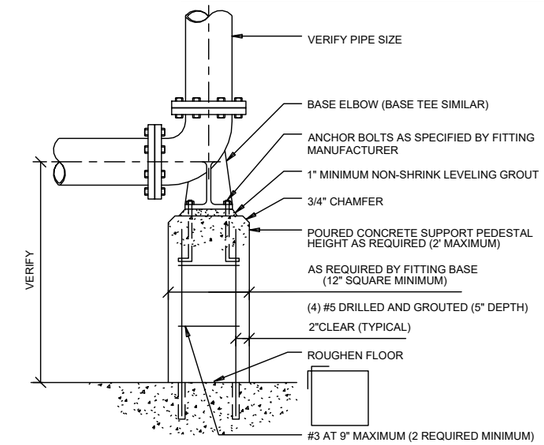

DETAIL 11/3: BASE BEND PEDESTAL DETAIL

MANUFACTURED BASE BEND WITH CONCRETE PEDESTAL TO PREVENT LATERAL AND VERTICAL PIPE MOVEMENT (AS APPROPRIATE)

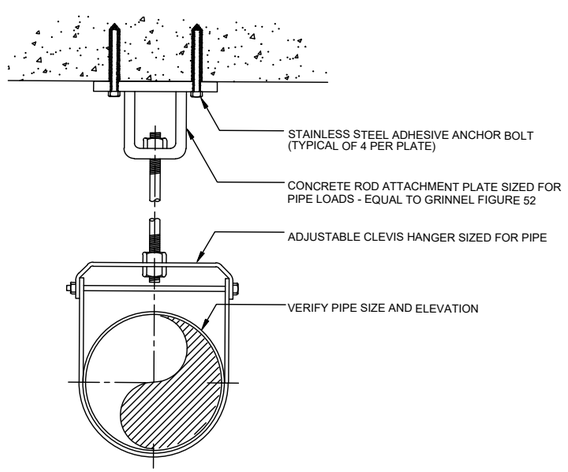

DETAIL 11/4: PIPE SUPPORT FROM CIELING DETAIL

MANUFACTURED PIPE SUPPORT SYSTEM REQUIRED TO PREVENT LATERAL AND VERTICAL PIPE MOVEMENT (AS APPROPRIATE). SUBMIT SHOP DRAWINGS OF PIPE SUPPORT SYSTEMS TO MWU FOR REVIEW AND APPROVAL PRIOR TO INSTALLATION.

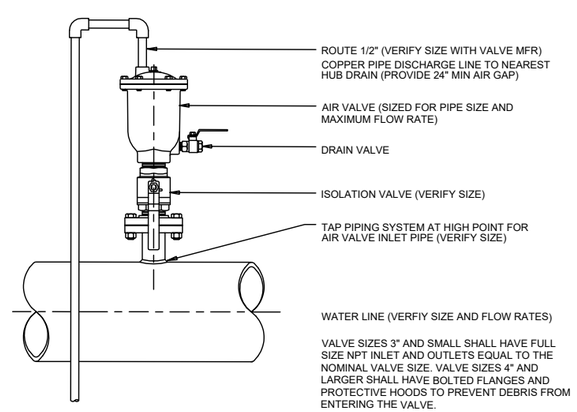

DETAIL 11/5: TYPICAL AIR RELEASE VALVE

INSTALL AIR RELEASE SYSTEM AT HIGH POINT AS SHOWN ON PLANS (SIZE AS APPROPRIATE). SUBMIT SPECS TO MWU FOR REVIEW AND APPROVAL PRIOR TO INSTALLATION.

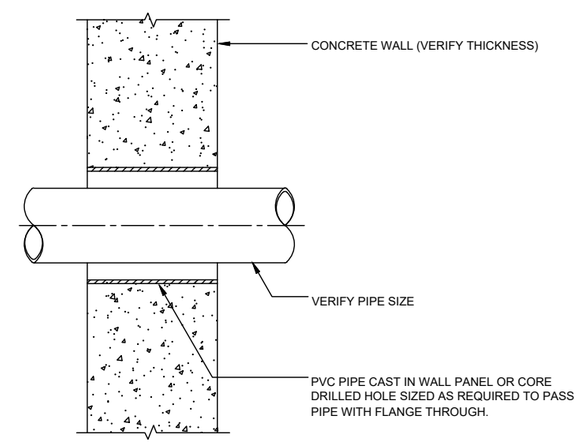

DETAIL 11/6: SEALED WALL SLEEVE DETAIL

CORE DRILL HOLE INTO EXISTING CONCRETE BLOCK WALL AS REQUIRED SUBMIT PLAN TO MWU FOR REVIEW AND APPROVAL PRIOR TO INSTALL

PLOT SCALE: 1" = 40'
PLOT NAME:
REV. DATE:
ORIGINATOR: CITY_OF_MADISON_WATER_UTILITY

FILE NAME: F:\Wucommon\Facilities\Reservoir 229-Felland\Booster Pump 2023\Felland Booster\Reservoir 229 Booster.dwg
DATE: 9/19/2023 10:01 AM

MADISON WATER UTILITY FELLAND ROAD BOOSTER PUMP INSTALL 14413	SHEET NO. 12/12

RES. 225 ALTITUDE VALVE

INSPECTOR: MWU	DRAWN BY: TDP
CHECKED BY: DVH	DATE: 9/12/2023

PLAN
3/16"=1'

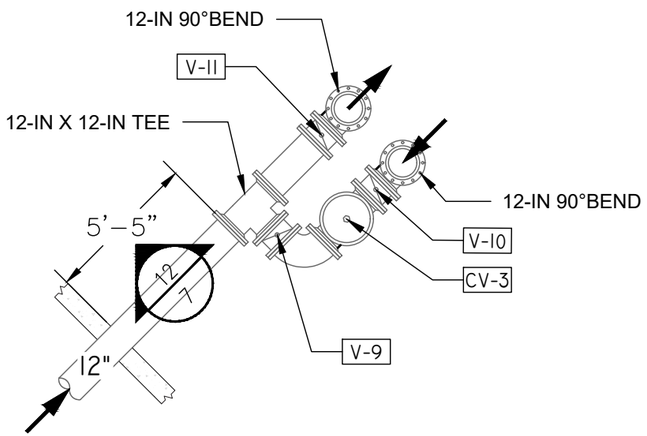

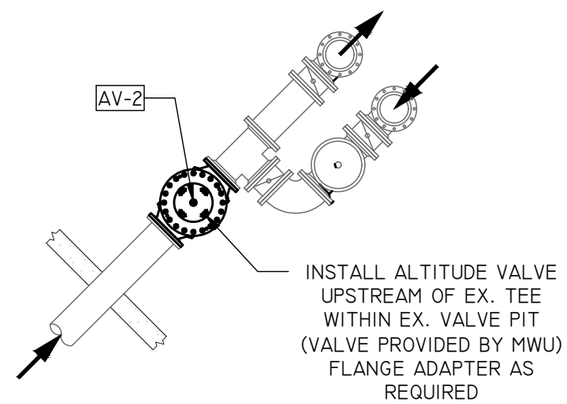

EXISTING INLET/OUTLET PIPING
FACING NORTHWEST

RESERVOIR 225 ALTITUDE VALE INSTALL
FACING NORTHWEST

SECTION
3/16"=1'

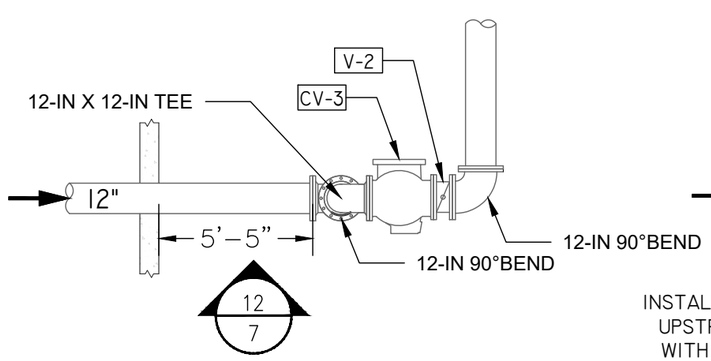

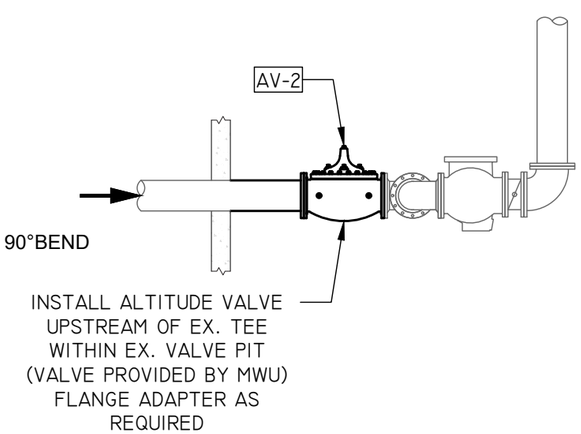

EXISTING INLET/OUTLET PIPING
FACING NORTHEAST

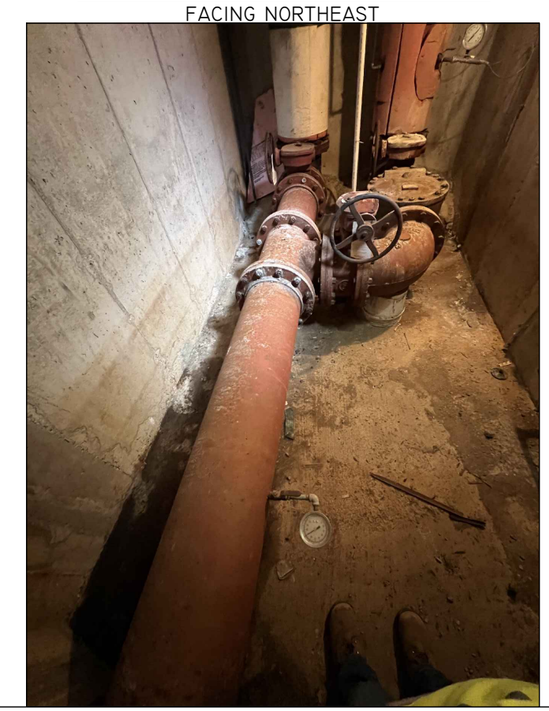

PLOT SCALE: 1" = 40'
PLOT NAME:
REV. DATE:
ORIGINATOR: CITY_OF_MADISON_WATER_UTILITY

FILE NAME: F:\Wucommon\Facilities\Reservoir 229-Felland\Booster Pump 2023\Felland Booster\Reservoir 229 Booster.dwg
DATE: 9/19/2023 10:01 AM