CITY OF MADISON

CITY ENGINEERING DIVISION
DEPARTMENT OF PUBLIC WORKS
PLAN OF PROPOSED IMPROVEMENT

Madison, Wisconsin

CONVENTIONAL SIGNS

COMBUSTIBLE FLUIDS — CAUTION

UNDERGROUND UTILITIES

NOTE: FIELD VERIFY UTILITIES

STORM SEWER	ST
SANITARY SEWER	SAN
WATER	W
POWER POLE	
RAILROAD	

CHEROKEE DRIVE UTILITIES WITH RESURFACING ASSESSMENT DISTRICT-2013

S. MIDVALE BLVD. TO NAKOMA RD.

PROJECT NO. 53W1553
CONTRACT NO. 7016

INDEX OF SHEETS

SHEET NO.	D1	TYPICAL SECTIONS
SHEET NO.	D2	SPEED TABLE
SHEET NO.	E1	ELECTRICAL PLAN
SHEET NO.	EC1-EC8	EROSION CONTROL PLAN
SHEET NO.	P1-P8	PLAN/PROFILE EASTBOUND
SHEET NO.	P9-P14	PLAN/PROFILE WESTBOUND
SHEET NO.	U1-U8	UTILITY PLAN/PROFILE
SHEET NO.	U9	STORM SEWER SCHEDULE
SHEET NO.	U10	REMOVALS STORM SCHEDULE
SHEET NO.	W1-W5	WATER PLAN/PROFILE
SHEET NO.	W6	WATER ESTIMATE OF MATERIALS
SHEET NO.	W7-W8	WATER IMPACT PLAN
SHEET NO.	X1-X4	CROSS-SECTIONS- E.B. CHEROKEE
SHEET NO.	X5-X9	CROSS-SECTIONS- W.B. CHEROKEE

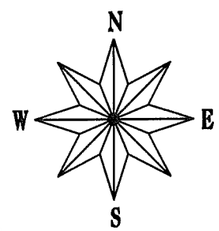

PROJECT LOCATION

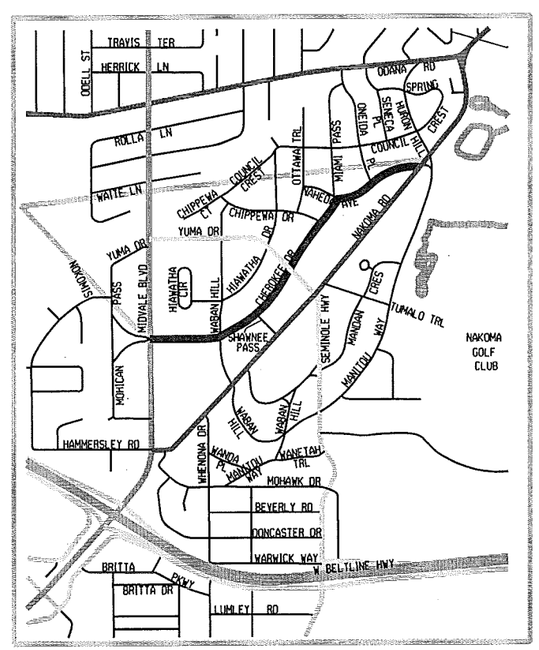

EARTHWORK SUMMARY

EXCAVATION CUT (PAID AS PLAN QUANTITY))	1933 CY
UNDERCUT (EST.)	1800 CY
TOTAL	3733 CY

NOTES:

THE CROSS SLOPE OF SIDEWALK AND BARRIER FREE WALK RAMPS SHALL NOT EXCEED 2%. THE LONGITUDINAL GRADE OF BARRIER FREE WALK RAMPS SHALL NOT EXCEED 8.33%.

STREET PROJECT APPROVED
FEB. 5, 2013
BY THE COMMON COUNCIL OF MADISON, WISCONSIN

DESIGN APPROVED BY:

Michael R Dailey 3/01/2013
For City Engineer Date

STREET DESIGNED BY:

WISCONSIN LEANNE K. HANNAH E-23728 MADISON WI PROFESSIONAL ENGINEER
2-28-13

STORM SEWER DESIGNED BY:

WISCONSIN GREGORY T. FRES E-32756 MADISON WI PROFESSIONAL ENGINEER

WATER DESIGNED BY:

WISCONSIN PETER E. HOLMGREN E-42155 MADISON WI PROFESSIONAL ENGINEER
2/27/2013

M:/DESIGN/STREETS/DGN/ 53W1553/PLAN/TITLE.DGN

WISDOT/CADDS SHEET 10

PROJECT NO. 53W1553	SHEET NO. D-1
TYPICAL SECTIONS	
CHEROKEE DR UTILITES W/RES. ASSM'T DIST-2013 CITY OF MADISON	

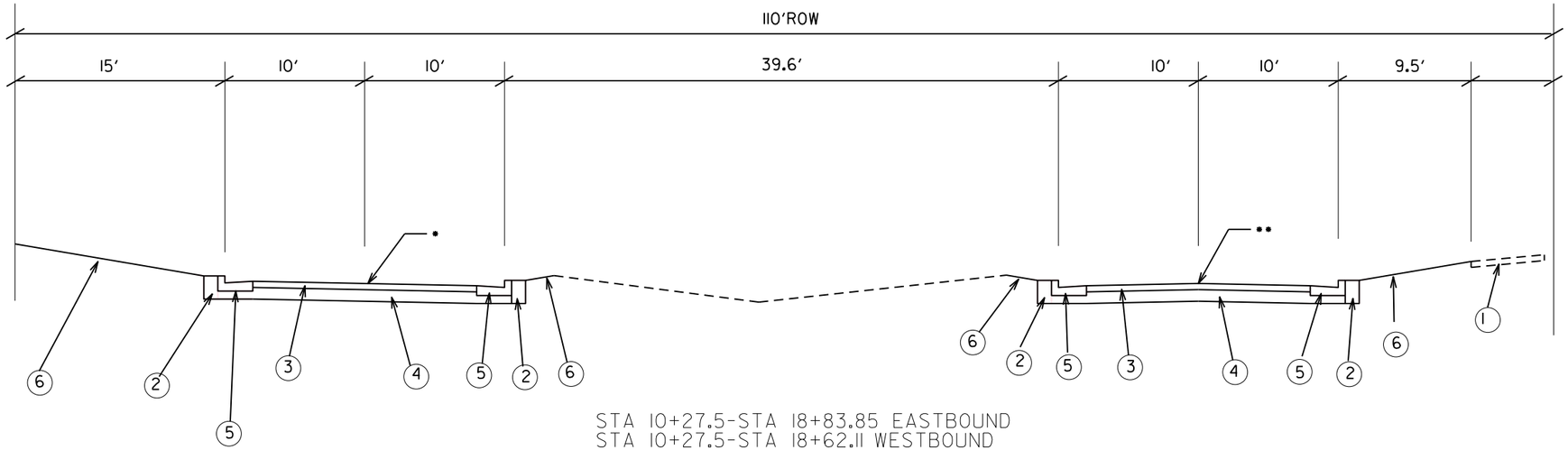

STA 10+27.5-STA 18+83.85 EASTBOUND
STA 10+27.5-STA 18+62.11 WESTBOUND

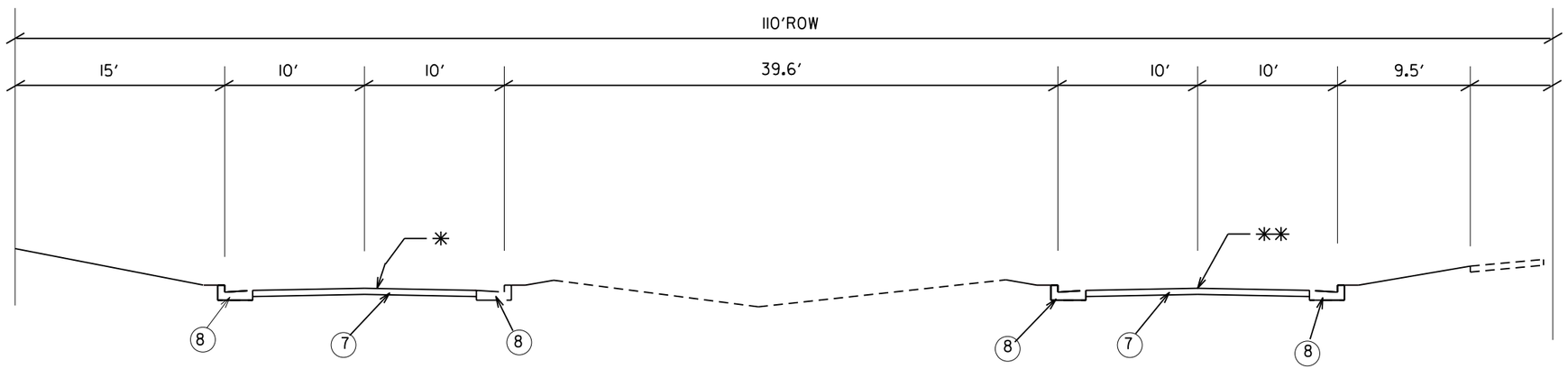

STA 18+83.85 - STA 36+25 EASTBOUND
STA 18+62.11 - STA 35+55.5 WESTBOUND

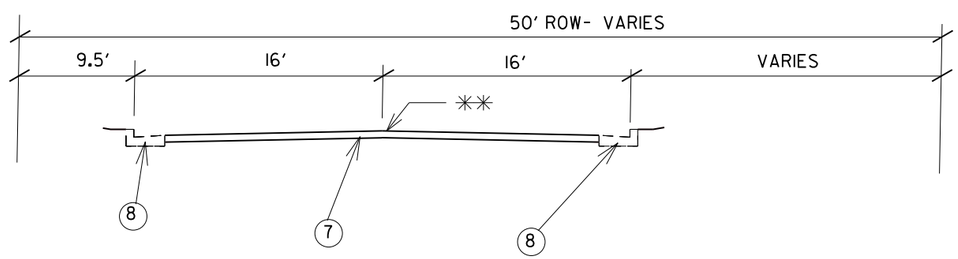

STA 36+25 - STA 50+00 EASTBOUND

* PT. REFERRED TO ON W.B. PROFILE

** PT. REFERRED TO ON E.B. PROFILE

1. EX. 5" CONC. SW
2. FILL
3. 5-1/4" HMA PAV'T TYPE E-1
4. 4" C.A.B.C.GR. 2
   6" C.A.B.C.GR. 1
5. TYPE A CONC. C&G
6. 4" TOPSOIL, SEED & MATTING
7. PULVERIZE, SHAPE, RESURFACE
   3" PAV'T TYPE E-1
8. EXISTING TYPE A CONC. C&G

LEVELS ON - 1,2,3,4,5,6,7,8,9,10,11,12,13,14,15,16,17,18,19,20,21,22,23,24,25,26,27,28,29,30,31,32,33,34,35,36,37,38,39,40,41,42,43,44,45,46,47,48,49,50,51,52,53,54,55,56,57,58,59,60,61,62,63

PROJECT NO. 53W1553	SHEET NO. D-2
SPEED TABLE DETAIL	
CHEROKEE DR UTILITES W/RES. ASSM'T DIST-2013 CITY OF MADISON	

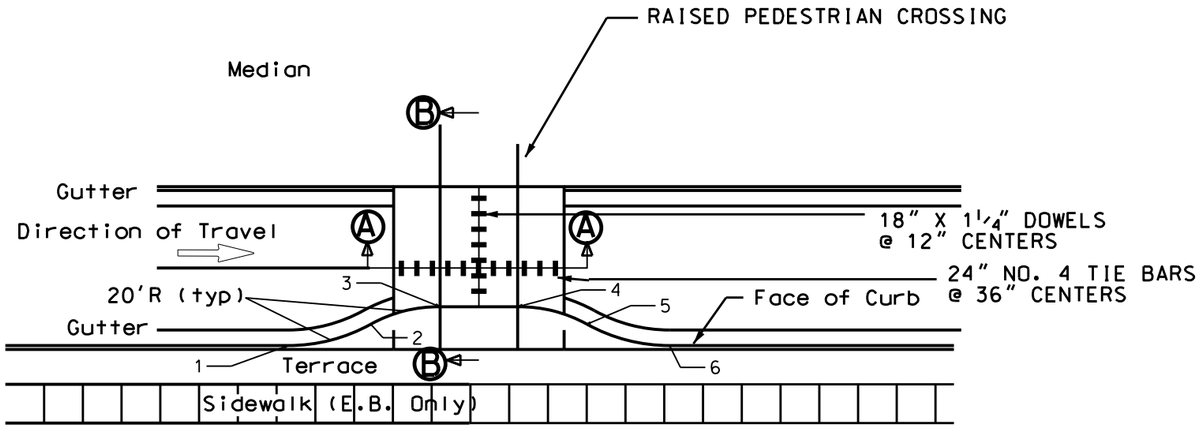

PLAN VIEW

TYPICAL URBAN STREET

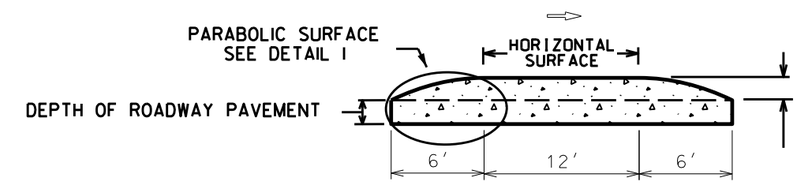

SECTION AA

NOT TO SCALE
(VERTICAL SCALE IS EXAGERATED)

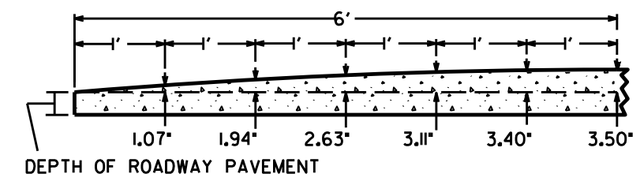

DETAIL 1

PARABOLIC SURFACE

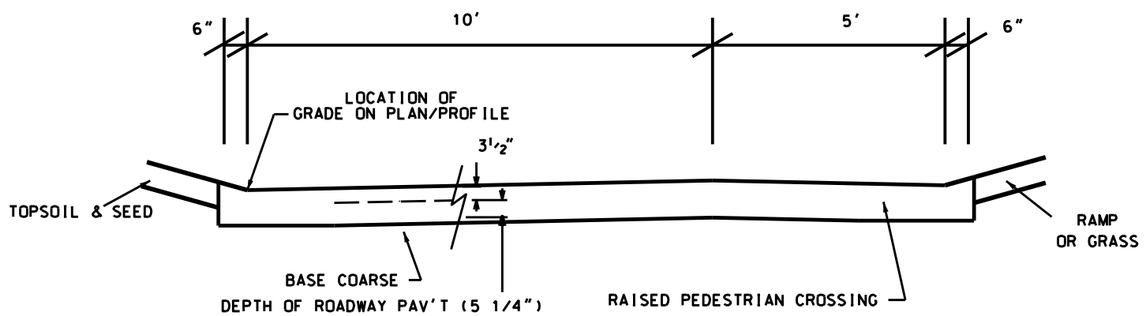

SECTION BB

NOT TO SCALE
(VERT. SCALE IS EXAGERATED)

BUMP OUT LAYOUT

PT. NO.	EASTBOUND	WESTBOUND
1	STA 14+29.10 RT 10.0	STA 14+73.99 LT 10.0
2	STA 14+38.78 RT 7.50	STA 14+64.30 LT 7.50
3	STA 14+48.46 RT 5.0	STA 14+54.62 LT 5.0
4	STA 14+60.46 RT 5.0	STA 14+42.62 LT 5.0
5	STA 14+70.14 RT 7.50	STA 14+32.94 LT 7.50
6	STA 14+79.83 RT 10.0	STA 14+23.26 LT 10.0

LEVELS ON - 1,2,3,4,5,6,7,8,9,10,11,12,13,14,15,16,17,18,19,20,21,22,23,24,25,26,27,28,29,30,31,32,33,34,35,36,37,38,39,40,41,42,43,44,45,46,47,48,49,50,51,52,53,54,55,56,57,58,59,60,61,62,63

PROJECT NO. 53W1553	SHEET NO. D-3

SIDEWALK GRADES

CHEROKEE DR UTILITES
W/RES. ASSM'T DIST-2013 CITY OF MADISON

6/17/13

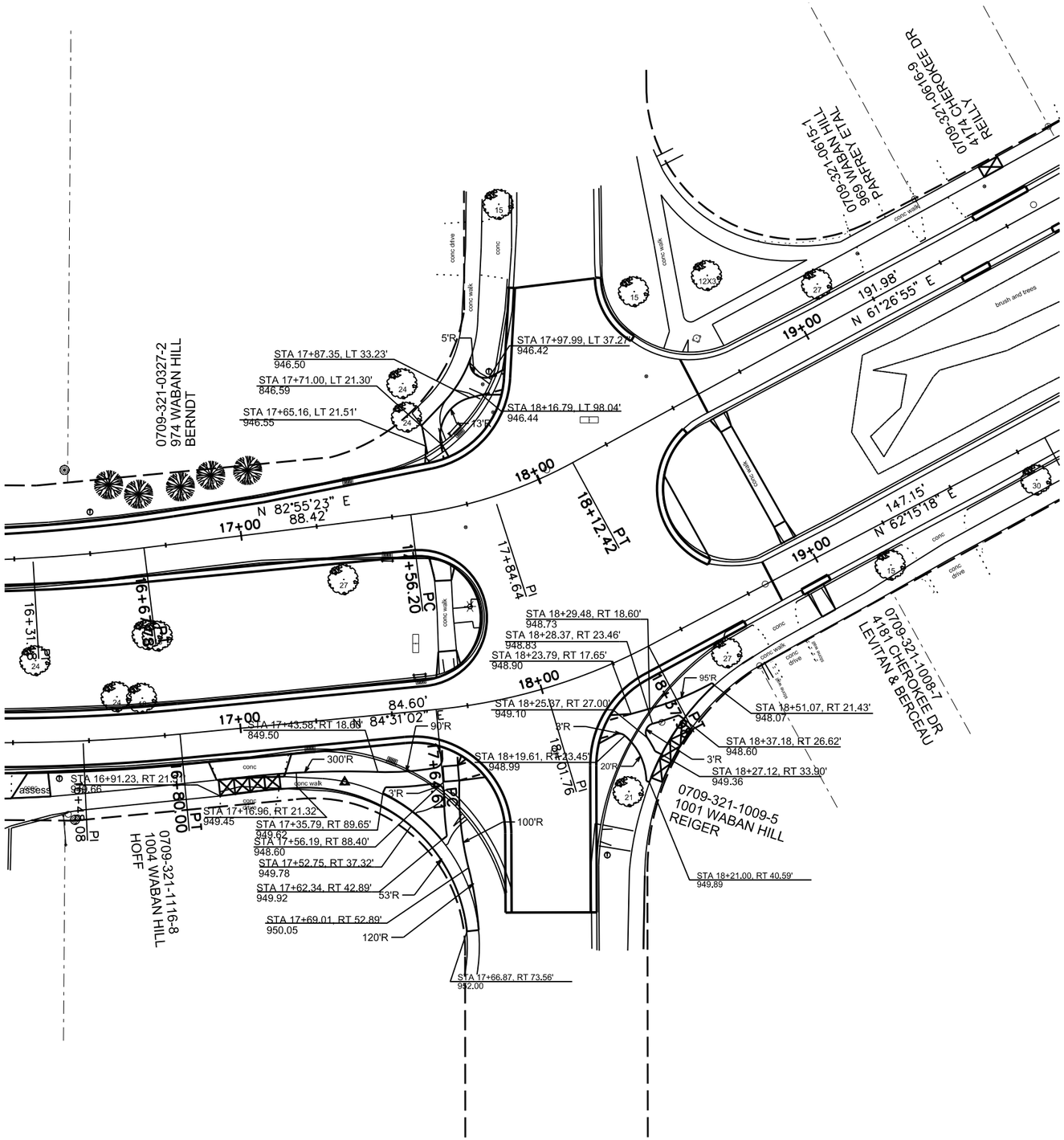

LEVELS ON - 1,2,3,4,5,6,7,8,9,10,11,12,13,14,15,16,17,18,19,20,21,22,23,24,25,26,27,28,29,30,31,32,33,34,35,36,37,38,39,40,41,42,43,44,45,46,47,48,49,50,51,52,53,54,55,56,57,58,59,60,61,62,63

F:\ENCOMMON\STREETS\DGN5W0551\PLAN\TYPICAL.DGN
MAR 2008

PROJECT NO. 53W0551

1. ALL LOCATIONS ARE APPROXIMATE. THE TRAFFIC ENGINEER SHALL APPROVE FINAL LOCATIONS, INCLUDING SETBACK, IN THE FIELD AFTER NEW CURB AND SIDEWALK HAS BEEN LOCATED. THE CONTRACTOR SHALL NOTIFY SCOTT LANGER (266-5987) CITY TRAFFIC ENGINEERING, AT LEAST 24-HOURS IN ADVANCE OF NEEDING CONDUIT OR HANDHOLE LOCATIONS MARKED.
2. THE CONTRACTOR SHALL DO ALL WORK IN ACCORDANCE WITH "CITY OF MADISON STANDARD SPECIFICATIONS FOR PUBLIC WORKS CONSTRUCTION, 2013 EDITION" AND ALL ADDENDUMS THERETO. ALL CONDUIT SHALL BE PVC, SCHEDULE 80 UNDER ROADWAY PAVEMENT AND DRIVEWAYS OR SCHEDULE 40 OTHERWISE. PULL WIRE REQUIRED AS PER STANDARD SPECIFICATIONS.
3. THE CONTRACTOR SHALL CALL MIKE CHRISTOPH (266-9031) AT THE TRAFFIC ENGINEERING SHOP AT LEAST 24-HOURS IN ADVANCE OF BURYING CONDUIT TO ARRANGE FOR INSPECTION. ANY WORK COMPLETED WITHOUT INSPECTION IS SUBJECT TO REJECTION.
4. TYPE 1 HANDHOLES ARE TO BE FURNISHED BY THE CONTRACTOR AND SHALL BE IN ACCORDANCE WITH THE DETAILS IN THE STANDARD SPECIFICATIONS.
5. PULL WIRE SHALL BE INSTALLED IN ALL CONDUITS PER THE STANDARD SPECIFICATIONS.

53W1553	SHEET NO. E-1
CHEROKEE DRIVE CONSTRUCTION ELECTRICAL PLAN	
CITY OF MADISON	

LEGEND
- - - - INSTALL PVC (SIZE NOTED)
ELECTRICAL HANDHOLE TYPE I

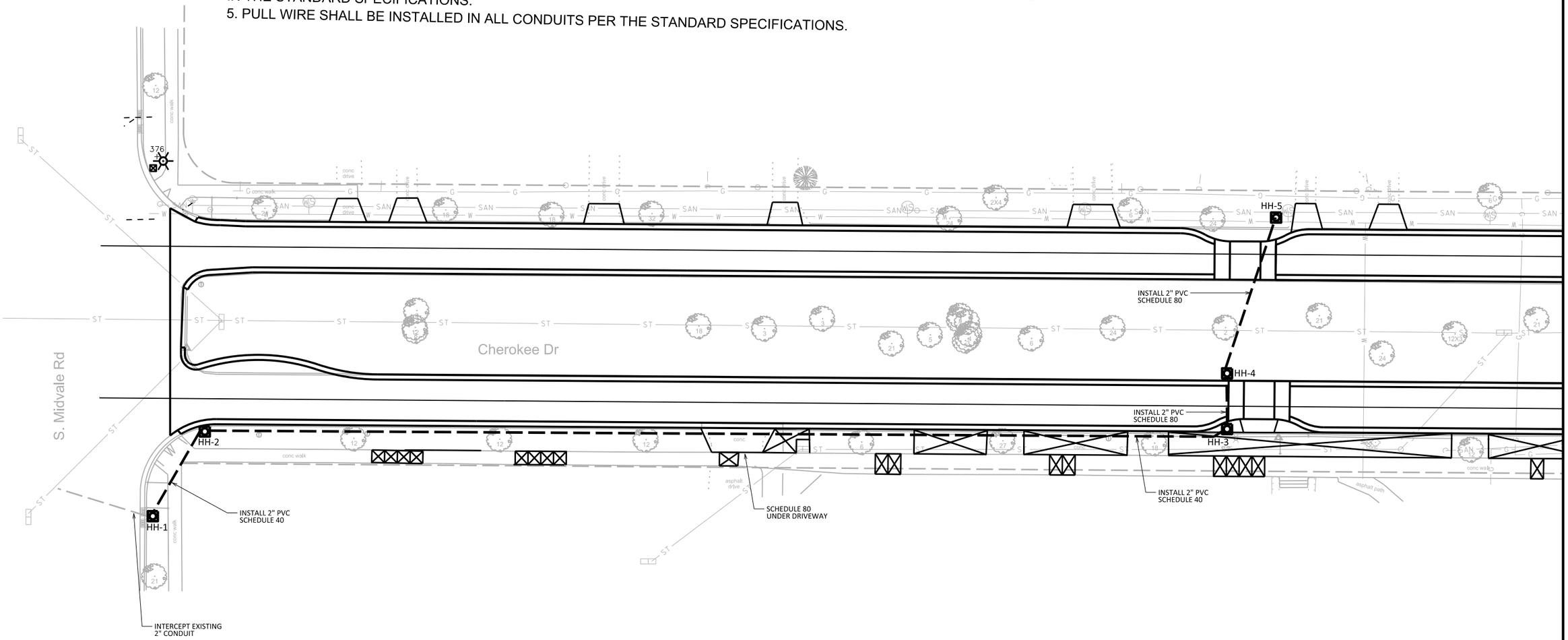

PLOT SCALE:
PLOT NAME:
REV. DATE:
ORIGINATOR: CITY OF MADISON, TRAFFIC ENG., DIV.

FILE NAME: M:\DESIGN\Projects\53W1553\Traffic\Design\53W1553-CherokeeTE-Electrical_2d.dgn DATE: 2/14/2013

CHEROKEE DR UTILITIES W/ RES.
PROJECT NO. 53W1553

SHEET NO.
EC-1

EROSION CONTROL
PLAN AND PROFILE

E.B. CHEROKEE DR

CITY OF MADISON

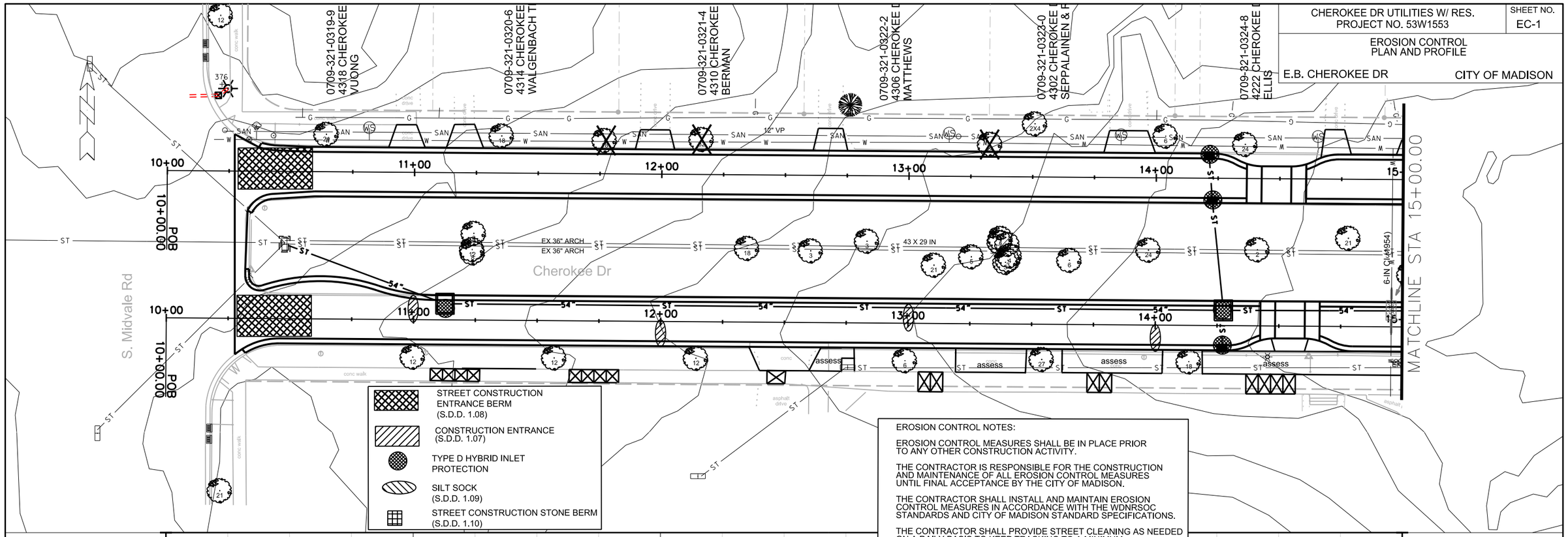

EROSION CONTROL NOTES:

EROSION CONTROL MEASURES SHALL BE IN PLACE PRIOR TO ANY OTHER CONSTRUCTION ACTIVITY.

THE CONTRACTOR IS RESPONSIBLE FOR THE CONSTRUCTION AND MAINTENANCE OF ALL EROSION CONTROL MEASURES UNTIL FINAL ACCEPTANCE BY THE CITY OF MADISON.

THE CONTRACTOR SHALL INSTALL AND MAINTAIN EROSION CONTROL MEASURES IN ACCORDANCE WITH THE WDNRSOC STANDARDS AND CITY OF MADISON STANDARD SPECIFICATIONS.

THE CONTRACTOR SHALL PROVIDE STREET CLEANING AS NEEDED ON A DAILY BASIS TO KEEP TRACKING TO A MINIMUM.

PROVISION OF AN EROSION CONTROL IMPLEMENTATION PLAN BY THE CONTRACTOR AT THE PRE-CON IS REQUIRED.

THE CONTRACTOR SHALL PROVIDE A CONSTRUCTION DEWATERING PLAN AS PART OF THE EROSION CONTROL IMPLEMENTATION PLAN.

POLYMER SHALL BE APPLIED TO DISTURBED AREAS AS DIRECTED BY THE CONSTRUCTION ENGINEER.

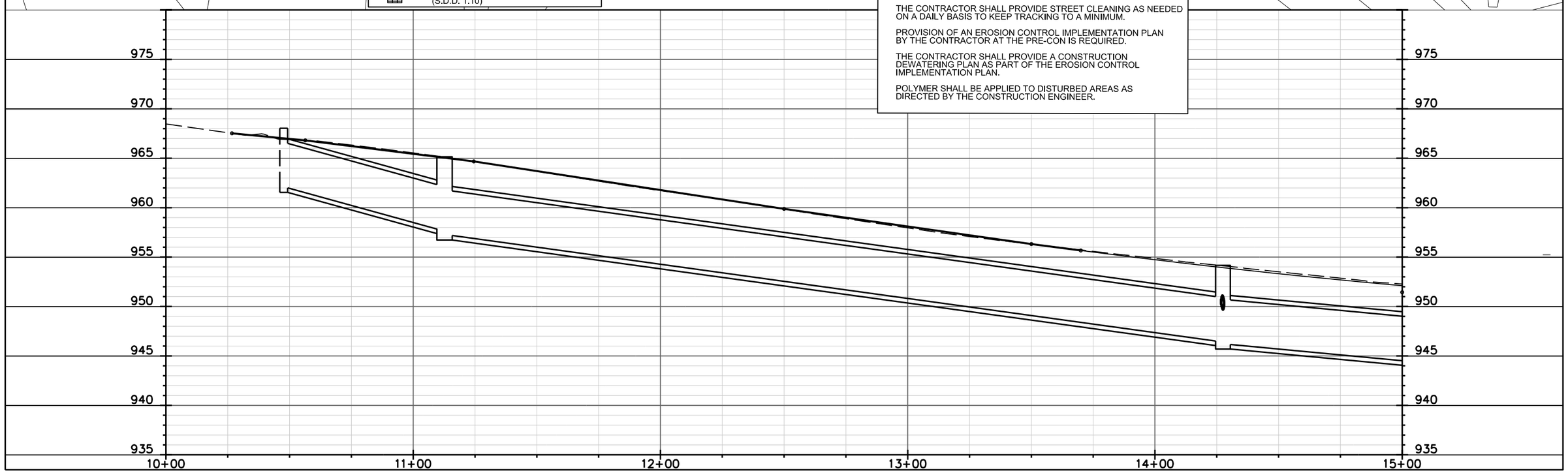

PLOT SCALE: ____
PLOT NAME: ____
REV. DATE: ____
ORIGINATOR: CITY OF MADISON, STREETS DIVISION

FILE NAME: M:\DESIGN\Projects\53W1553\Storm\Design\EC\53W1553-CherokeeSTM-PnPECCE1.dgn

DATE: 2/28/2013

CHEROKEE DR UTILITIES W/ RES.
PROJECT NO. 53W1553

SHEET NO.
EC-2

EROSION CONTROL
PLAN AND PROFILE

E.B. CHEROKEE DR

CITY OF MADISON

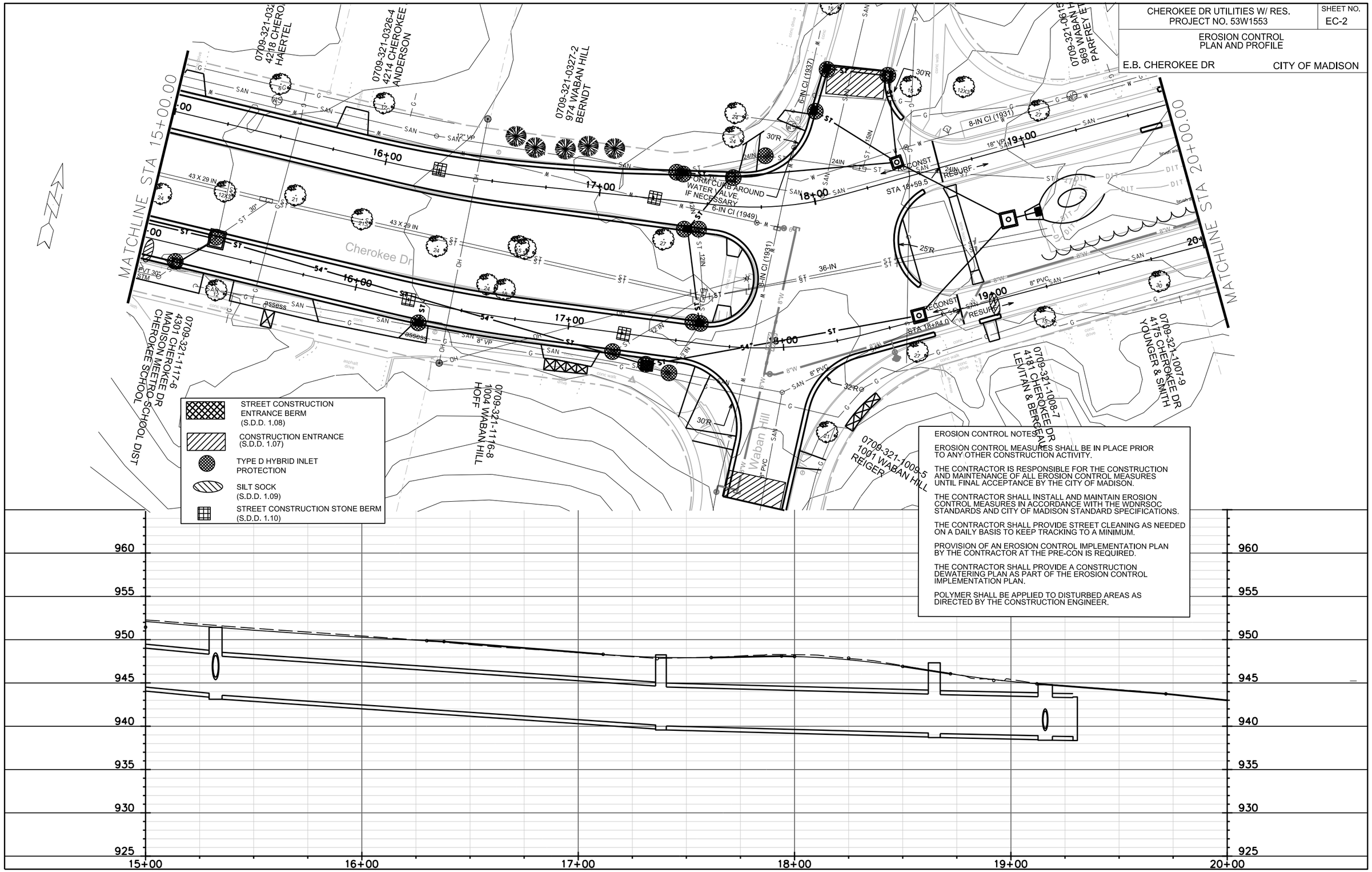

EROSION CONTROL NOTES:

EROSION CONTROL MEASURES SHALL BE IN PLACE PRIOR TO ANY OTHER CONSTRUCTION ACTIVITY.

THE CONTRACTOR IS RESPONSIBLE FOR THE CONSTRUCTION AND MAINTENANCE OF ALL EROSION CONTROL MEASURES UNTIL FINAL ACCEPTANCE BY THE CITY OF MADISON.

THE CONTRACTOR SHALL INSTALL AND MAINTAIN EROSION CONTROL MEASURES IN ACCORDANCE WITH THE WDNRSOC STANDARDS AND CITY OF MADISON STANDARD SPECIFICATIONS.

THE CONTRACTOR SHALL PROVIDE STREET CLEANING AS NEEDED ON A DAILY BASIS TO KEEP TRACKING TO A MINIMUM.

PROVISION OF AN EROSION CONTROL IMPLEMENTATION PLAN BY THE CONTRACTOR AT THE PRE-CON IS REQUIRED.

THE CONTRACTOR SHALL PROVIDE A CONSTRUCTION DEWATERING PLAN AS PART OF THE EROSION CONTROL IMPLEMENTATION PLAN.

POLYMER SHALL BE APPLIED TO DISTURBED AREAS AS DIRECTED BY THE CONSTRUCTION ENGINEER.

PLOT SCALE: ____
PLOT NAME: ____
REV. DATE: ____
ORIGINATOR: CITY OF MADISON, STREETS DIVISION

FILE NAME: M:\DESIGN\Projects\53W1553\Storm\Design\EC\53W1553-CherokeeSTM-PnPECCE2.dgn

DATE: 2/28/2013

CHEROKEE DR UTILITIES W/ RES.
PROJECT NO. 53W1553

SHEET NO.
EC-3

EROSION CONTROL
PLAN AND PROFILE

E.B. CHEROKEE DR

CITY OF MADISON

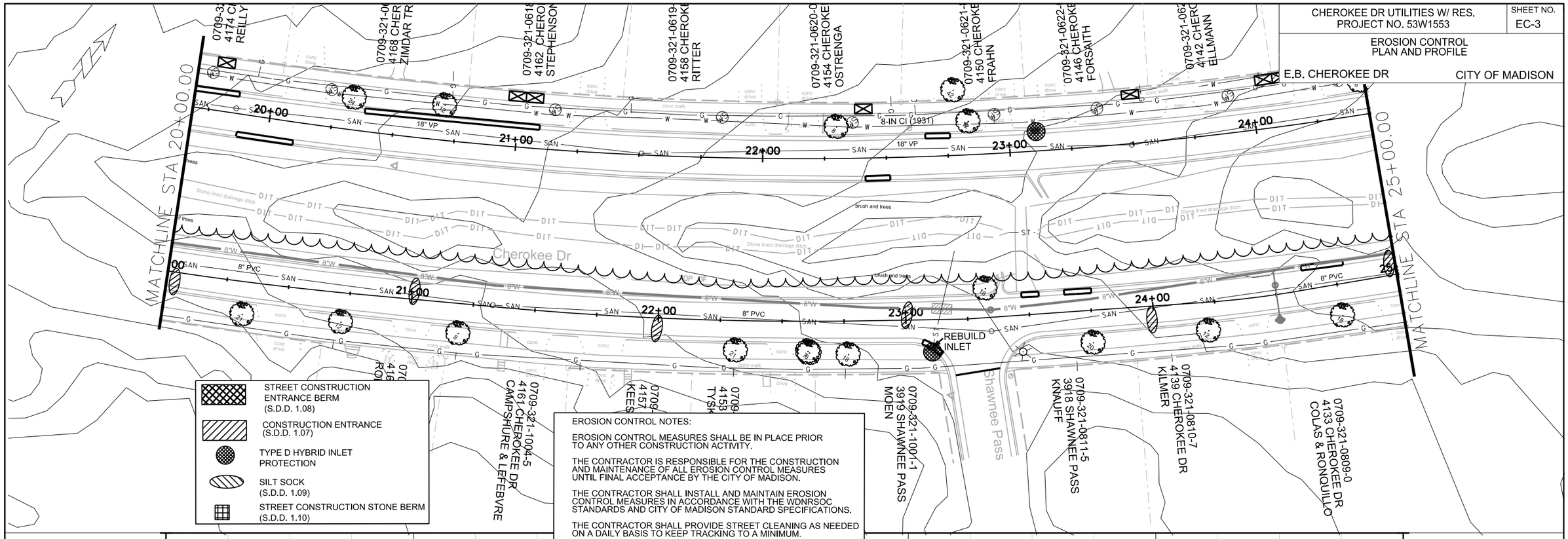

STREET CONSTRUCTION ENTRANCE BERM (S.D.D. 1.08)

CONSTRUCTION ENTRANCE (S.D.D. 1.07)

TYPE D HYBRID INLET PROTECTION

SILT SOCK (S.D.D. 1.09)

STREET CONSTRUCTION STONE BERM (S.D.D. 1.10)

EROSION CONTROL NOTES:

EROSION CONTROL MEASURES SHALL BE IN PLACE PRIOR TO ANY OTHER CONSTRUCTION ACTIVITY.

THE CONTRACTOR IS RESPONSIBLE FOR THE CONSTRUCTION AND MAINTENANCE OF ALL EROSION CONTROL MEASURES UNTIL FINAL ACCEPTANCE BY THE CITY OF MADISON.

THE CONTRACTOR SHALL INSTALL AND MAINTAIN EROSION CONTROL MEASURES IN ACCORDANCE WITH THE WDNRSOC STANDARDS AND CITY OF MADISON STANDARD SPECIFICATIONS.

THE CONTRACTOR SHALL PROVIDE STREET CLEANING AS NEEDED ON A DAILY BASIS TO KEEP TRACKING TO A MINIMUM.

PROVISION OF AN EROSION CONTROL IMPLEMENTATION PLAN BY THE CONTRACTOR AT THE PRE-CON IS REQUIRED.

THE CONTRACTOR SHALL PROVIDE A CONSTRUCTION DEWATERING PLAN AS PART OF THE EROSION CONTROL IMPLEMENTATION PLAN.

POLYMER SHALL BE APPLIED TO DISTURBED AREAS AS DIRECTED BY THE CONSTRUCTION ENGINEER.

PLOT SCALE: ____
PLOT NAME: ____
REV. DATE: ____
ORIGINATOR: CITY OF MADISON, STREETS DIVISION

FILE NAME: M:\DESIGN\Projects\53W1553\Storm\Design\EC\53W1553-CherokeeSTM-PnPECCE3.dgn

DATE: 2/28/2013

CHEROKEE DR UTILITIES W/ RES.
PROJECT NO. 53W1553

SHEET NO.
EC-4

EROSION CONTROL PLAN AND PROFILE

E.B. CHEROKEE DR

CITY OF MADISON

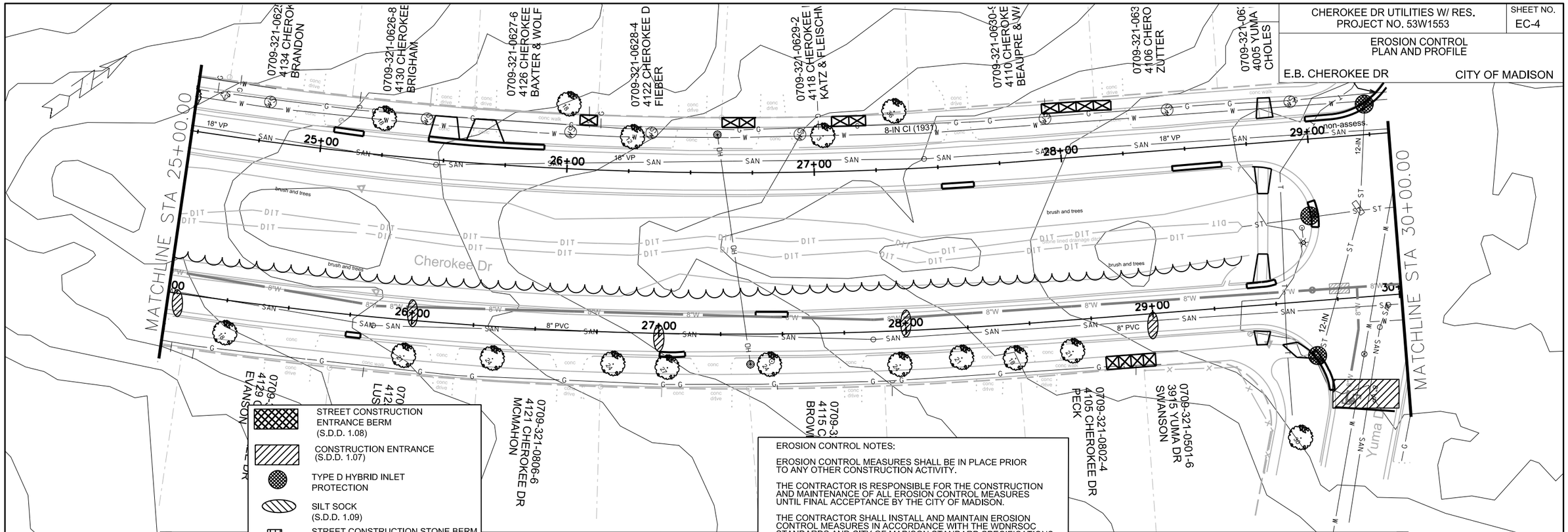

EROSION CONTROL NOTES:

EROSION CONTROL MEASURES SHALL BE IN PLACE PRIOR TO ANY OTHER CONSTRUCTION ACTIVITY.

THE CONTRACTOR IS RESPONSIBLE FOR THE CONSTRUCTION AND MAINTENANCE OF ALL EROSION CONTROL MEASURES UNTIL FINAL ACCEPTANCE BY THE CITY OF MADISON.

THE CONTRACTOR SHALL INSTALL AND MAINTAIN EROSION CONTROL MEASURES IN ACCORDANCE WITH THE WDNRSOC STANDARDS AND CITY OF MADISON STANDARD SPECIFICATIONS.

THE CONTRACTOR SHALL PROVIDE STREET CLEANING AS NEEDED ON A DAILY BASIS TO KEEP TRACKING TO A MINIMUM.

PROVISION OF AN EROSION CONTROL IMPLEMENTATION PLAN BY THE CONTRACTOR AT THE PRE-CON IS REQUIRED.

THE CONTRACTOR SHALL PROVIDE A CONSTRUCTION DEWATERING PLAN AS PART OF THE EROSION CONTROL IMPLEMENTATION PLAN.

POLYMER SHALL BE APPLIED TO DISTURBED AREAS AS DIRECTED BY THE CONSTRUCTION ENGINEER.

PLOT SCALE: ____

PLOT NAME: ____

REV. DATE: ____

ORIGINATOR: CITY OF MADISON, STREETS DIVISION

FILE NAME: M:\DESIGN\Projects\53W1553\Storm\Design\EC\53W1553-CherokeeSTM-PnPECCE4.dgn

DATE: 2/28/2013

CHEROKEE DR. UTILITIES W/ RES.
PROJECT NO. 53W1553

SHEET NO. EC-5

EROSION CONTROL
PLAN AND PROFILE

E.B. CHEROKEE DR

CITY OF MADISON

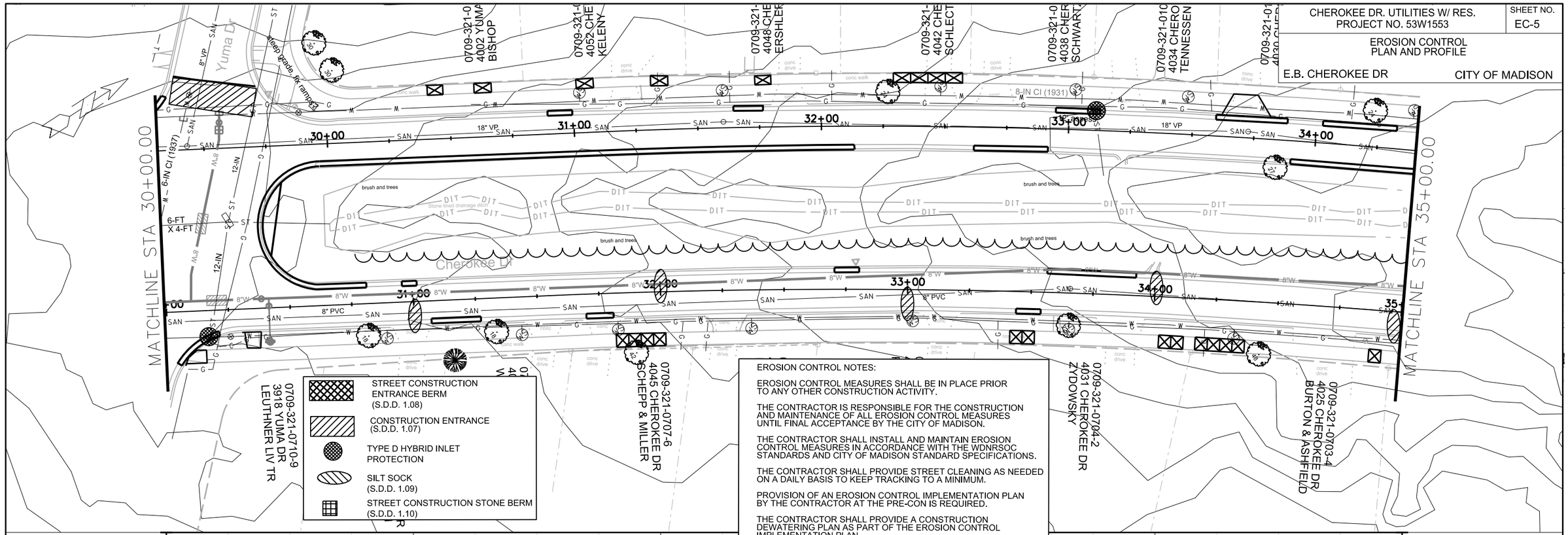

EROSION CONTROL NOTES:

EROSION CONTROL MEASURES SHALL BE IN PLACE PRIOR TO ANY OTHER CONSTRUCTION ACTIVITY.

THE CONTRACTOR IS RESPONSIBLE FOR THE CONSTRUCTION AND MAINTENANCE OF ALL EROSION CONTROL MEASURES UNTIL FINAL ACCEPTANCE BY THE CITY OF MADISON.

THE CONTRACTOR SHALL INSTALL AND MAINTAIN EROSION CONTROL MEASURES IN ACCORDANCE WITH THE WDNRSOC STANDARDS AND CITY OF MADISON STANDARD SPECIFICATIONS.

THE CONTRACTOR SHALL PROVIDE STREET CLEANING AS NEEDED ON A DAILY BASIS TO KEEP TRACKING TO A MINIMUM.

PROVISION OF AN EROSION CONTROL IMPLEMENTATION PLAN BY THE CONTRACTOR AT THE PRE-CON IS REQUIRED.

THE CONTRACTOR SHALL PROVIDE A CONSTRUCTION DEWATERING PLAN AS PART OF THE EROSION CONTROL IMPLEMENTATION PLAN.

POLYMER SHALL BE APPLIED TO DISTURBED AREAS AS DIRECTED BY THE CONSTRUCTION ENGINEER.

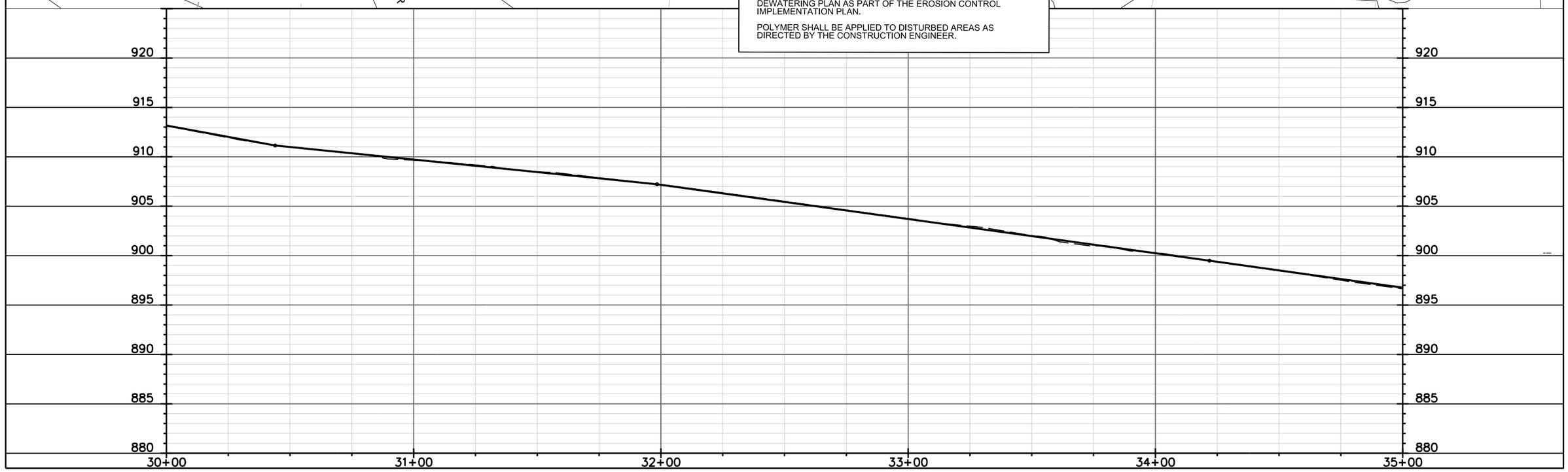

PLOT SCALE: ____
PLOT NAME: ____
REV. DATE: ____
ORIGINATOR: CITY OF MADISON, STREETS DIVISION

FILE NAME: M:\DESIGN\Projects\53W1553\Storm\Design\EC\53W1553-CherokeeSTM-PnPECCE5.dgn

DATE: 2/28/2013

CHEROKEE DR UTILITIES W/ RES.
PROJECT NO. 53W1553

SHEET NO.
EC-6

EROSION CONTROL
PLAN AND PROFILE

E.B. CHEROKEE DR

CITY OF MADISON

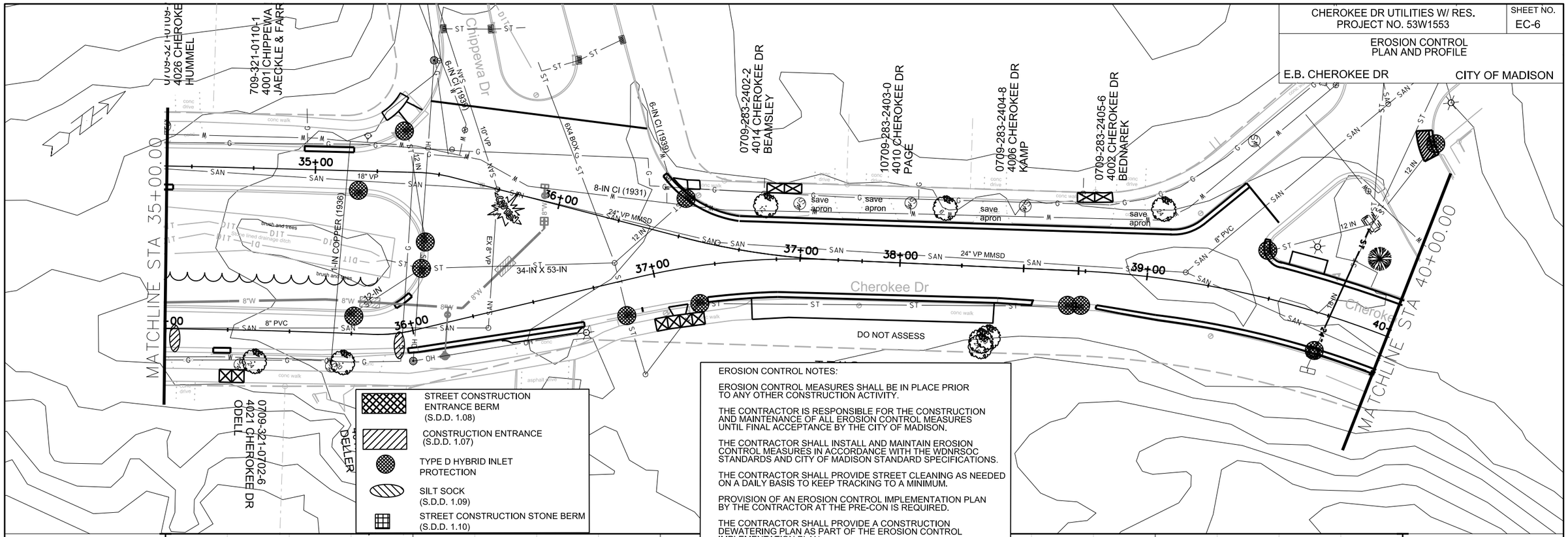

STREET CONSTRUCTION ENTRANCE BERM (S.D.D. 1.08)

CONSTRUCTION ENTRANCE (S.D.D. 1.07)

TYPE D HYBRID INLET PROTECTION

SILT SOCK (S.D.D. 1.09)

STREET CONSTRUCTION STONE BERM (S.D.D. 1.10)

EROSION CONTROL NOTES:

EROSION CONTROL MEASURES SHALL BE IN PLACE PRIOR TO ANY OTHER CONSTRUCTION ACTIVITY.

THE CONTRACTOR IS RESPONSIBLE FOR THE CONSTRUCTION AND MAINTENANCE OF ALL EROSION CONTROL MEASURES UNTIL FINAL ACCEPTANCE BY THE CITY OF MADISON.

THE CONTRACTOR SHALL INSTALL AND MAINTAIN EROSION CONTROL MEASURES IN ACCORDANCE WITH THE WDNRSOC STANDARDS AND CITY OF MADISON STANDARD SPECIFICATIONS.

THE CONTRACTOR SHALL PROVIDE STREET CLEANING AS NEEDED ON A DAILY BASIS TO KEEP TRACKING TO A MINIMUM.

PROVISION OF AN EROSION CONTROL IMPLEMENTATION PLAN BY THE CONTRACTOR AT THE PRE-CON IS REQUIRED.

THE CONTRACTOR SHALL PROVIDE A CONSTRUCTION DEWATERING PLAN AS PART OF THE EROSION CONTROL IMPLEMENTATION PLAN.

POLYMER SHALL BE APPLIED TO DISTURBED AREAS AS DIRECTED BY THE CONSTRUCTION ENGINEER.

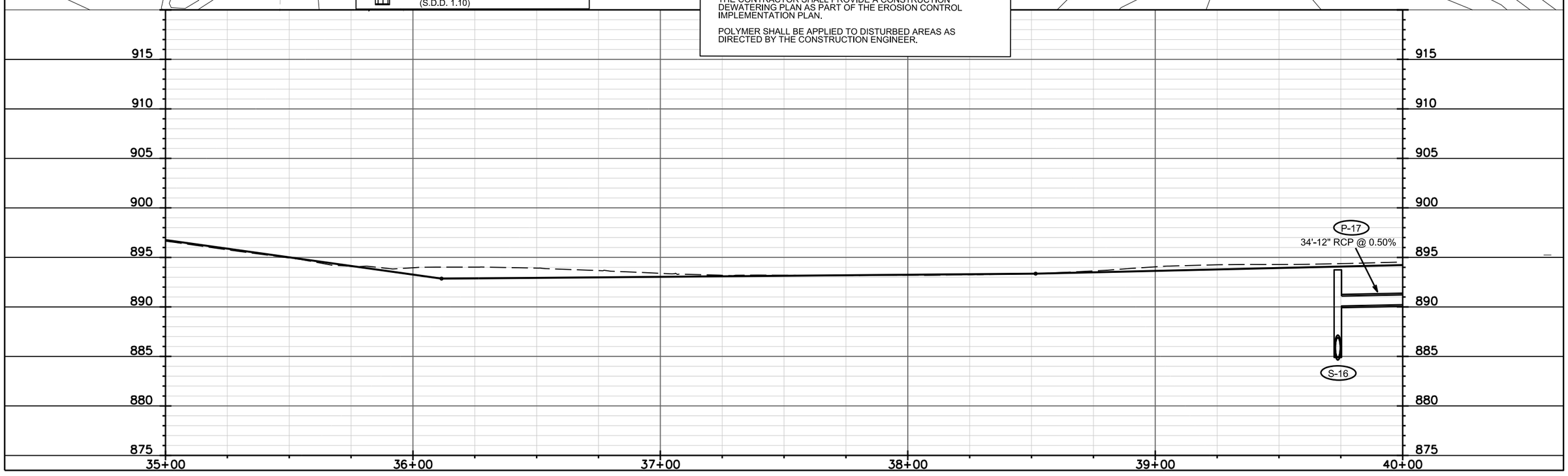

PLOT SCALE: ____
PLOT NAME: ____
REV. DATE: ____
ORIGINATOR: CITY OF MADISON, STREETS DIVISION

FILE NAME: M:\DESIGN\Projects\53W1553\Storm\Design\EC\53W1553-CherokeeSTM-PnPECCE6.dgn

DATE: 3/1/2013

CHEROKEE DR UTILITIES W/ RES. PROJECT NO. 53W1553	SHEET NO. EC-7
EROSION CONTROL PLAN AND PROFILE	
E.B. CHEROKEE DR	CITY OF MADISON

EROSION CONTROL NOTES:

EROSION CONTROL MEASURES SHALL BE IN PLACE PRIOR TO ANY OTHER CONSTRUCTION ACTIVITY.

THE CONTRACTOR IS RESPONSIBLE FOR THE CONSTRUCTION AND MAINTENANCE OF ALL EROSION CONTROL MEASURES UNTIL FINAL ACCEPTANCE BY THE CITY OF MADISON.

THE CONTRACTOR SHALL INSTALL AND MAINTAIN EROSION CONTROL MEASURES IN ACCORDANCE WITH THE WDNRSOC STANDARDS AND CITY OF MADISON STANDARD SPECIFICATIONS.

THE CONTRACTOR SHALL PROVIDE STREET CLEANING AS NEEDED ON A DAILY BASIS TO KEEP TRACKING TO A MINIMUM.

PROVISION OF AN EROSION CONTROL IMPLEMENTATION PLAN BY THE CONTRACTOR AT THE PRE-CON IS REQUIRED.

THE CONTRACTOR SHALL PROVIDE A CONSTRUCTION DEWATERING PLAN AS PART OF THE EROSION CONTROL IMPLEMENTATION PLAN.

POLYMER SHALL BE APPLIED TO DISTURBED AREAS AS DIRECTED BY THE CONSTRUCTION ENGINEER.

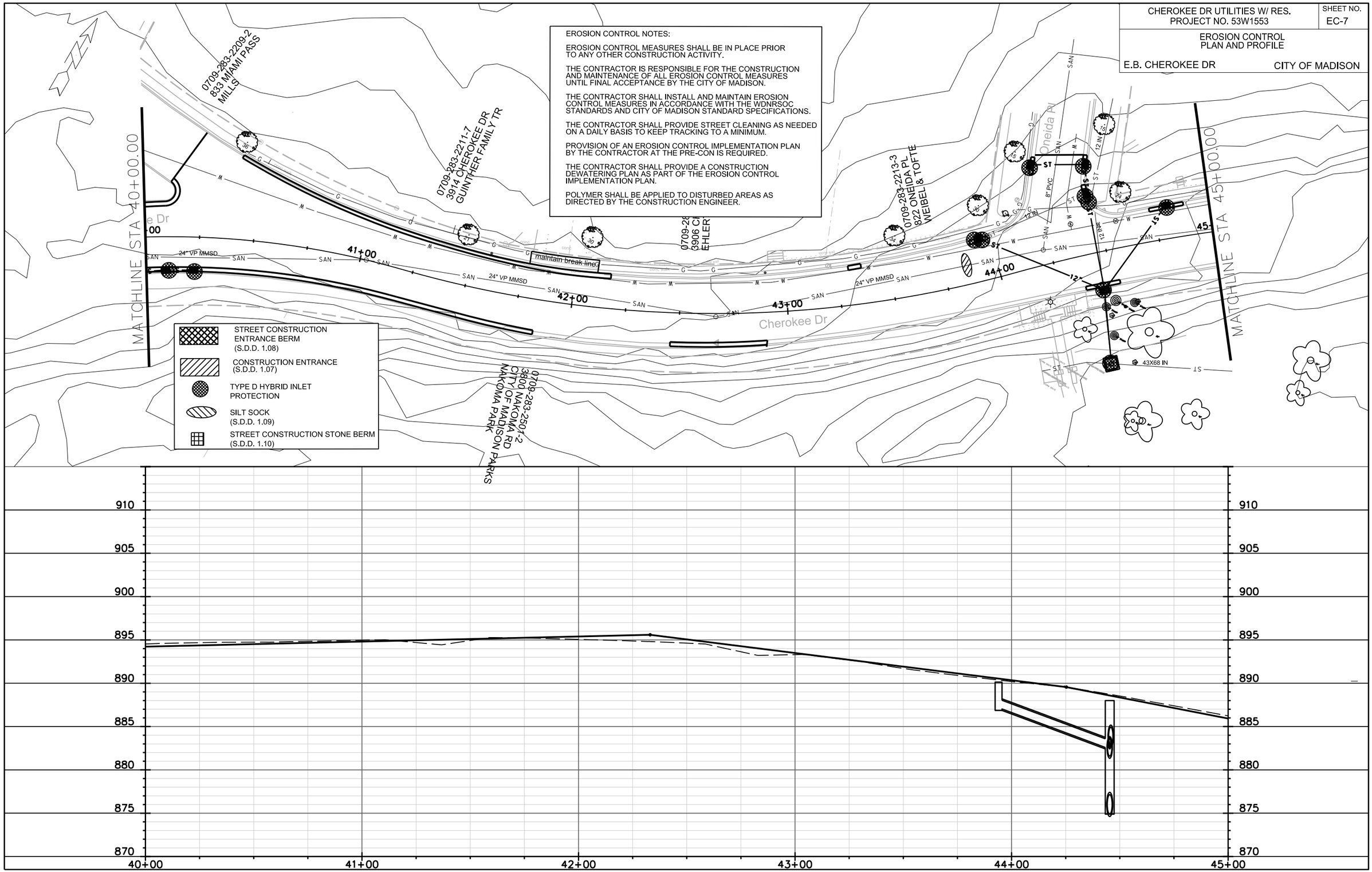

PLOT SCALE: ____

PLOT NAME: ____

REV. DATE: ____

ORIGINATOR: CITY OF MADISON, STREETS DIVISION

FILE NAME: M:\DESIGN\Projects\53W1553\Storm\Design\EC\53W1553-CherokeeSTM-PnPECCE7.dgn

DATE: 2/28/2013

CHEROKEE DR UTILITIES W/ RES. PROJECT NO. 53W1553	SHEET NO. EC-8
EROSION CONTROL PLAN AND PROFILE	
E.B. CHEROKEE DR	CITY OF MADISON

EROSION CONTROL NOTES:

EROSION CONTROL MEASURES SHALL BE IN PLACE PRIOR TO ANY OTHER CONSTRUCTION ACTIVITY.

THE CONTRACTOR IS RESPONSIBLE FOR THE CONSTRUCTION AND MAINTENANCE OF ALL EROSION CONTROL MEASURES UNTIL FINAL ACCEPTANCE BY THE CITY OF MADISON.

THE CONTRACTOR SHALL INSTALL AND MAINTAIN EROSION CONTROL MEASURES IN ACCORDANCE WITH THE WDNRSOC STANDARDS AND CITY OF MADISON STANDARD SPECIFICATIONS.

THE CONTRACTOR SHALL PROVIDE STREET CLEANING AS NEEDED ON A DAILY BASIS TO KEEP TRACKING TO A MINIMUM.

PROVISION OF AN EROSION CONTROL IMPLEMENTATION PLAN BY THE CONTRACTOR AT THE PRE-CON IS REQUIRED.

THE CONTRACTOR SHALL PROVIDE A CONSTRUCTION DEWATERING PLAN AS PART OF THE EROSION CONTROL IMPLEMENTATION PLAN.

POLYMER SHALL BE APPLIED TO DISTURBED AREAS AS DIRECTED BY THE CONSTRUCTION ENGINEER.

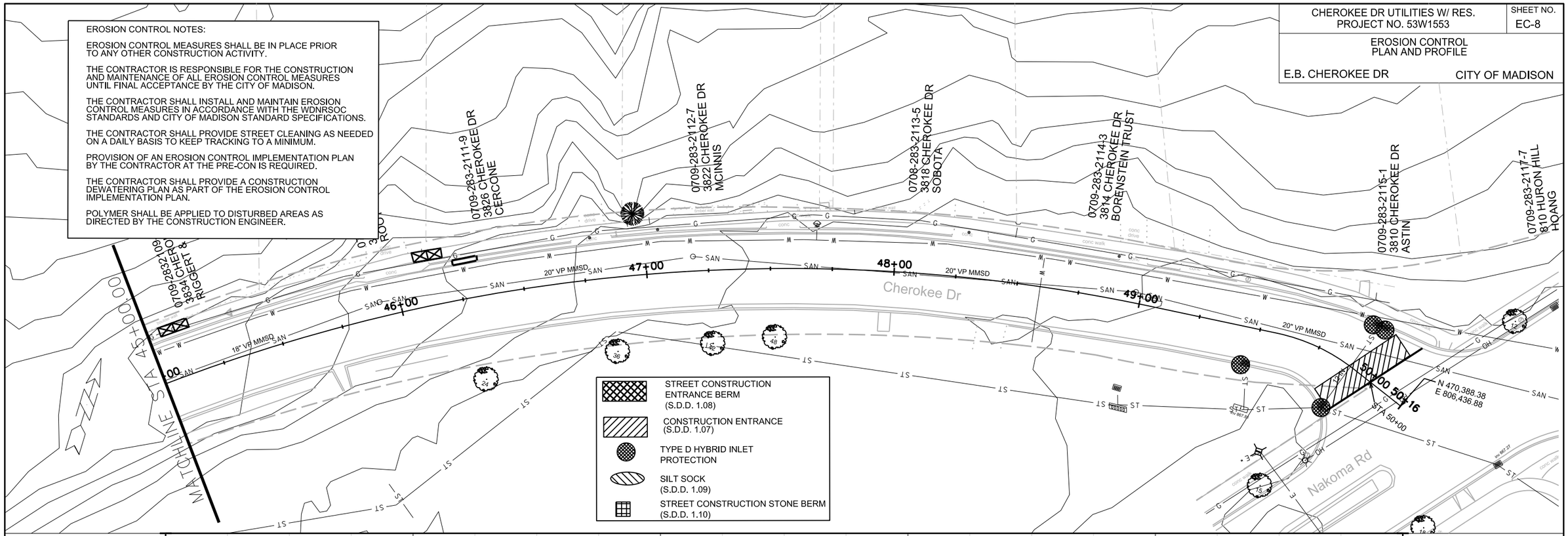

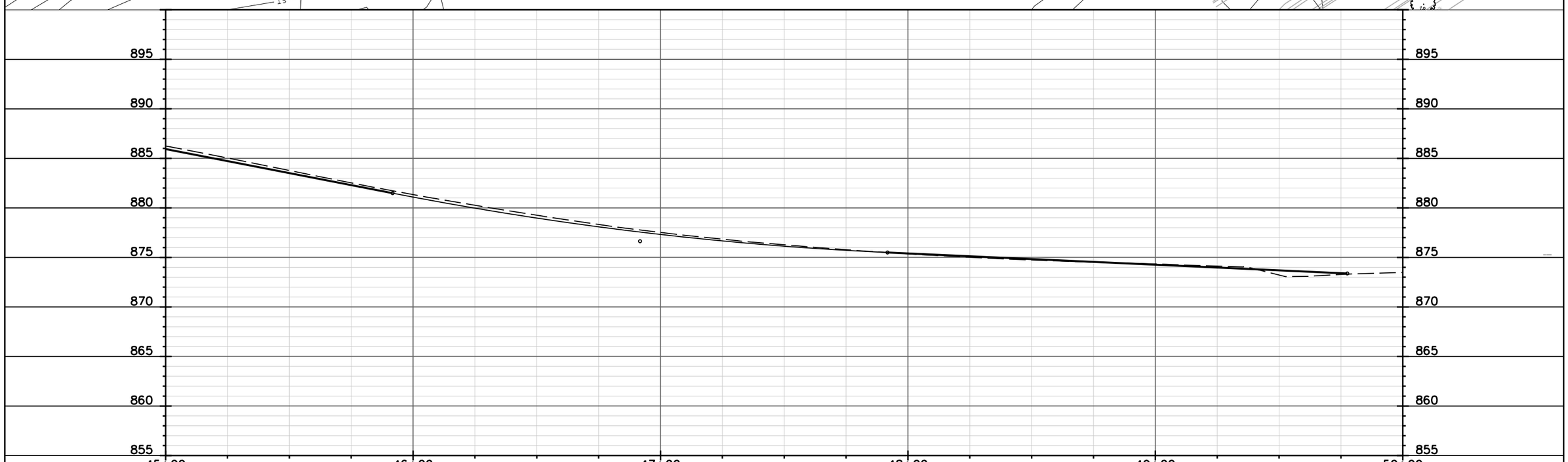

PLOT SCALE: ____

PLOT NAME: ____

REV. DATE: ____

ORIGINATOR: CITY OF MADISON, STREETS DIVISION

FILE NAME: M:\DESIGN\Projects\53W1553\Storm\Design\EC\53W1553-CherokeeSTM-PnPCECE8.dgn

DATE: 2/28/2013

CHEROKEE DR UTILITES W/RES.
PROJECT NO. 53W1553

SHEET NO. P-1

PLAN AND PROFILE

E.B. CHEROKEE

CITY OF MADISON

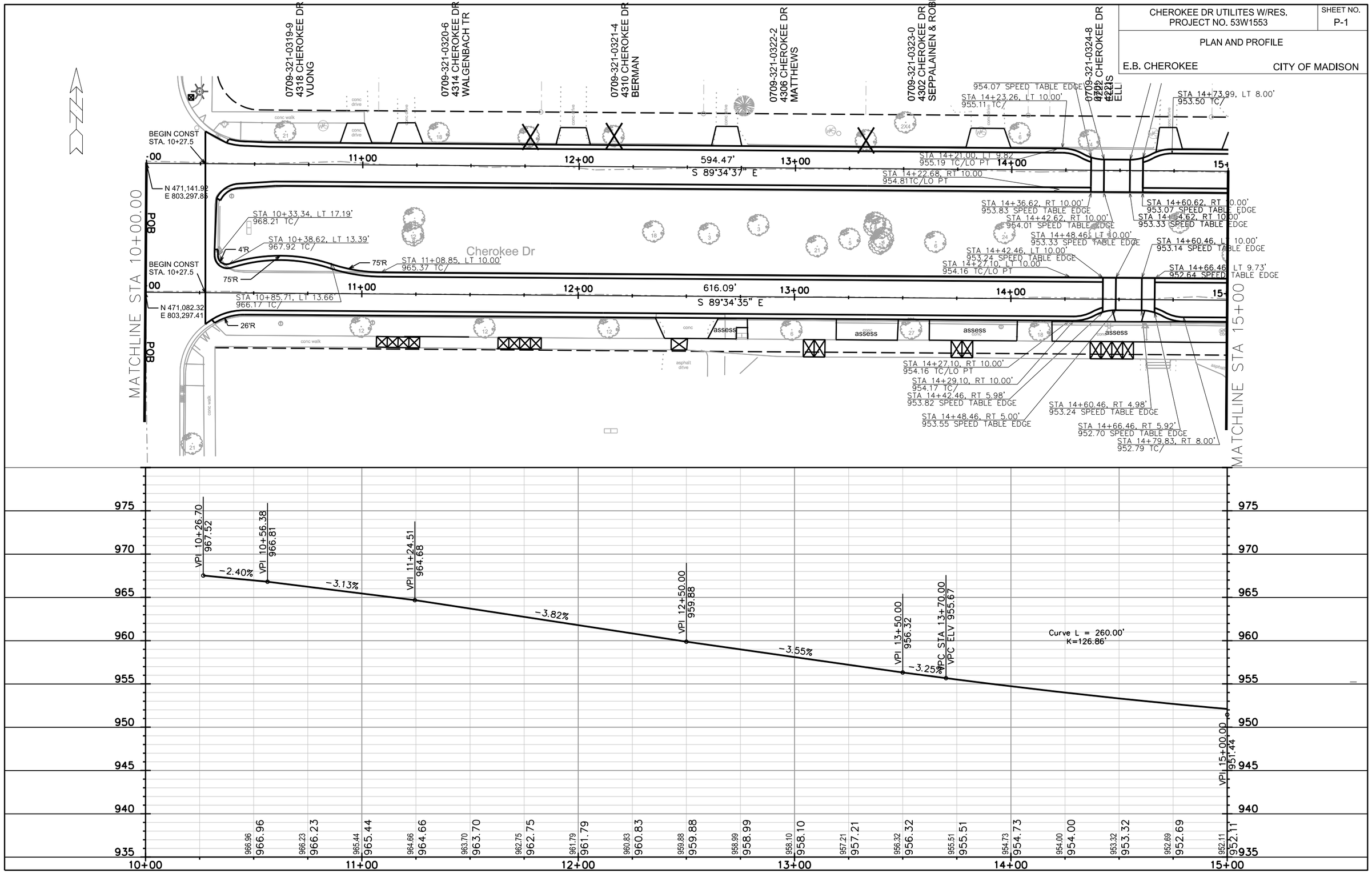

PLOT SCALE: ____

PLOT NAME: ____

REV. DATE: ____

ORIGINATOR: CITY OF MADISON_STREETS DIVISION

FILE NAME: M:\DESIGN\Projects\53W1553\Streets\Design\53W1553-CherokeeEN-PnP 1.dgn

DATE: 2/28/2013

CHEROKEE DR UTILITIES W/RES. PROJECT NO. 53W1553	SHEET NO. P-2
PLAN AND PROFILE	
E.B. CHEROKEE	CITY OF MADISON

REV 6/17/13 LKH

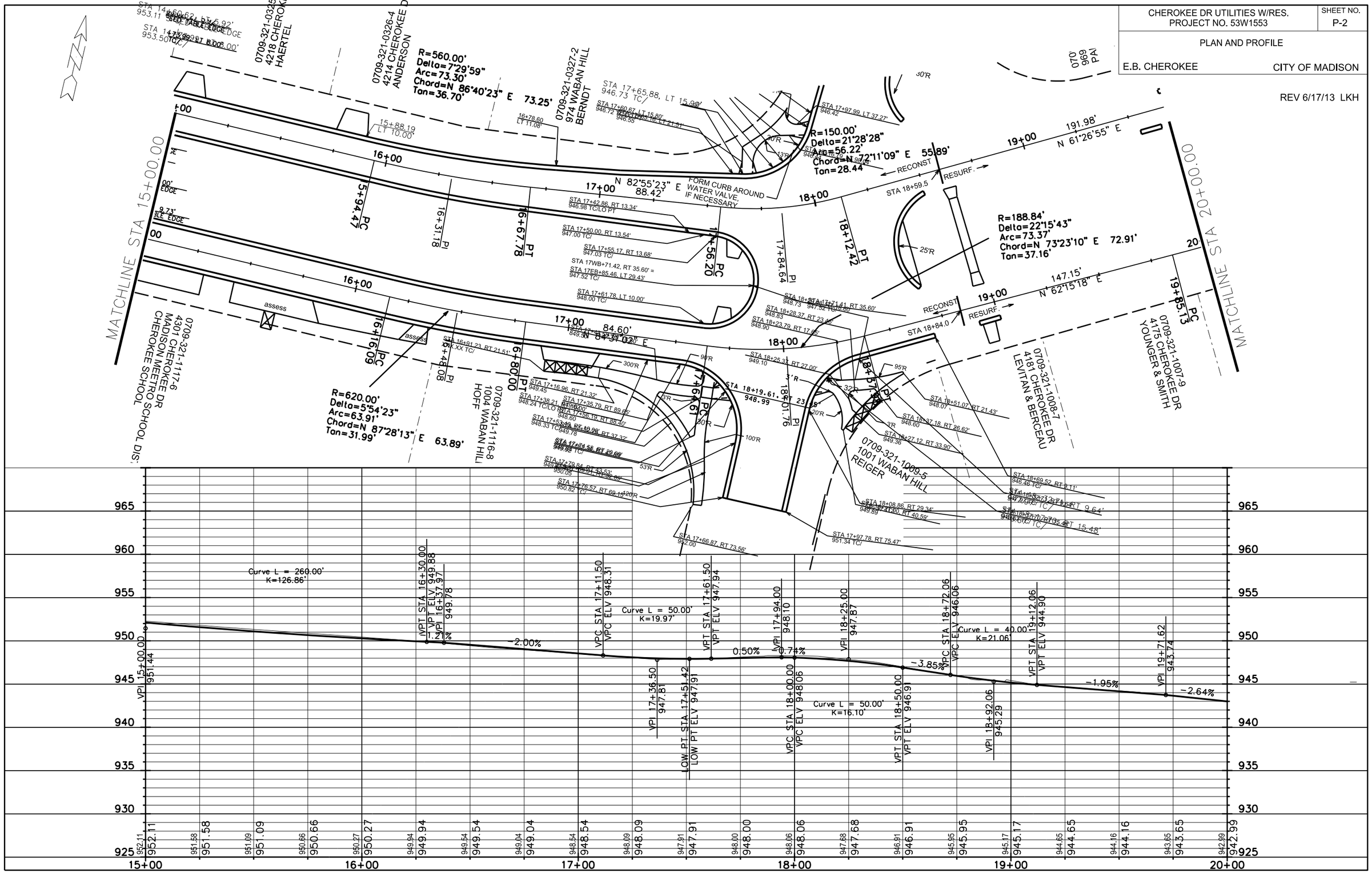

PLOT SCALE: ____

PLOT NAME: ____

REV. DATE: ____

ORIGINATOR: CITY OF MADISON, STREETS DIVISION

FILE NAME: M:\DESIGN\Projects\53W1553\Streets\Design\53W1553-CherokeeEN-PnP 2.dgn

DATE: 6/17/2013

CHEROKEE DR UTILITIES W/RES. PROJECT NO. 53W1553	SHEET NO. P-3
PLAN AND PROFILE	
E.B. CHEROKEE	CITY OF MADISON

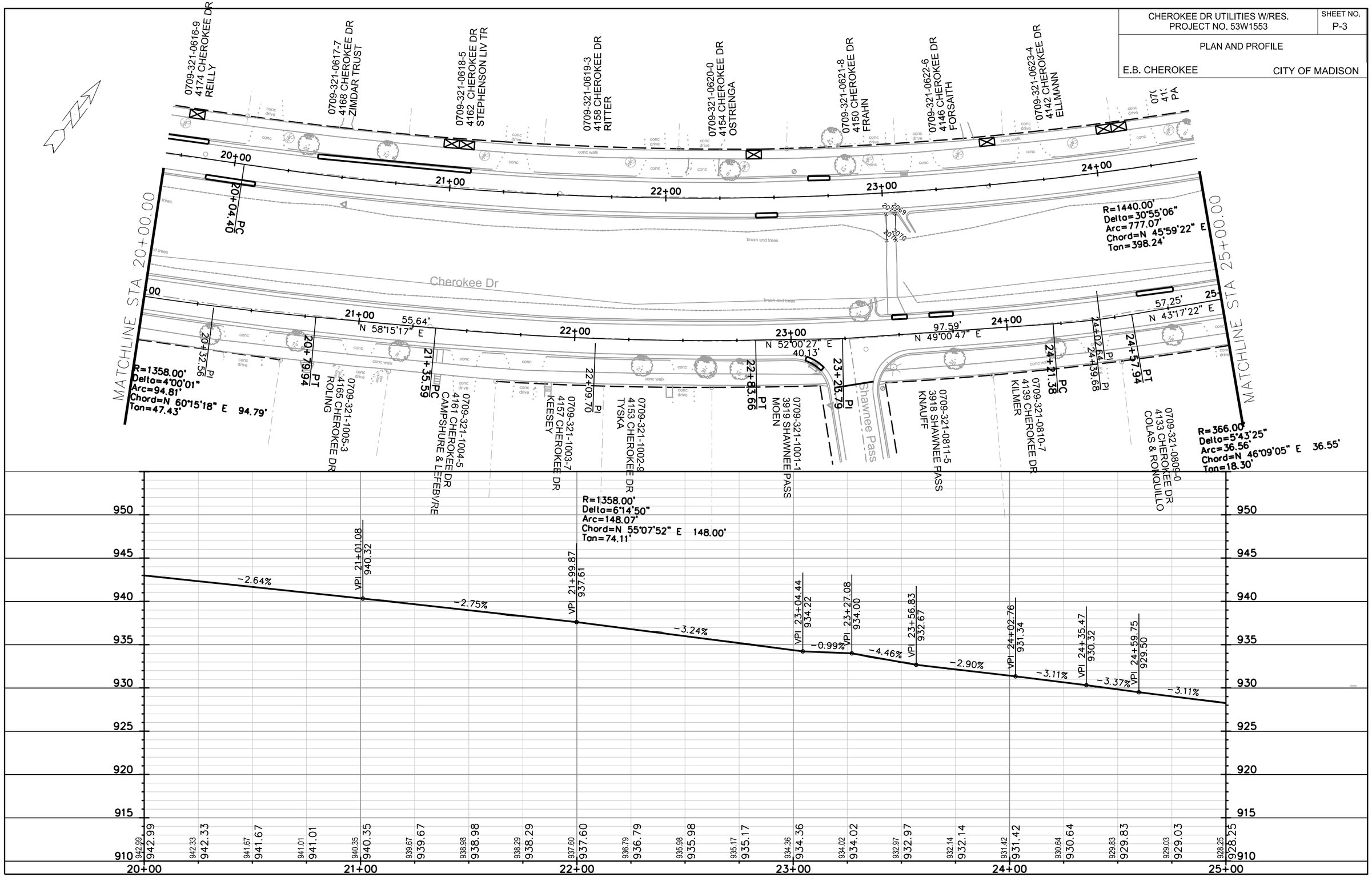

PLOT SCALE: ____

PLOT NAME: ____

REV. DATE: ____

ORIGINATOR: CITY OF MADISON, STREETS DIVISION

FILE NAME: M:\DESIGN\Projects\53W1553\Streets\Design\53W1553-CherokeeEN-PnP 3.dgn

DATE: 2/21/2013

CHEROKEE DR UTILITES W/RES. PROJECT NO. 53W1553	SHEET NO. P-4
PLAN AND PROFILE	
E.B. CHEROKEE	CITY OF MADISON

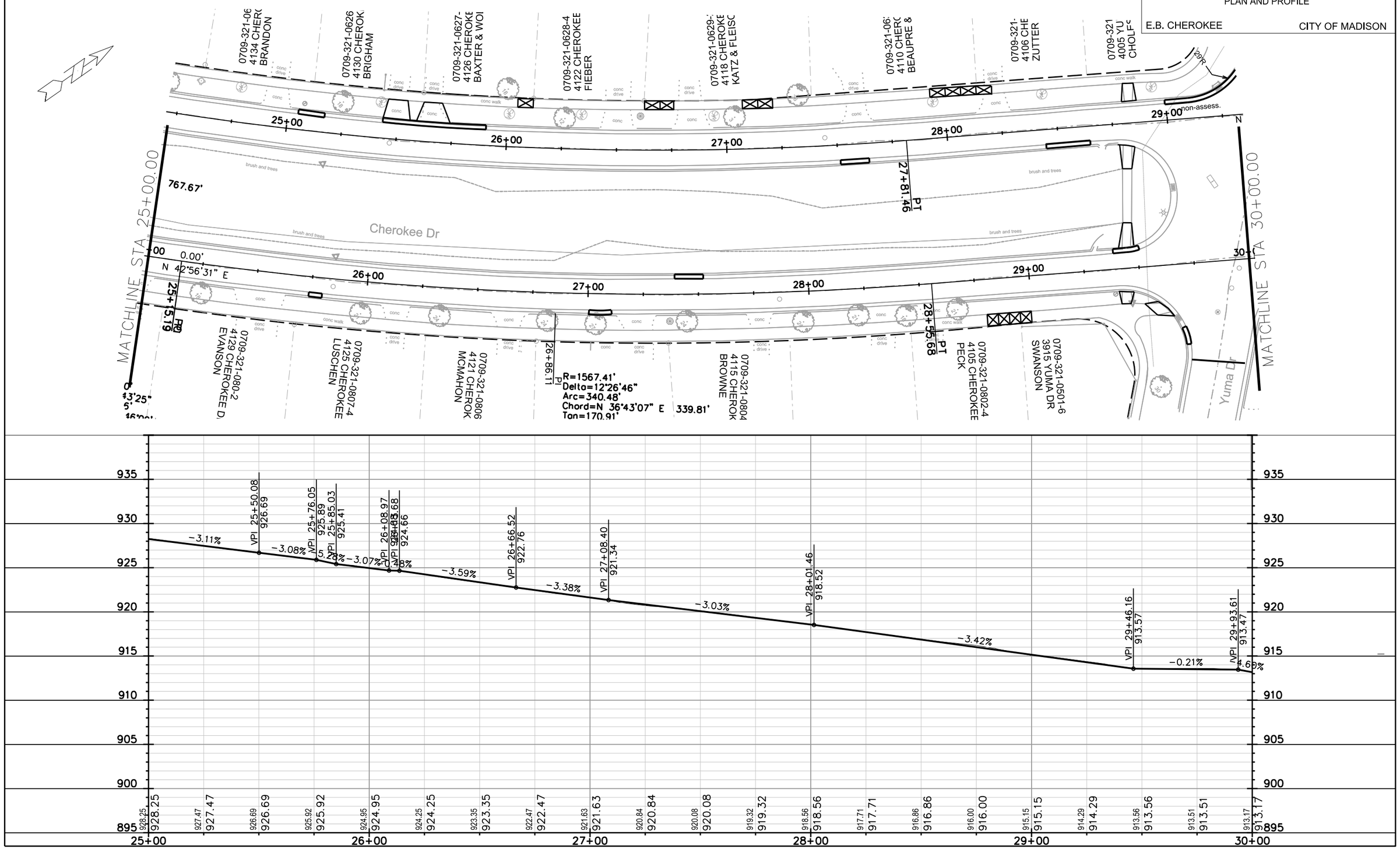

PLOT SCALE: ____

PLOT NAME: ____

REV. DATE: ____

ORIGINATOR: CITY OF MADISON, STREETS DIVISION

FILE NAME: M:\DESIGN\Projects\53W1553\Streets\Design\53W1553-CherokeeEN-PnP 4.dgn

DATE: 2/21/2013

CHEROKEE DR UTILITIES W/RES. PROJECT NO. 53W1553	SHEET NO. P-5
PLAN AND PROFILE	
E.B. CHEROKEE	CITY OF MADISON

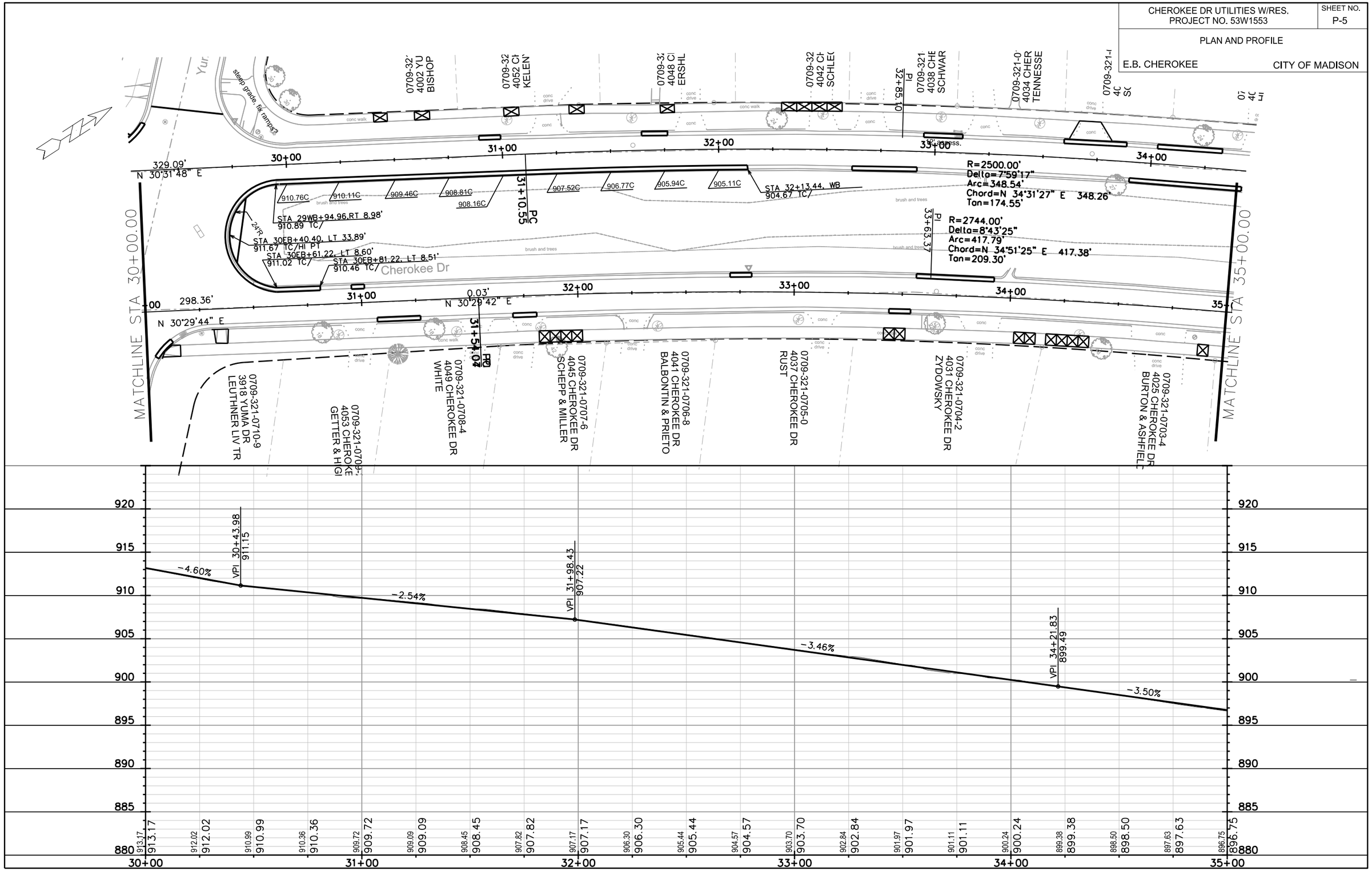

PLOT SCALE: ____

PLOT NAME: ____

REV: DATE: ____

ORIGINATOR: CITY OF MADISON, STREETS DIVISION

FILE NAME: M:\DESIGN\Projects\53W1553\Streets\Design\53W1553-CherokeeEN-PnP 5.dgn

DATE: 2/21/2013

CHEROKEE DR UTILITIES W/RES. PROJECT NO. 53W1553	SHEET NO. P-6
PLAN AND PROFILE	
E.B. CHEROKEE	CITY OF MADISON

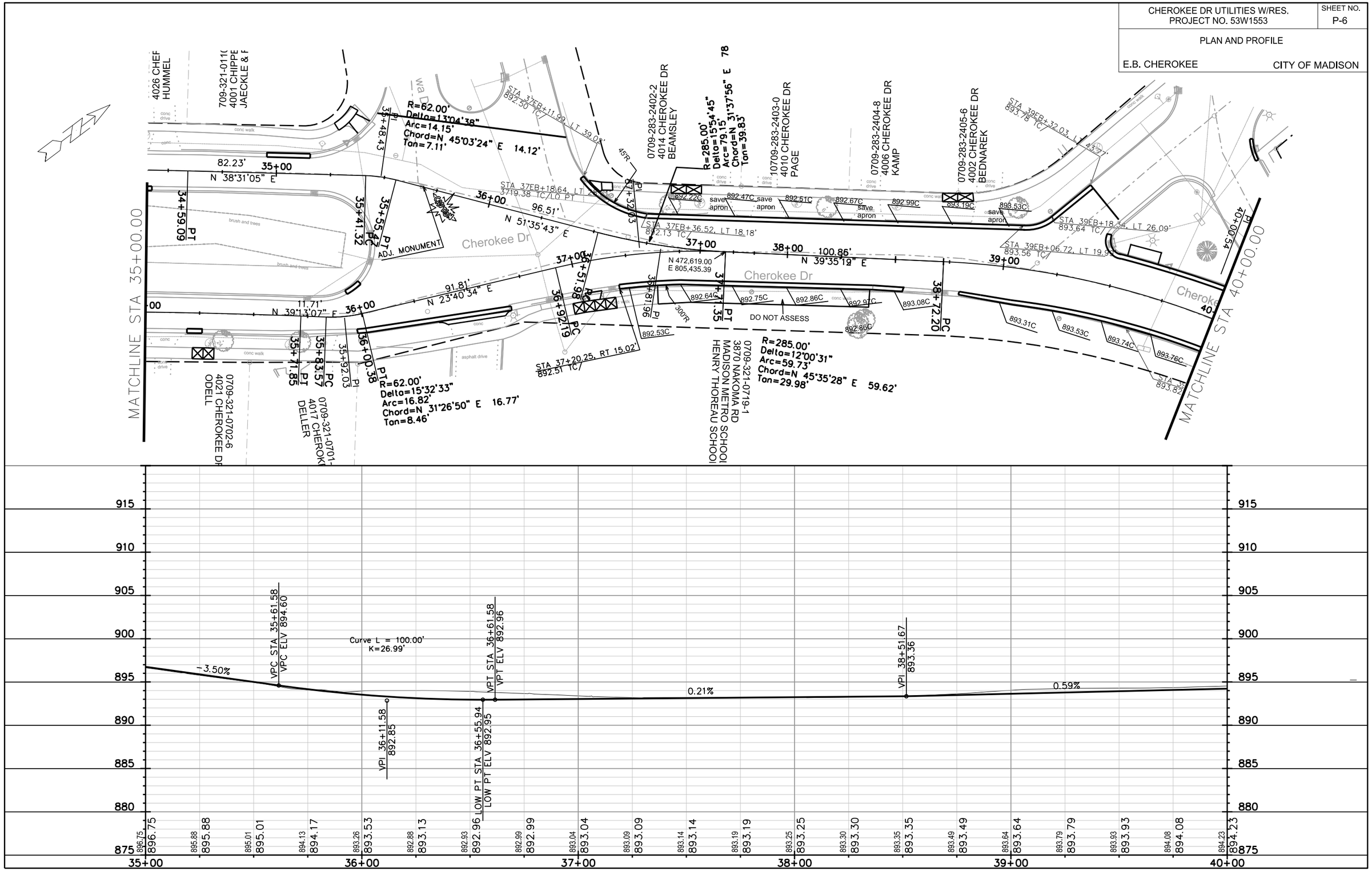

FILE NAME: M:\DESIGN\Projects\53W1553\Streets\Design\53W1553-CherokeeEN-PnP 6.dgn

DATE: 2/28/2013

PLOT SCALE: ____

PLOT NAME: ____

REV. DATE: ____

ORIGINATOR: CITY OF MADISON, STREETS DIVISION

CHEROKEE DR UTILITIES W/RES. PROJECT NO. 53W1553	SHEET NO. P-7
PLAN AND PROFILE	
E.B. CHEROKEE	CITY OF MADISON

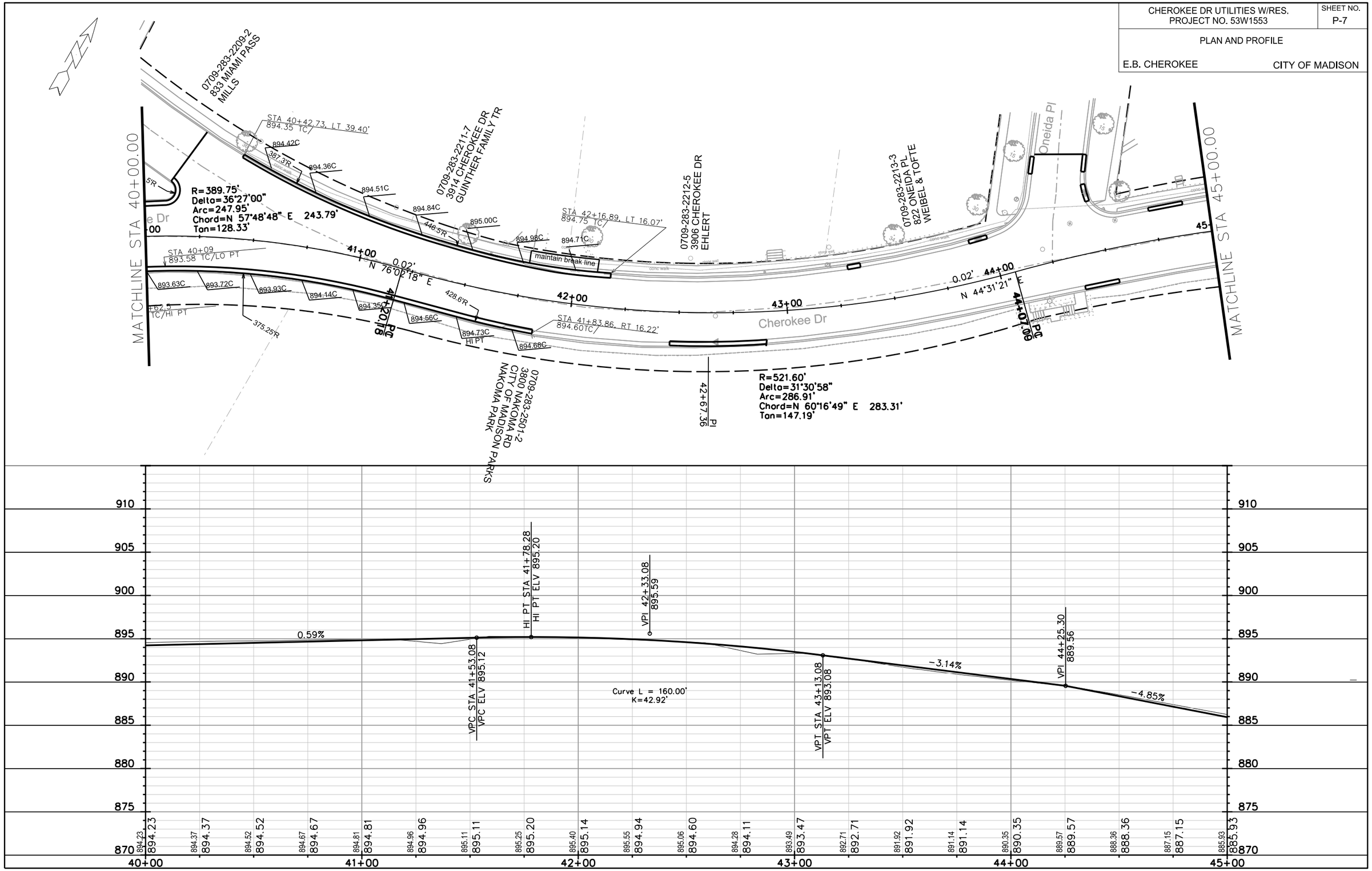

PLOT SCALE: ____

PLOT NAME: ____

REV. DATE: ____

ORIGINATOR: CITY OF MADISON, STREETS DIVISION

FILE NAME: M:\DESIGN\Projects\53W1553\Streets\Design\53W1553-CherokeeEN-PnP 7.dgn

DATE: 2/28/2013

CHEROKEE DR UTILITIES W/RES. PROJECT NO. 53W1553	SHEET NO. P-8
PLAN AND PROFILE	
E.B. CHEROKEE	CITY OF MADISON

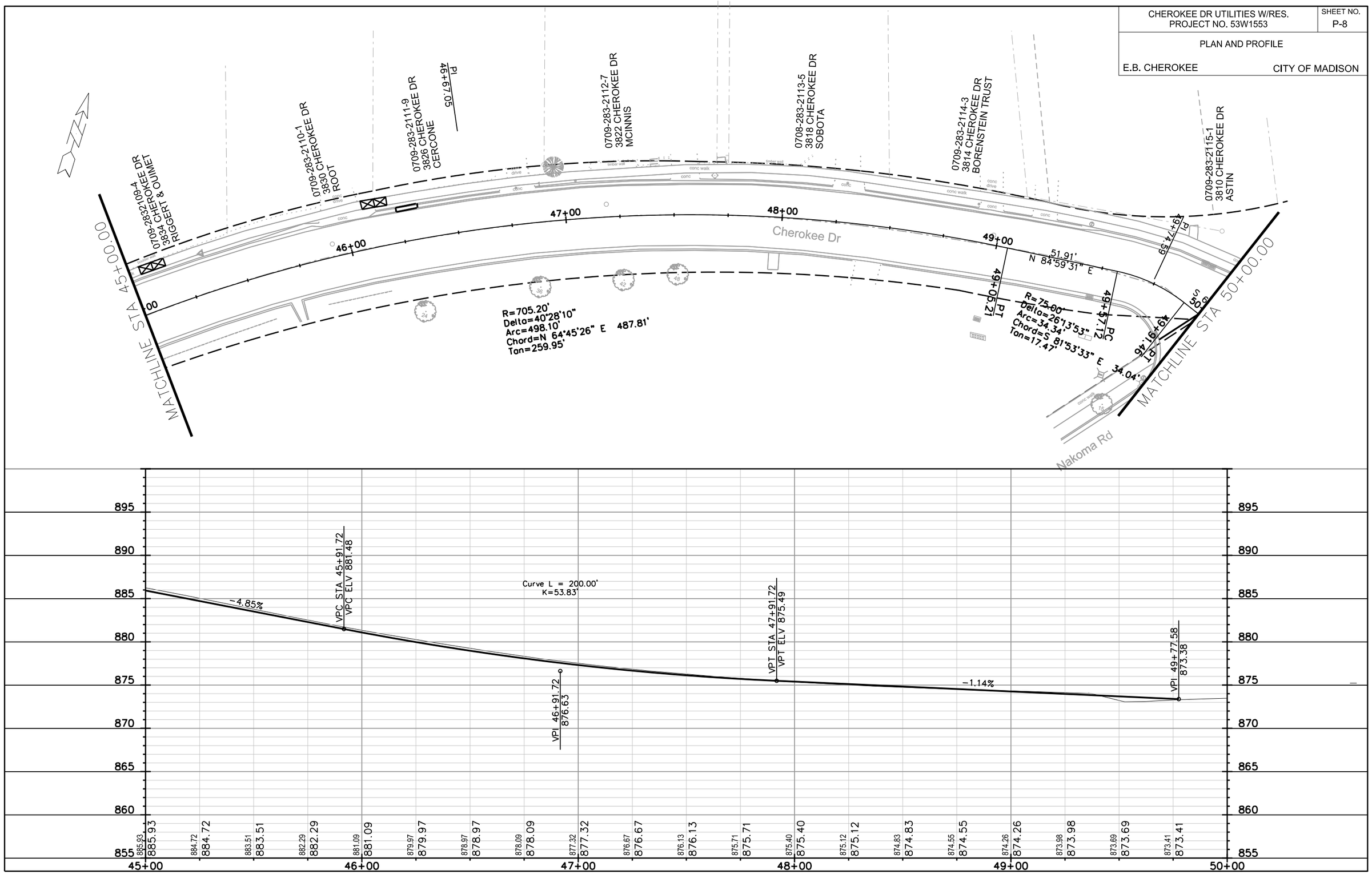

PLOT SCALE: ____

PLOT NAME: ____

REV. DATE: ____

ORIGINATOR: CITY OF MADISON, STREETS DIVISION

FILE NAME: M:\DESIGN\Projects\53W1553\Streets\Design\53W1553-CherokeeEN-PnP 8.dgn

DATE: 2/21/2013

CHEROKEE DR UTILITIES W/RES. PROJECT NO. 53W1553	SHEET NO. P-9
PLAN AND PROFILE	
E.B. CHEROKEE	CITY OF MADISON

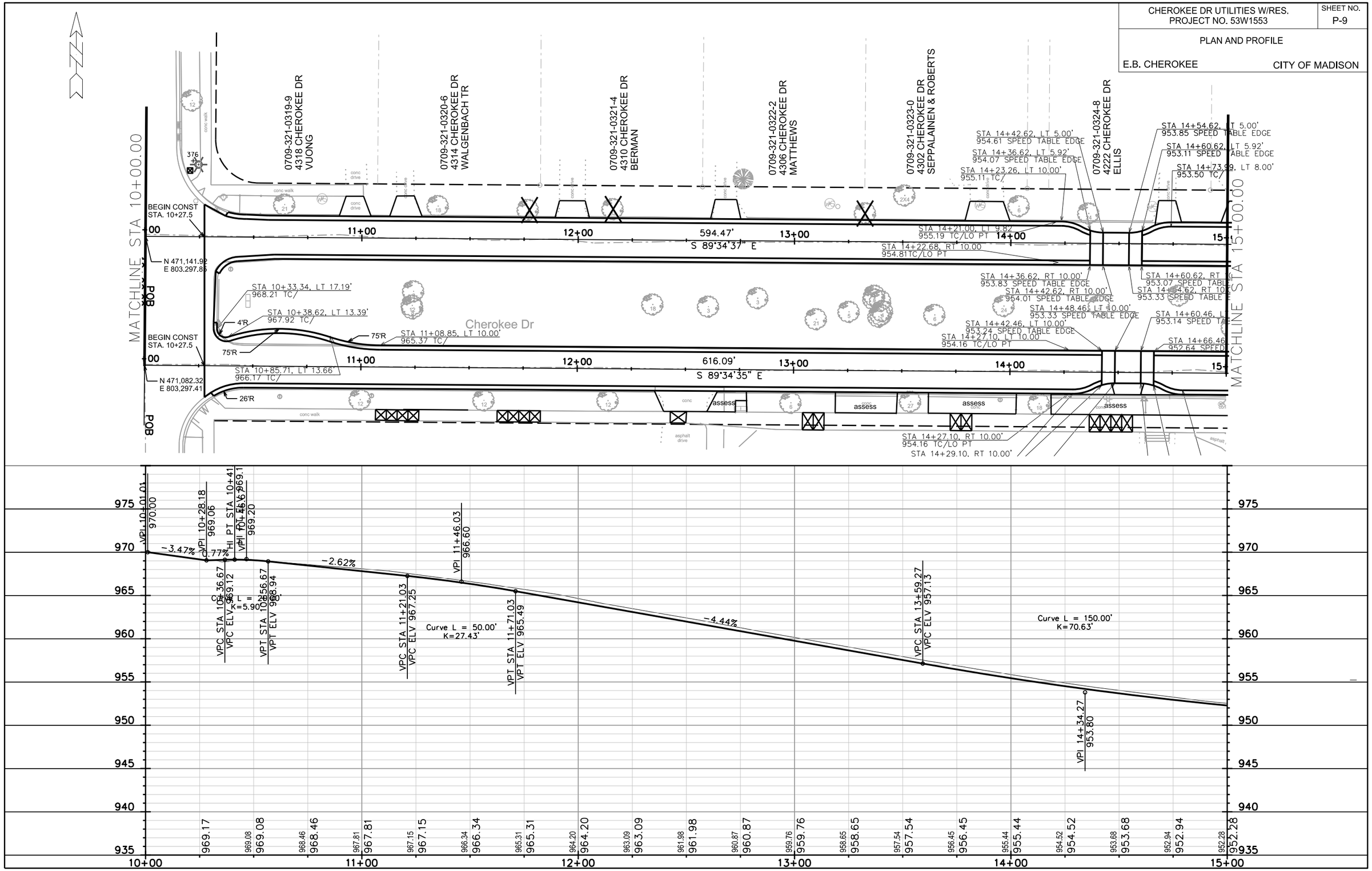

PLOT SCALE: ____

PLOT NAME: ____

REV: DATE: ____

ORIGINATOR: CITY OF MADISON, STREETS DIVISION

FILE NAME: M:\DESIGN\Projects\53W1553\Streets\Design\53W1553-CherokeeEN-PnP 9.dgn

DATE: 2/28/2013

CHEROKEE DR UTILITIES W/RES. PROJECT NO. 53W1553	SHEET NO. P-10
PLAN AND PROFILE	
W.B. CHEROKEE	CITY OF MADISON

REV 6/17/13 LKH

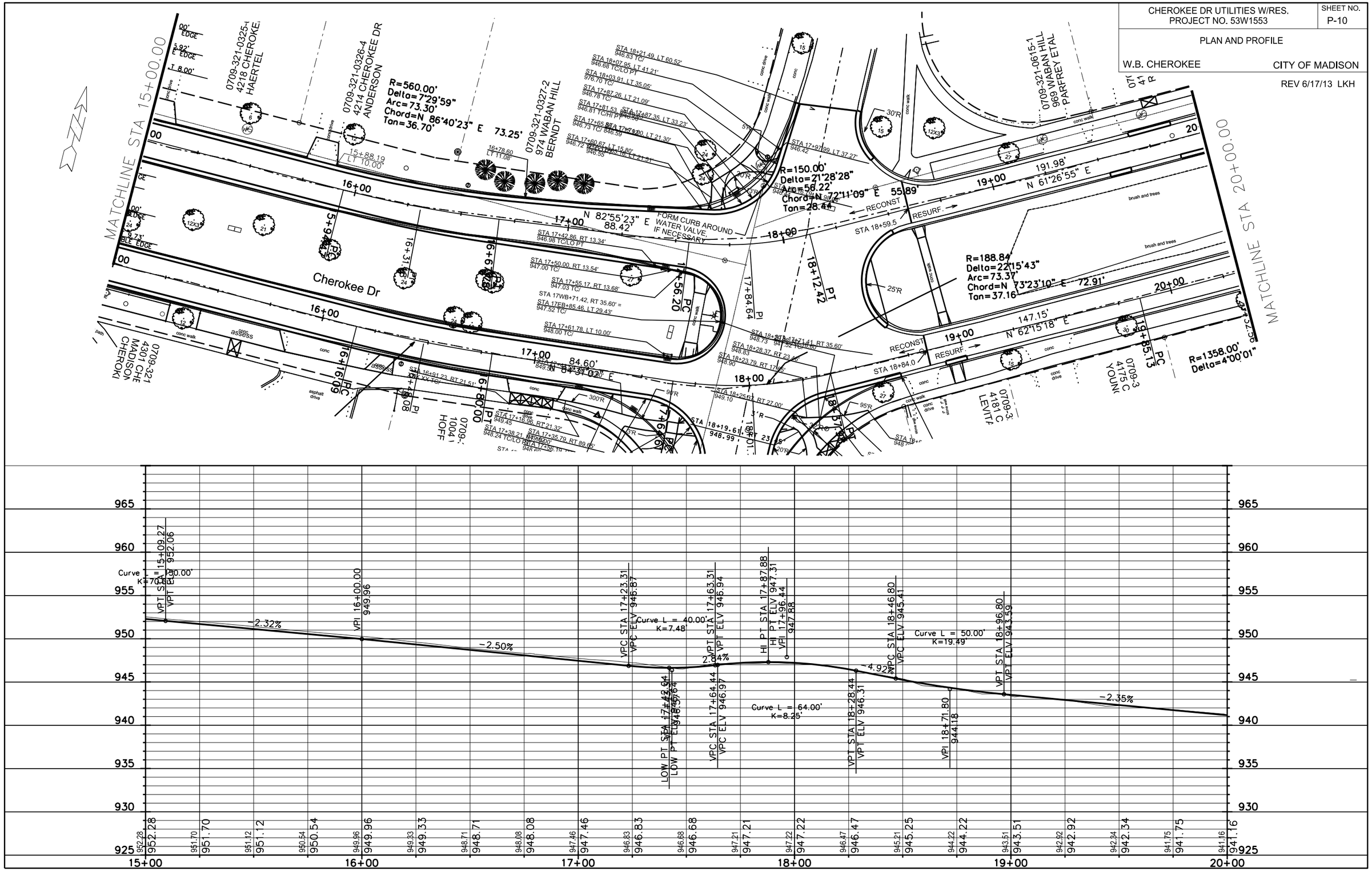

PLOT SCALE: ____

PLOT NAME: ____

REV. DATE: ____

ORIGINATOR: CITY OF MADISON_STREETS DIVISION

FILE NAME: M:\DESIGN\Projects\53W1553\Streets\Design\53W1553-CherokeeEN-PnP 10.dgn

DATE: 6/17/2013

CHEROKEE DR UTILITIES W/RES. PROJECT NO. 53W1553	SHEET NO. P-11
PLAN AND PROFILE	
W.B. CHEROKEE	CITY OF MADISON

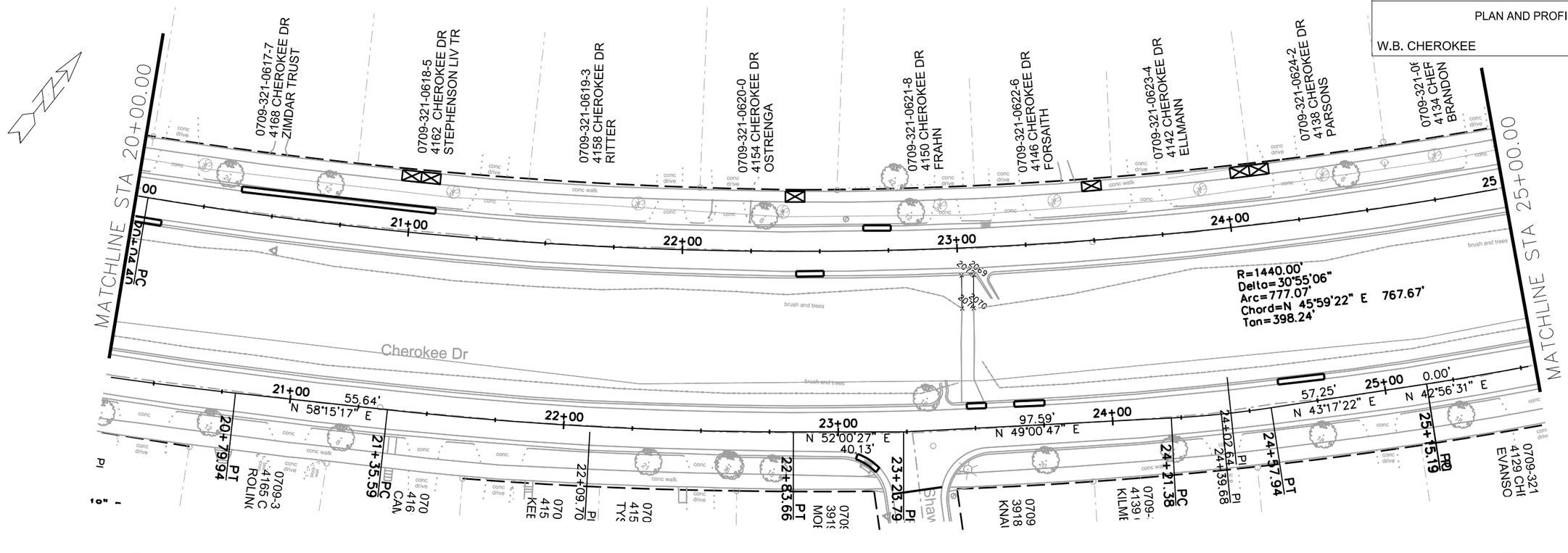

PLOT SCALE: ____

PLOT NAME: ____

REV. DATE: ____

ORIGINATOR: CITY OF MADISON, STREETS DIVISION

FILE NAME: M:\DESIGN\Projects\53W1553\Streets\Design\53W1553-CherokeeEN-PnP 11.dgn

DATE: 2/21/2013

CHEROKEE DR UTILITIES W/RES. PROJECT NO. 53W1553	SHEET NO. P-12
PLAN AND PROFILE	
W.B. CHEROKEE	CITY OF MADISON

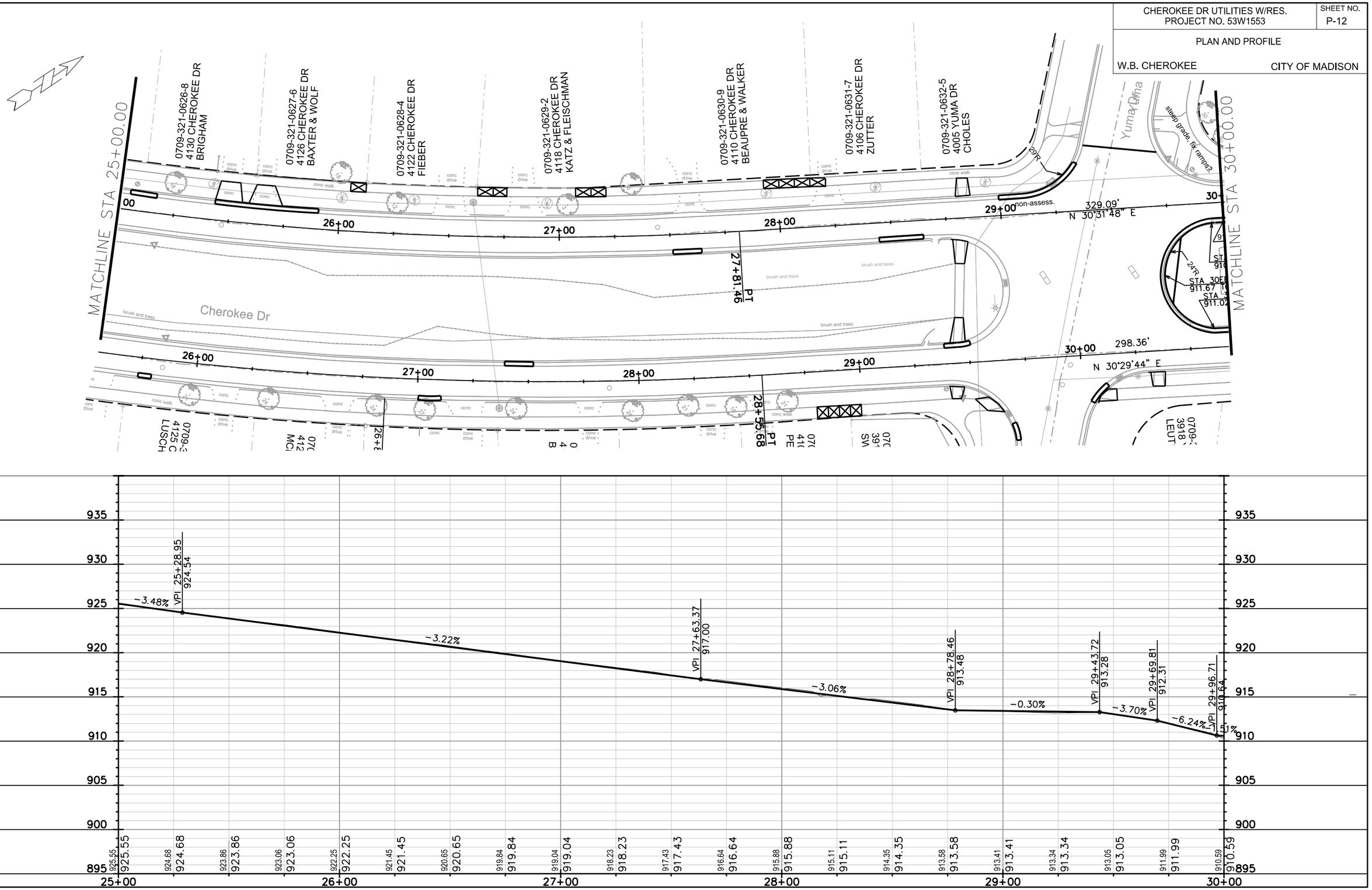

PLOT SCALE: _____

PLOT NAME: _____

REV. DATE: _____

ORIGINATOR: CITY OF MADISON, STREETS DIVISION

FILE NAME: M:\DESIGN\Projects\53W1553\Streets\Design\53W1553-CherokeeEN-PnP 12.dgn

DATE: 2/21/2013

CHEROKEE DR UTILITIES W/RES. PROJECT NO. 53W1553	SHEET NO. P-13
PLAN AND PROFILE	
W.B. CHEROKEE	CITY OF MADISON

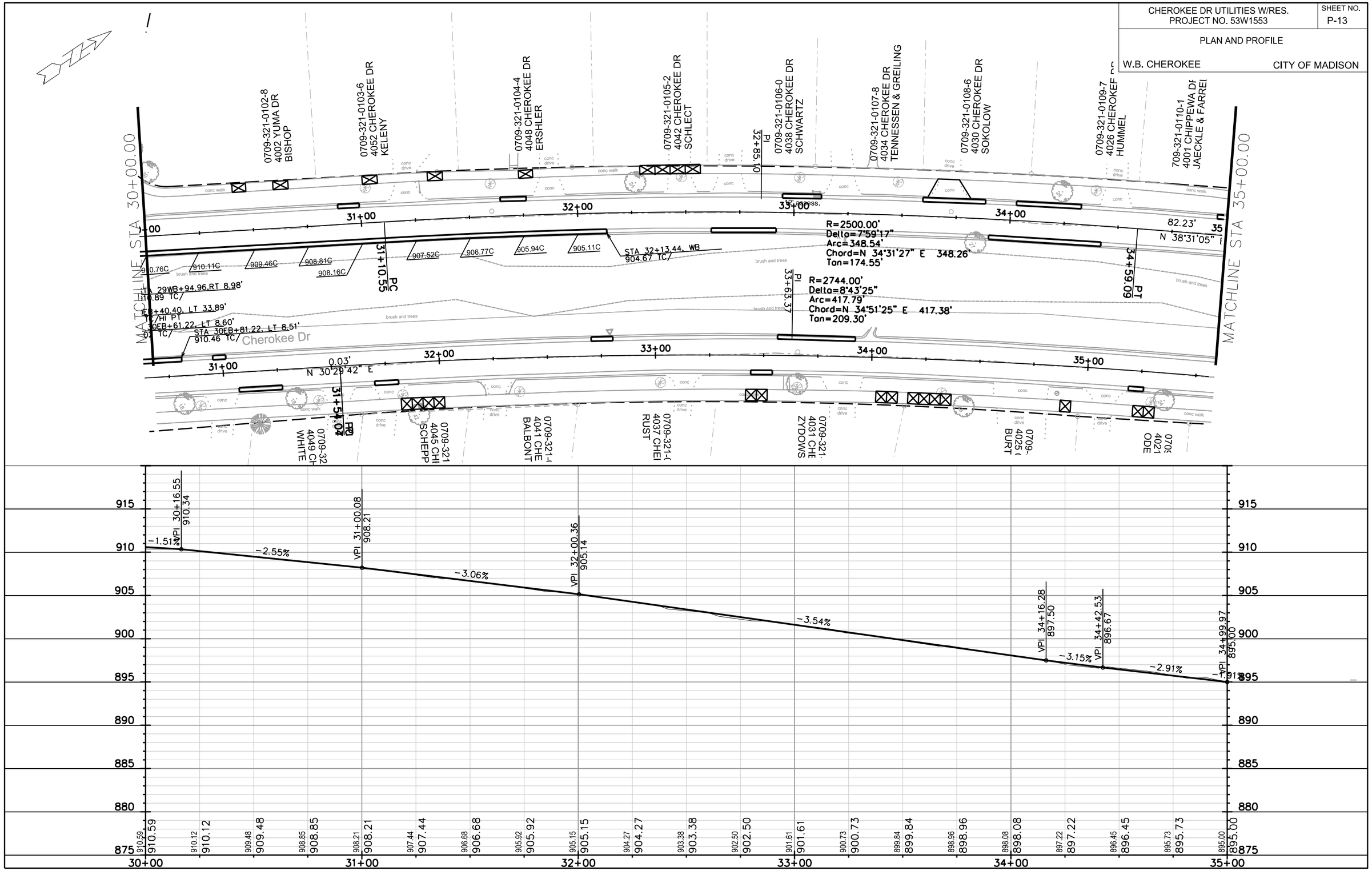

PLOT SCALE: ____

PLOT NAME: ____

REV. DATE: ____

ORIGINATOR: CITY OF MADISON, STREETS DIVISION

FILE NAME: M:\DESIGN\Projects\53W1553\Streets\Design\53W1553-CherokeeEN-PnP 13.dgn

DATE: 2/21/2013

CHEROKEE DR. UTILITIES W/RES. PROJECT NO. 53W1553	SHEET NO. P-14
PLAN AND PROFILE	
W.B. CHEROKEE	CITY OF MADISON

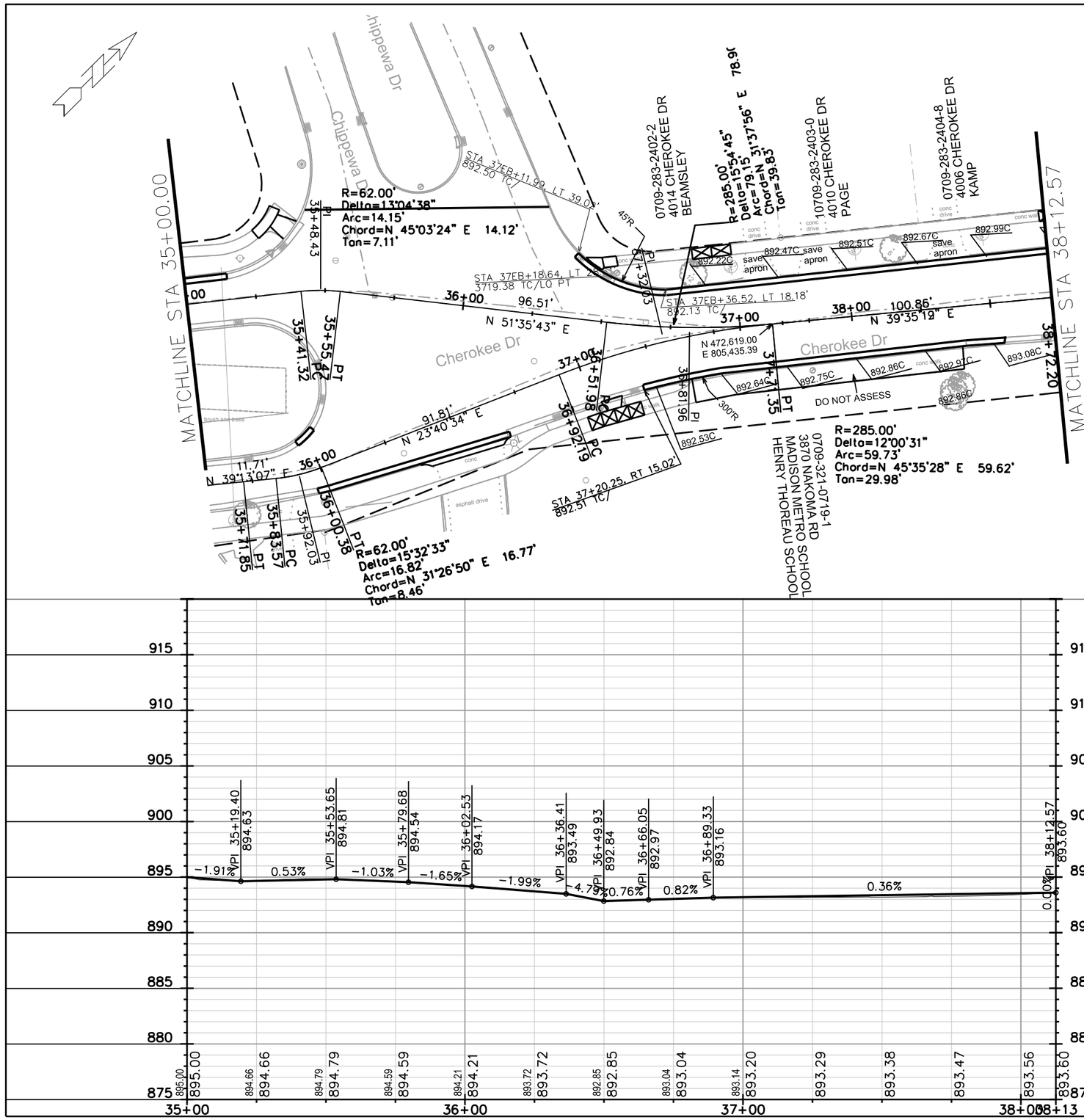

FILE NAME: M:\DESIGN\Projects\53W1553\Streets\Design\53W1553-CherokeeEN-PnP 14.dgn

DATE: 2/21/2013

PLOT SCALE: ____

PLOT NAME: ____

REV. DATE: ____

ORIGINATOR: CITY OF MADISON, STREETS DIVISION

CHEROKEE DR UTILITIES W/ RES.
PROJECT NO. 53W1553

SHEET NO.
U-1

UTILITIES
PLAN AND PROFILE

E.B. CHEROKEE DR

CITY OF MADISON

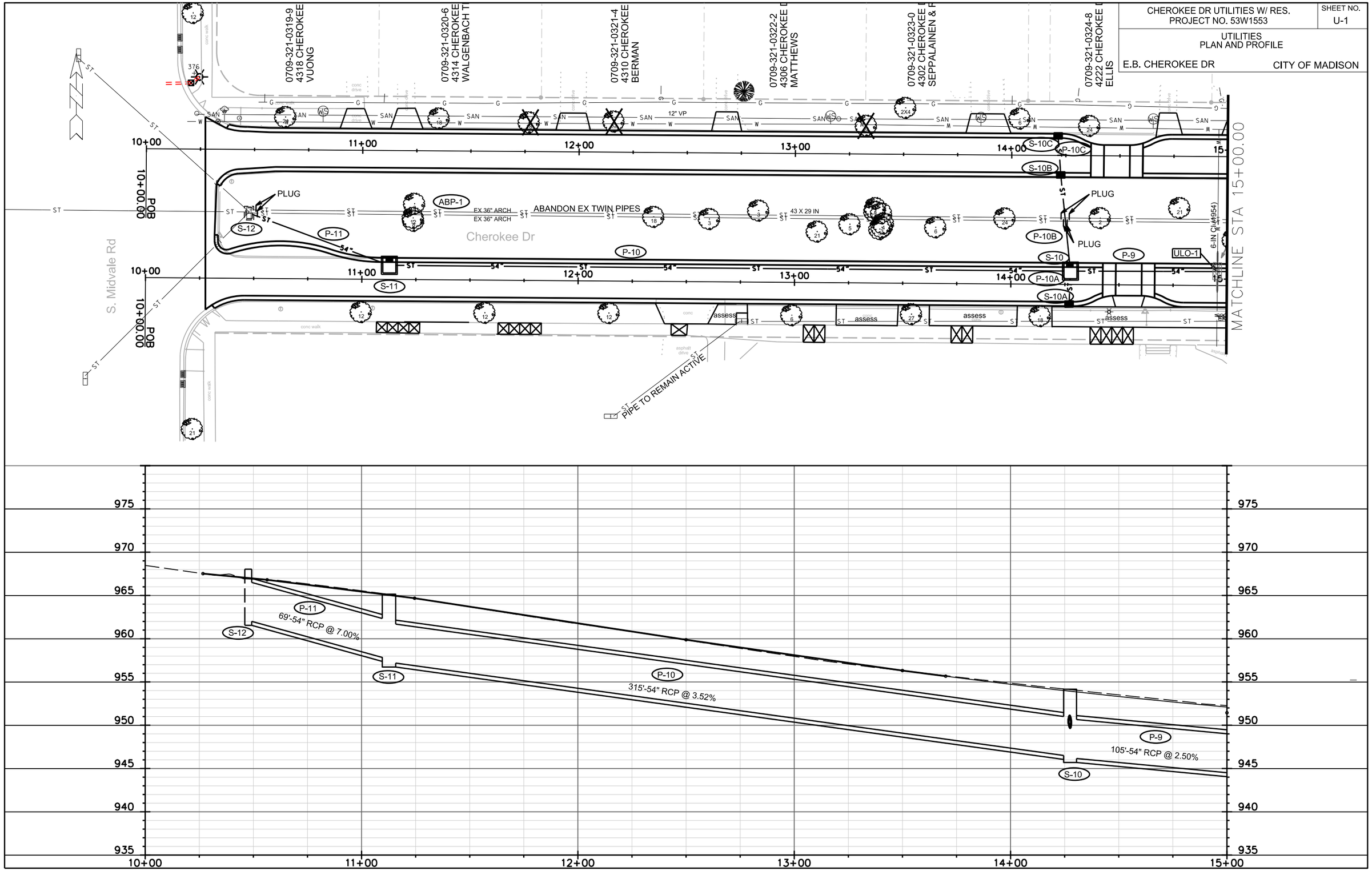

PLOT SCALE: ____

PLOT NAME: ____

REV. DATE: ____

ORIGINATOR: CITY OF MADISON, STREETS DIVISION

FILE NAME: M:\DESIGN\Projects\53W1553\Storm\Design\53W1553-CherokeeSTM-PnPCE1.dgn

DATE: 2/28/2013

CHEROKEE DR UTILITIES W/ RES. PROJECT NO. 53W1553	SHEET NO. U-2
UTILITIES PLAN AND PROFILE	
E.B. CHEROKEE DR	CITY OF MADISON

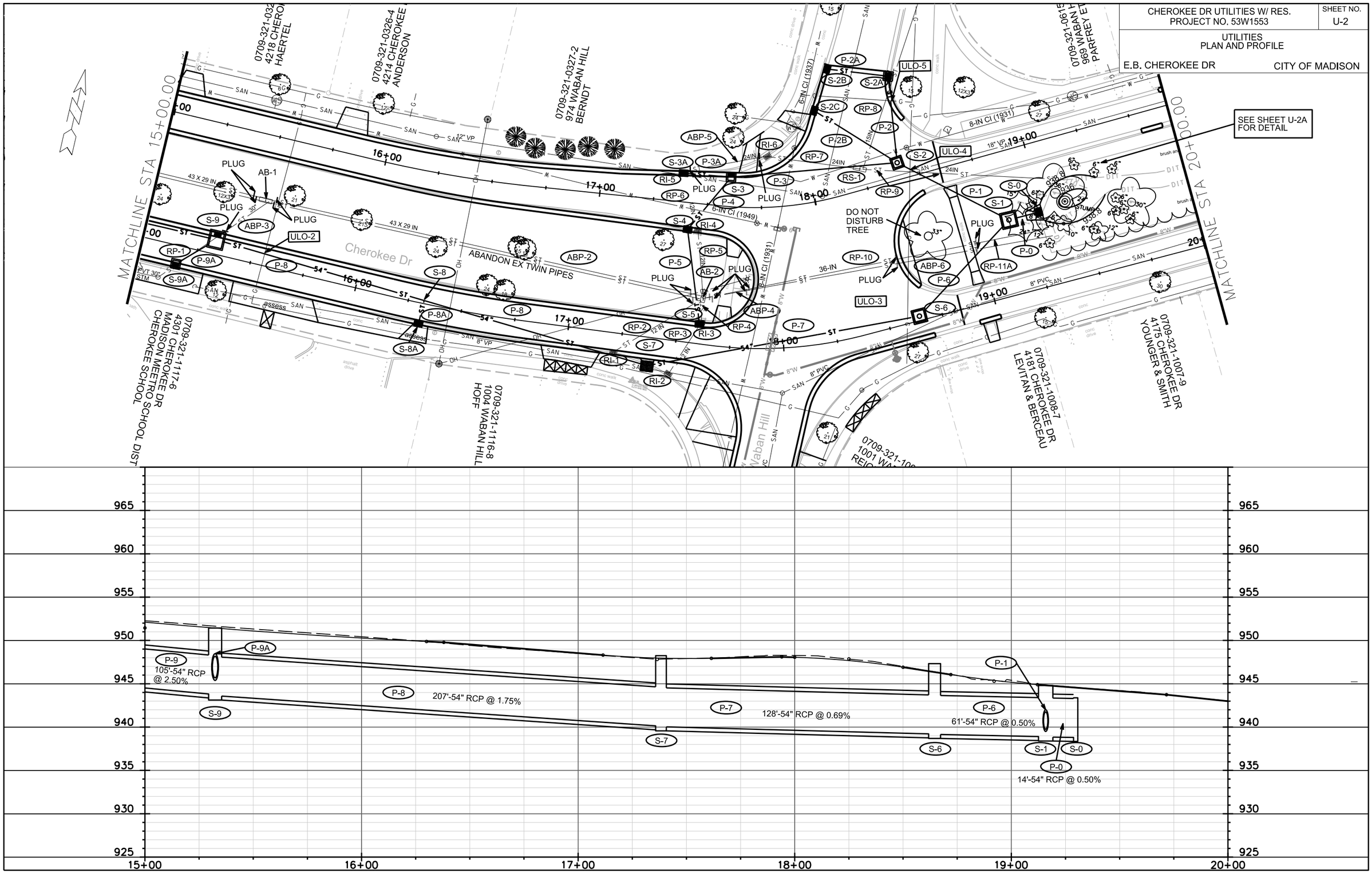

FILE NAME: M:\DESIGN\Projects\53W1553\Storm\Design\53W1553-CherokeeSTM-PnPCE2.dgn

DATE: 2/28/2013

PLOT SCALE: ____

PLOT NAME: ____

REV. DATE: ____

ORIGINATOR: CITY OF MADISON, STREETS DIVISION

CHEROKEE DR UTILITIES
PROJECT NO. 53W1553

SHEET NO. U-2A

UTILITIES
PLAN AND PROFILE

W.B. CHEROKEE DR

CITY OF MADISON

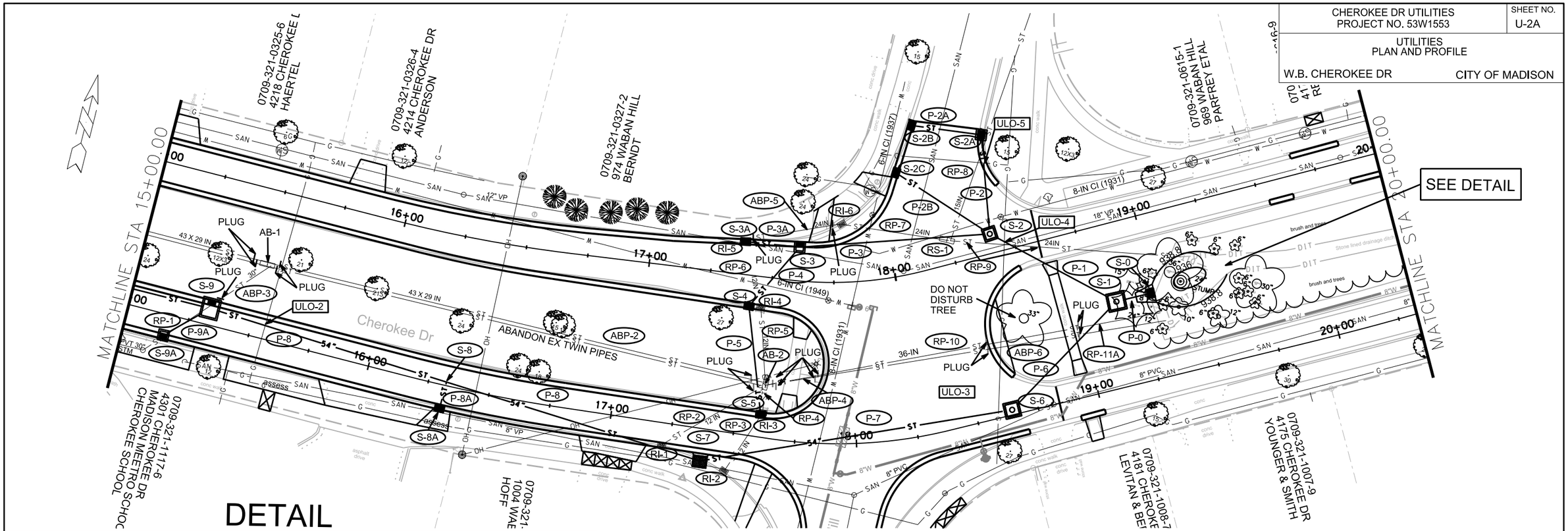

DETAIL

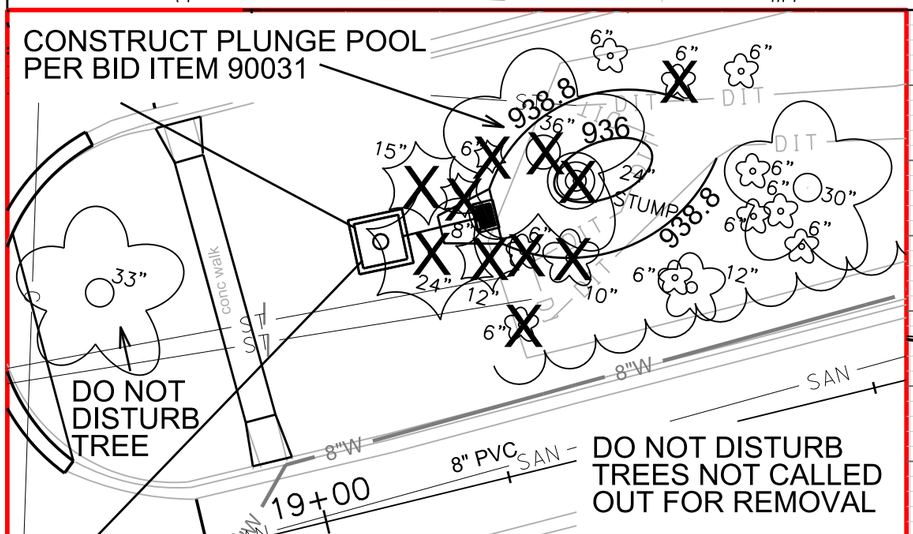

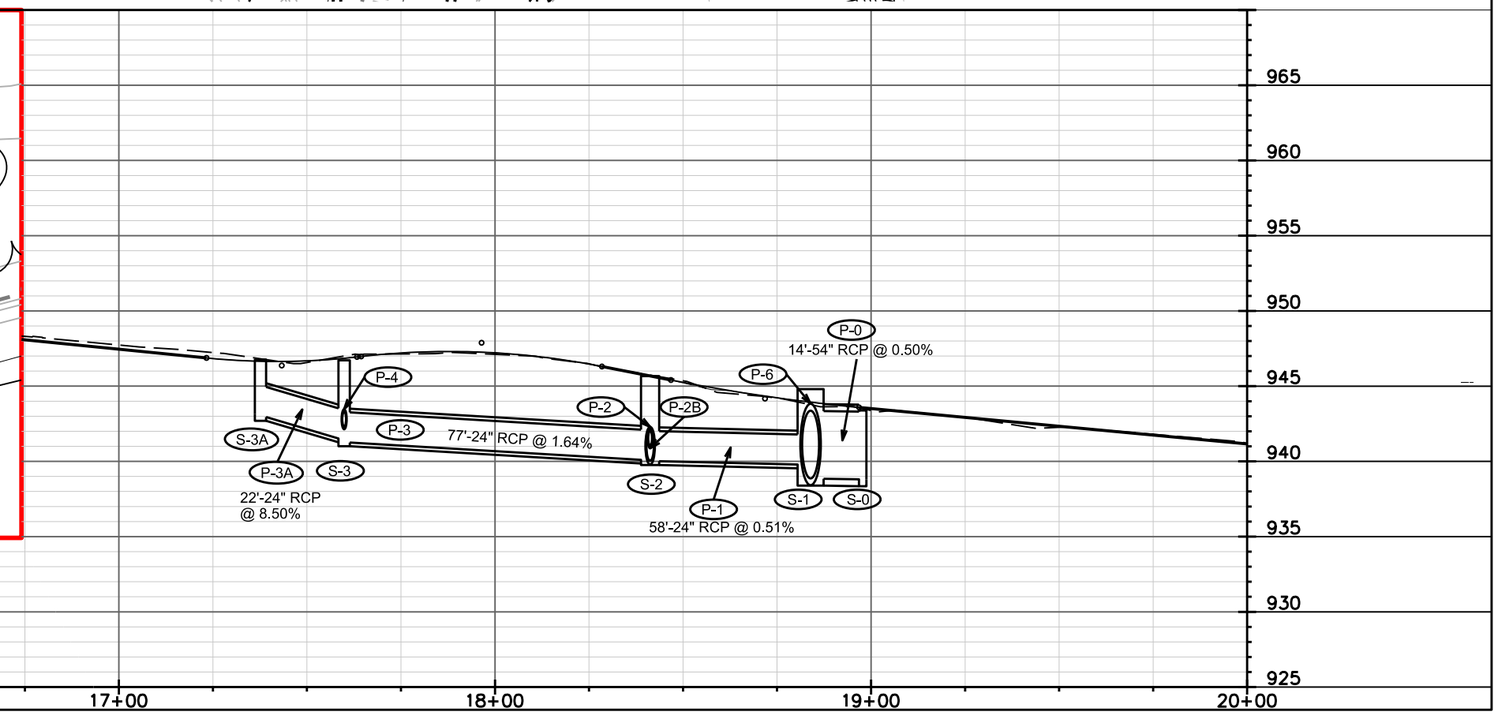

PLOT SCALE: ____
PLOT NAME: ____
REV. DATE: ____
ORIGINATOR: CITY OF MADISON, STREETS DIVISION

FILE NAME: M:\DESIGN\Projects\53W1553\Storm\Design\53W1553-CherokeeSTM-PnP##2.dgn

DATE: 2/28/2013

CHEROKEE DR UTILITIES W/ RES.
PROJECT NO. 53W1553

SHEET NO.
U-3

UTILITIES
PLAN AND PROFILE

E.B. CHEROKEE DR

CITY OF MADISON

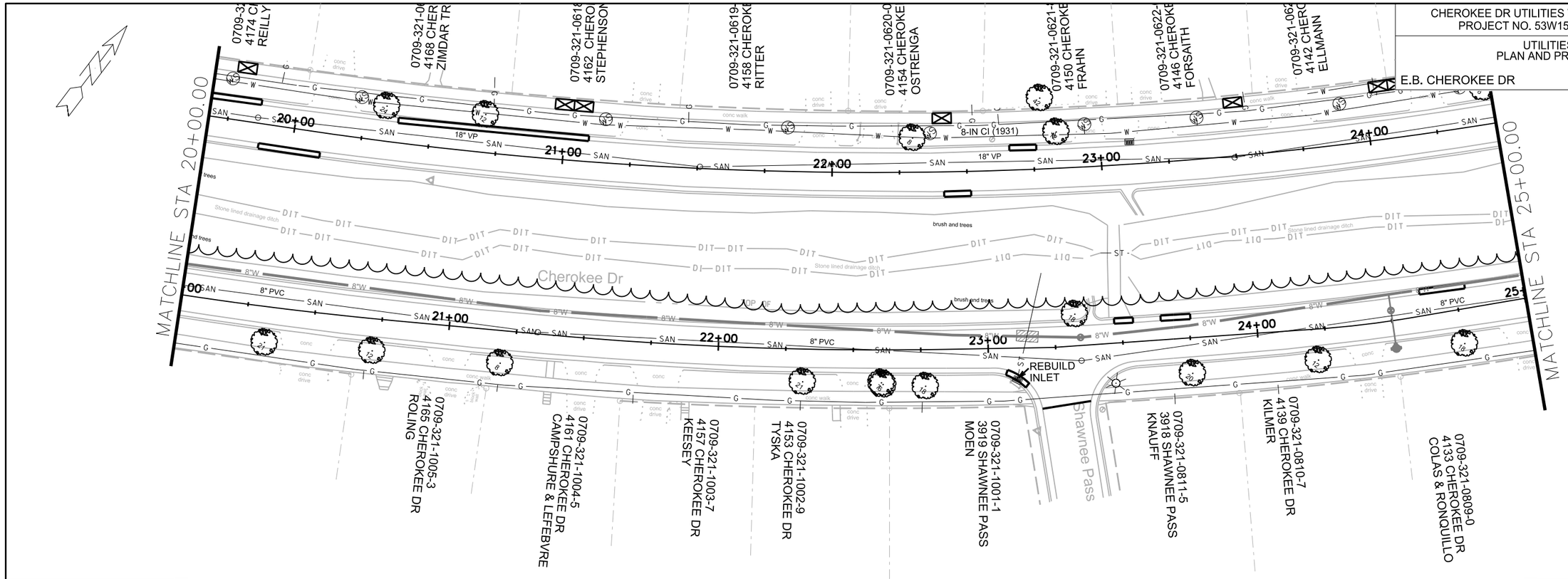

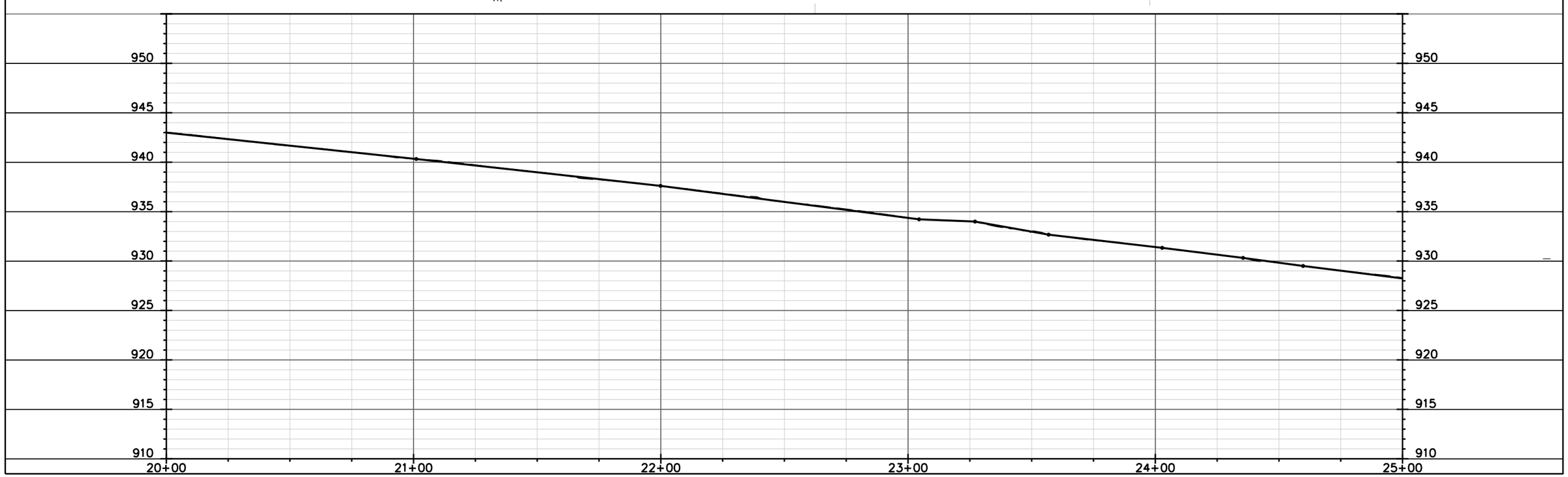

PLOT SCALE: _____

PLOT NAME: _____

REV. DATE: _____

ORIGINATOR: CITY OF MADISON, STREETS DIVISION

FILE NAME: M:\DESIGN\Projects\53W1553\Storm\Design\53W1553-CherokeeSTM-PnPCE3.dgn

DATE: 2/28/2013

CHEROKEE DR UTILITIES W/ RES.
PROJECT NO. 53W1553

SHEET NO.
U-4

UTILITIES
PLAN AND PROFILE

E.B. CHEROKEE DR

CITY OF MADISON

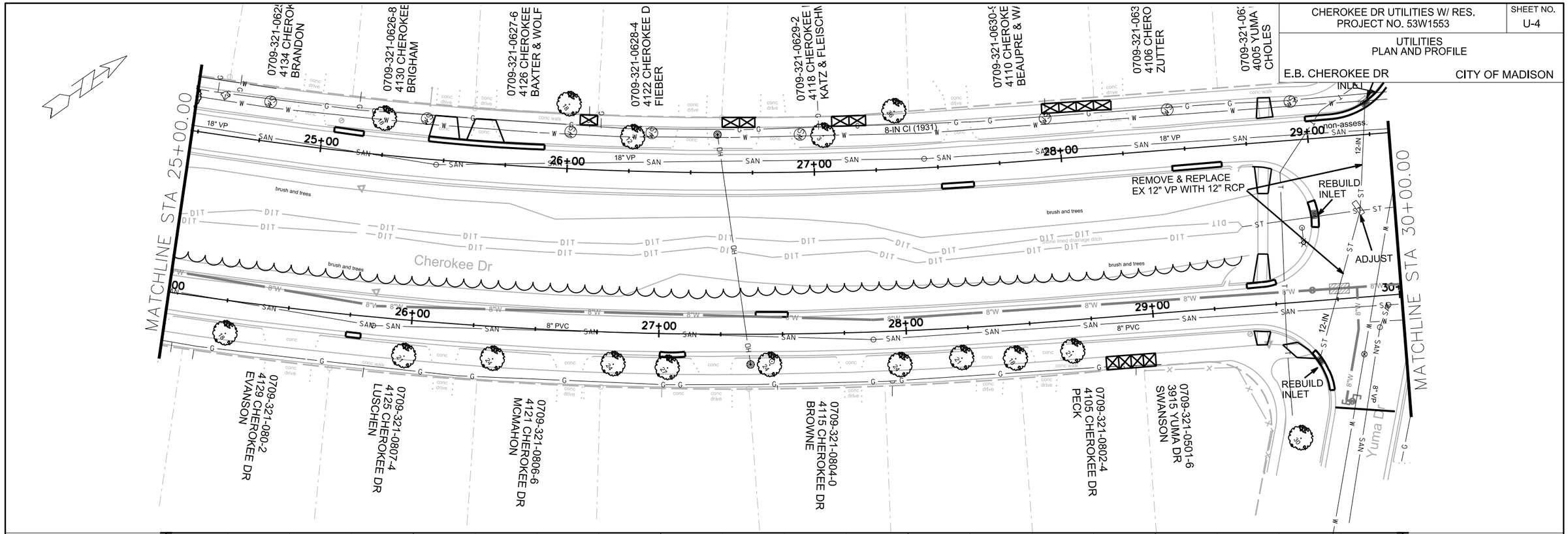

PLOT SCALE: ____

PLOT NAME: ____

REV. DATE: ____

ORIGINATOR: CITY OF MADISON, STREETS DIVISION

FILE NAME: M:\DESIGN\Projects\53W1553\Storm\Design\53W1553-CherokeeSTM-PnPCE4.dgn

DATE: 2/28/2013

CHEROKEE DR. UTILITIES W/ RES.
PROJECT NO. 53W1553

SHEET NO.
U-5

UTILITIES
PLAN AND PROFILE

E.B. CHEROKEE DR

CITY OF MADISON

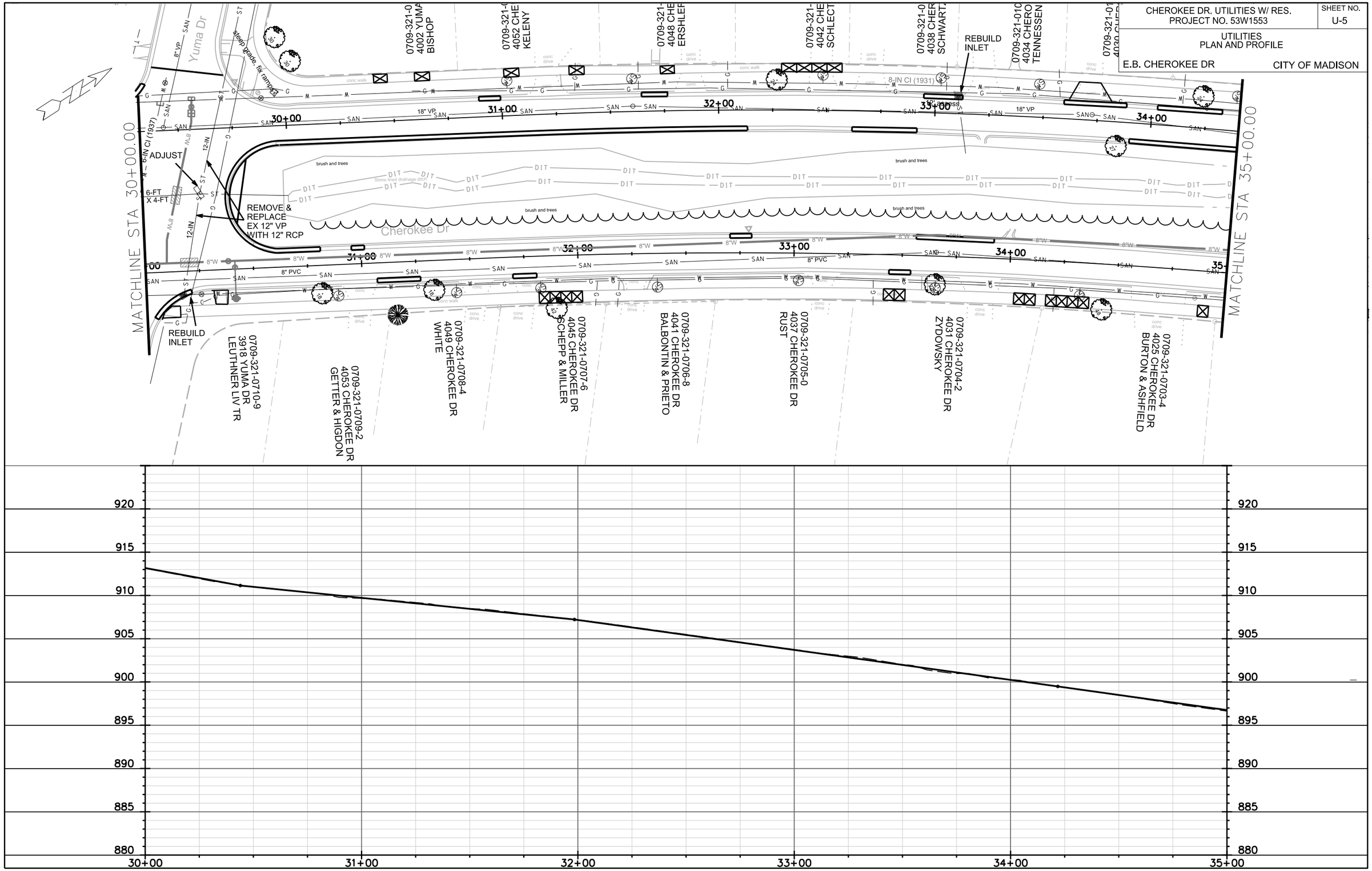

PLOT SCALE: _____

PLOT NAME: _____

REV. DATE: _____

ORIGINATOR: CITY OF MADISON, STREETS DIVISION

FILE NAME: M:\DESIGN\Projects\53W1553\Storm\Design\53W1553-CherokeeSTM-PnPCE5.dgn

DATE: 2/28/2013

CHEROKEE DR UTILITIES W/ RES. PROJECT NO. 53W1553	SHEET NO. U-6
UTILITIES PLAN AND PROFILE	
E.B. CHEROKEE DR	CITY OF MADISON

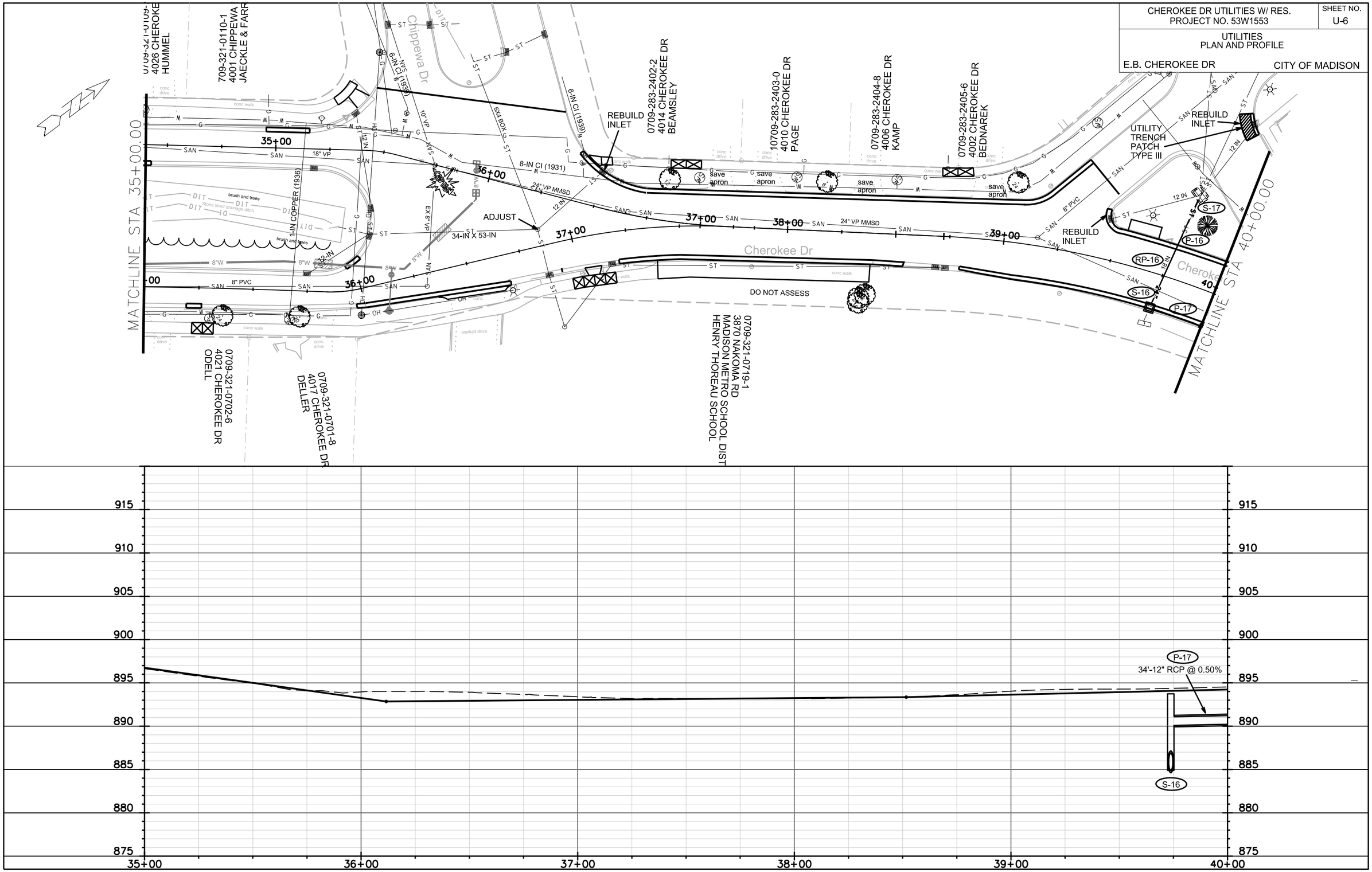

PLOT SCALE: ____

PLOT NAME: ____

REV. DATE: ____

ORIGINATOR: CITY OF MADISON, STREETS DIVISION

FILE NAME: M:\DESIGN\Projects\53W1553\Storm\Design\53W1553-CherokeeSTM-PnPCE6.dgn

DATE: 3/1/2013

CHEROKEE DR UTILITIES W/ RES. PROJECT NO. 53W1553	SHEET NO. U-7
UTILITIES PLAN AND PROFILE	
E.B. CHEROKEE DR	CITY OF MADISON

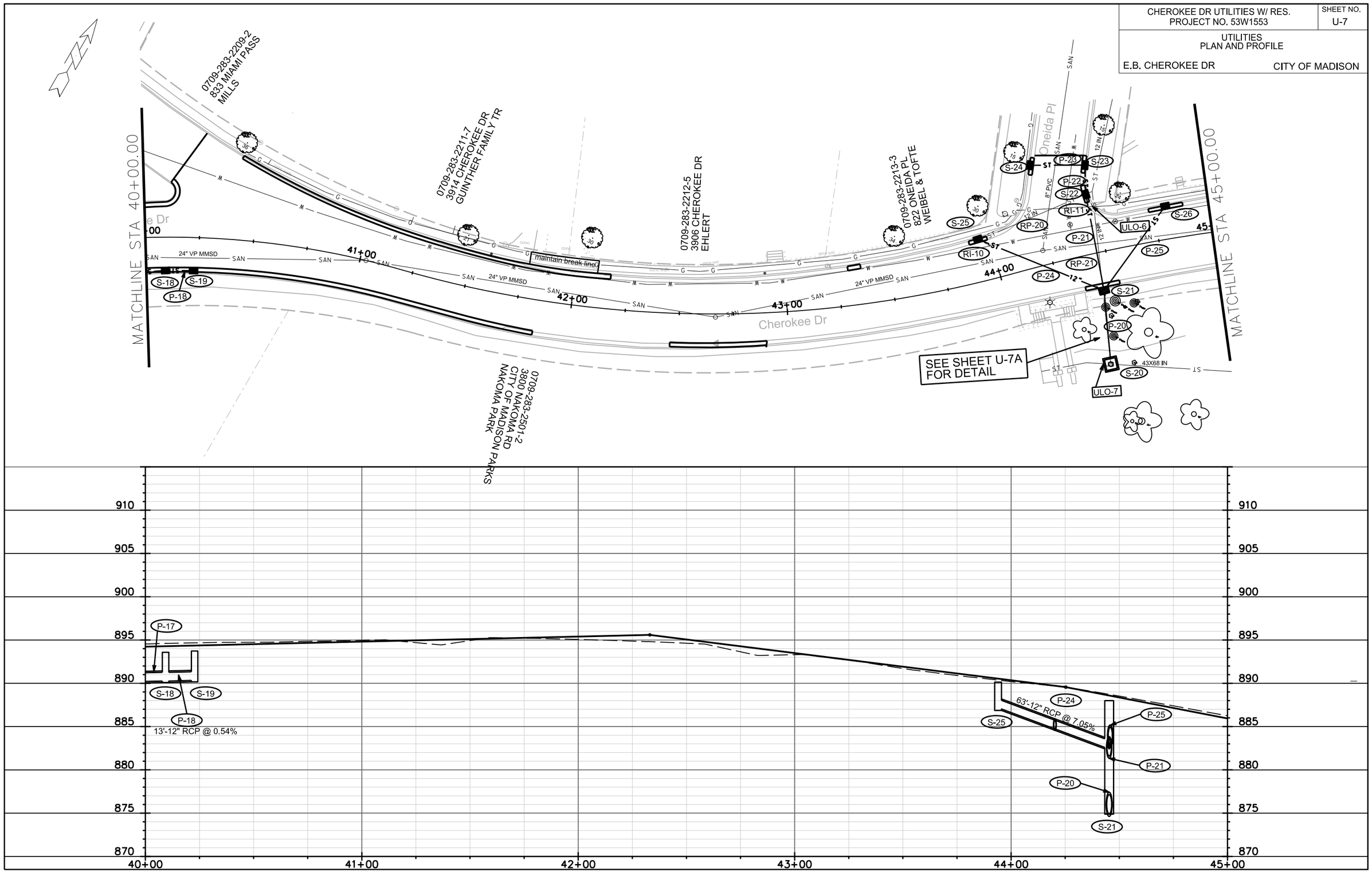

PLOT SCALE: ____

PLOT NAME: ____

REV. DATE: ____

ORIGINATOR: CITY OF MADISON, STREETS DIVISION

FILE NAME: M:\DESIGN\Projects\53W1553\Storm\Design\53W1553-CherokeeSTM-PnPCE7.dgn

DATE: 2/28/2013

CHEROKEE DR UTILITIES W/ RES.
PROJECT NO. 53W1553

SHEET NO.
U-7A

UTILITIES
PLAN AND PROFILE

NAKOMA PARK ACCESS

CITY OF MADISON

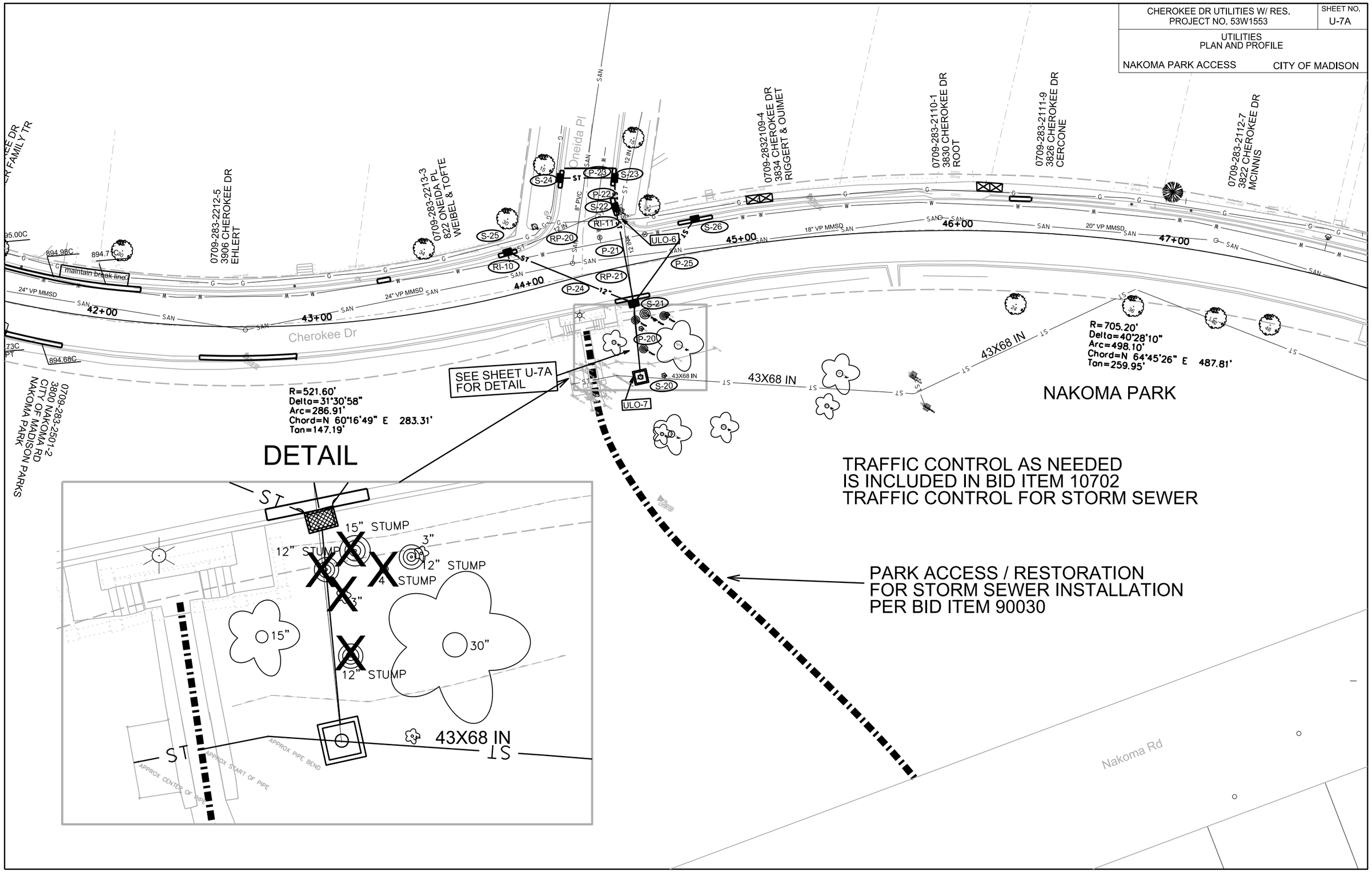

PLOT SCALE: ____
PLOT NAME: ____
REV. DATE: ____
ORIGINATOR: CITY OF MADISON, STREETS DIVISION

FILE NAME: M:\DESIGN\Projects\53W1553\Storm\Design\53W1553-CherokeeSTM_Details##.dgn

2/28/2013

CHEROKEE DR UTILITIES W/ RES. PROJECT NO. 53W1553	SHEET NO. U-8
UTILITIES PLAN AND PROFILE	
E.B. CHEROKEE DR	CITY OF MADISON

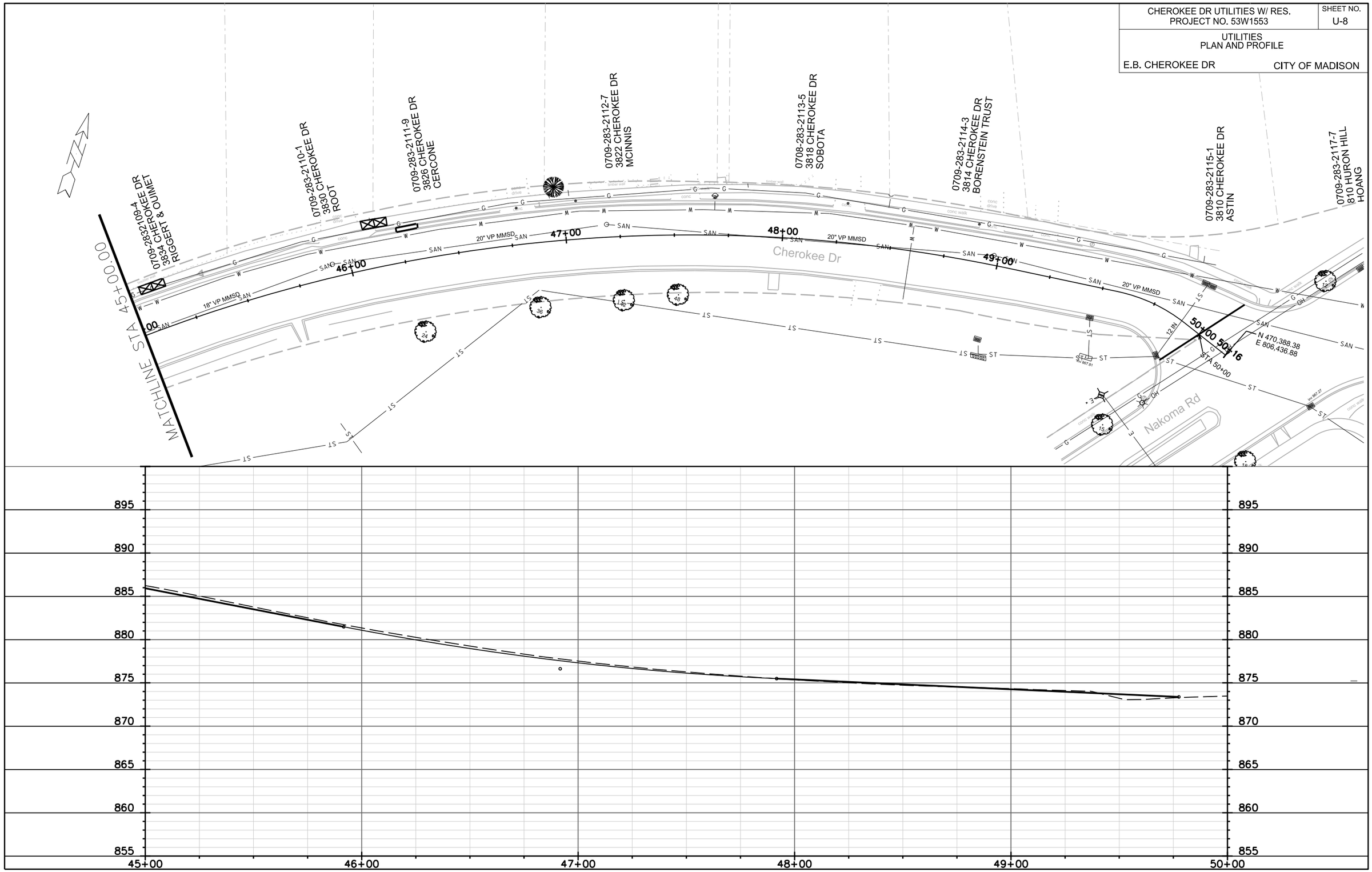

PLOT SCALE: ____

PLOT NAME: ____

REV. DATE: ____

ORIGINATOR: CITY OF MADISON, STREETS DIVISION

FILE NAME: M:\DESIGN\Projects\53W1553\Storm\Design\53W1553-CherokeeSTM-PnPCE8.dgn

DATE: 2/28/2013

STORM SEWER SCHEDULE

ALIGNMENT CODES:

'CE'= CHEROKEE DR EAST BOUND
'CW'= CHEROKEE DR WEST BOUND

* **REVISED 3/18/13 EEA**

CHEROKEE DR	SHEET NO.
PROJECT NO. 53W1553	U-9
STORM SEWER SCHEDULE	CITY OF MADISON

STRUCTURES

STRUC. NO.	STATION	LOCATION (OFFSET)	TYPE	TOP OF CASTING	E.I.	DEPTH	NOTES
S-0	19'CW'+00.00	RT-32.00	54" RCP AE	-	938.80	-	W/ GATE
S-1	18'CW'+84.00	RT-31.50	6X6 SAS	944.80	938.87	5.93	FP; W/ R-1550-0054
S-2	18'CW'+41.39	LT-7.72	4X4 SAS	945.67	940.04	5.63	FP; W/ R-1550-0054
S-2A	18'CW'+48.30	LT-47.57	3X3 SAS	946.19	940.99	5.20	W/ R-3067-7004-V; (1)
S-2B	18'CW'+20.89	LT-58.78	H INLET	946.83	942.78	4.05	W/ R-3067-7004-V
S-2C	18'CW'+09.81	LT-41.57	H INLET	946.68	943.28	3.40	LP; W/ R-3067-7004-V
S-3	17'CW'+60.67	LT-15.30	3X3 SAS	946.72	941.30	5.42	LP; W/ R-3067-7004-V
S-3A	17'CW'+37.60	LT-14.00	H INLET	946.77	943.17	3.60	W/ R-3067-7004-V
S-4	17'CW'+42.86	RT-12.84	H INLET	946.98	943.44	3.54	LP; W/ R-3067-7004-V
S-5	17'CE'+61.78	LT-9.50	H INLET	948.00	943.98	4.02	W/ R-3067-7004-V
S-6	18'CE'+64.61	LT-2.00	5X5 SAS	946.52	939.18	7.34	FP; W/ R-1550-0054
S-7	17'CE'+38.21	RT-6.56	TERRACE INLET TYPE II	948.24	940.06	8.18	LP; PER SDD 5.7.12A
S-8	16'CE'+32.04	LT-4.50	TAP	-	943.69	-	MATCH SPRINGLINES
S-8A	16'CE'+31.78	RT-9.62	H INLET	949.83	945.33	4.50	W/ R-3067-7004-V
S-9	15'CE'+31.90	LT-9.20	6X3 SAS	951.43	943.68	7.75	W/ R-3067-7004-V
S-9A	15'CE'+16.75	LT-9.00	3X3 SAS	952.14	946.84	5.30	W/ R-3067-7004-V; (2)
S-10	14'CE'+27.10	LT-9.50	6X3 SAS	954.16	946.30	7.86	LP; W/ R-3067-7004-V
S-10A	14'CE'+27.10	RT-9.50	H INLET	954.16	950.53	3.63	LP; W/ R-3067-7004-V
S-10B	14'CE'+22.68	RT-9.50	H INLET	954.81	951.41	3.40	W/ R-3067-7004-V
S-10C	14'CW'+21.00	LT-9.32	H INLET	955.11	951.55	3.56	W/ R-3067-7004-V
S-11	11'CW'+13.00	LT-9.50	6X3 SAS	965.37	957.40	7.97	W/ R-3067-7004-V
S-12	10'CE'+48.00	LT-30.62	TAP	-	962.23	-	TAP EX CB 3763-006
S-16	39'CE'+74.00	RT-16.00	3X3 SAS	893.74	884.89	8.85	W/ R-3067-7004-V; (4)
S-17	39'CE'+80.00	LT-41.27	TAP	-	885.74	-	TAP EX AS 3961-043
S-18	40'CE'+09.00	RT-16.00	H INLET	893.58	890.26	3.32	LP; W/ R-3067-7004-V
S-19	40'CE'+22.70	RT-16.00	H INLET	893.73	890.33	3.40	W/ R-3067-7004-V
* S-20	44'CE'+40.93	RT-51.79	**6X3 SAS**	878.21	874.72	3.49	**FP; W/ OPEN GRATE**
S-21	44'CE'+53.67	RT-18.00	TERRACE INLET TYPE III	887.97	874.89	13.08	PER SDD 5.7.12B
S-22	44'CE'+48.00	LT-27.90	H INLET	889.93	885.03	4.90	FP; W/ R-3067-7004-V; (3)
S-23	44'CE'+49.00	LT-40.70	H INLET	890.83	886.23	4.60	FP; W/ R-3067-7004-V
S-24	44'CE'+25.30	LT-46.60	H INLET	892.40	889.00	3.40	W/ R-3067-7004-V
S-25	43'CE'+94.00	LT-21.00	H INLET	890.43	887.03	3.40	W/ R-3067-7004-V
S-26	44'CE'+80.000	LT-16.00	H INLET	887.18	883.78	3.40	W/ R-3067-7004-V

PIPES

PIPE NO.	FROM (DNSTM)	TO (UPSTM)	LGTH (FT)	DISCH. E.I.	INLET E.I.	SLOPE (%)	PIPE SIZE	TYPE	NOTES
P-0	S-0	S-1	14	938.80	938.87	0.50%	54"	RCP	-
P-1	S-1	S-2	58	939.75	940.04	0.51%	24"	RCP	NCM
P-2	S-2	S-2A	40	940.04	940.99	2.38%	24"	RCP	-
P-2A	S-2A	S-2B	28	941.74	942.78	3.71%	15"	RCP	-
P-2B	S-2	S-2C	45	941.04	943.28	4.98%	12"	RCP	-
P-3	S-2	S-3	77	940.04	941.30	1.64%	24"	RCP	-
P-3A	S-3	S-3A	22	941.30	943.17	8.50%	24"	RCP	-
P-4	S-3	S-4	31	942.30	943.44	3.68%	12"	RCP	-
P-5	S-4	S-5	44	943.44	943.98	1.23%	12"	RCP	-
P-6	S-1	S-6	61	938.87	939.18	0.50%	54"	RCP	-
P-7	S-6	S-7	128	939.18	940.06	0.69%	54"	RCP	-
P-8	S-7	S-9	207	940.06	943.68	1.75%	54"	RCP	-
P-8A	S-8	S-8A	14	943.69	945.33	11.71%	12"	RCP	-
P-9	S-9	S-10	105	943.68	946.30	2.50%	54"	RCP	-
P-9A	S-9	S-9A	22	945.68	946.84	5.27%	30"	RCP	-
P-10	S-10	S-11	315	946.30	957.40	3.52%	54"	RCP	-
P-10A	S-10	S-10A	15	949.80	950.53	4.87%	12"	RCP	NCM
P-10B	S-10	S-10B	45	949.80	951.41	3.58%	12"	RCP	-
P-10C	S-10B	S-10C	18	951.41	951.55	0.78%	12"	RCP	-
P-11	S-11	S-12	69	957.40	962.23	7.00%	54"	RCP	-
P-16	S-16	S-17	57	884.89	885.74	1.49%	24"	RCP	-
P-17	S-16	S-18	34	890.09	890.26	0.50%	12"	RCP	-
P-18	S-18	S-19	13	890.26	890.33	0.54%	12"	RCP	-
P-20	S-20	S-21	34	874.72	874.89	0.50%	27"	RCP	-
P-21	S-21	S-22	45	881.59	885.03	7.64%	24"	RCP	-
P-22	S-22	S-23	13	885.28	886.23	7.31%	21"	RCP	-
P-23	S-23	S-24	25	886.98	889.00	8.08%	12"	RCP	-
P-24	S-21	S-25	63	882.59	887.03	7.05%	12"	RCP	-
P-25	S-21	S-26	48	882.59	883.78	2.48%	12"	RCP	-

ULO SCHEDULE

ID NO.	STATION	LOCATION (OFFSET)	TYPE	NOTES
ULO-1	14'CE'95.47.00	LT-6.50	WATER	-
ULO-2	15'CE'55.28	LT-6.20	GAS	-
ULO-3	18'CE'+59.00	LT-2.70	GAS	-
ULO-4	18'CW'+46.00	LT-3.00	GAS	-
ULO-5	18'CW'+46.00	LT-36.16	GAS	-
ULO-6	44'CW'+47.50	LT-27.88	GAS	-
ULO-7	44'CE'+40.93	RT-51.79	STORM	CONFIRM ELEVATION

SPECIFIC NOTES

(1) RECONNECT EXISTING 15" VP PIPE ON NORTH
(2) RECONNECT EXISTING 30" PIPE
(3) RECONNECT EXISTING 12" PIPE
(4) RECONNECT EXISTING 18" PIPE

STANDARD NOTES:

- ABBREVIATIONS: AE = APRON ENDWALL; RCP = REINFORCED CONCRETE PIPE; HERCP = HORIZONTAL ELLIPTICAL REINFORCED CONCRETE PIPE; DNA = DOES NOT APPLY; SAS = SEWER ACCESS STRUCTURE; LP = LOW POINT INLET STRUCTURE; FP = FIELD POURED STRUCTURE; TR = TOP OF CONCRETE ROOF; NCM = NO CROWN MATCH FOR PIPES
- APPROXIMATE DISCHARGE E.I. GIVEN, ADJUST E.I. AND PIPE SLOPE IN THE FIELD.
- TOP OF CASTING GRADE GIVEN IS THE TOP OF CURB FOR INLET STRUCTURES AND THE FLOWLINE OF THE CLOSED CASTING FOR SAS's.
- TOP OF CONCRETE ROOF (TR) IS 1.25' BELOW TOP OF CASTING UNLESS OTHERWISE NOTED.
- ALL REINFORCED CONCRETE PIPES TO BE CLASS III UNLESS OTHERWISE NOTED.
- SURVEYOR TO CONFIRM THAT ALL INLET STATION / OFFSETS LINE UP WITH PROPOSED CURB AND GUTTER.
- ALL STRUCTURES CALLED OUT AS FIELD POURED SHALL BE FIELD POURED. ALL OTHER STRUCTURES (NOT INDICATED AS FIELD POURED) SHALL BE SUBMITTED TO CITY ENGINEERING FOR APPROVAL IF PRECAST STRUCTURES ARE PREFERRED. CONTACT ELIA E. ACOSTA OF CITY ENGINEERING AT (608) 266-4096 FOR PRECAST APPROVALS, OR FAX SHOP DRAWINGS TO (608)264-9275.

ALIGNMENT CODES:
'CE'= CHEROKEE DR EAST BOUND
'CW'= CHEROKEE DR WEST BOUND

CHEROKEE DR PROJECT NO. 53W1553	SHEET NO. U-10
STORM REMOVALS SCHEDULE	CITY OF MADISON

STORM REMOVALS SCHEDULE

STORM STRUCTURE REMOVALS

STRUC. NO.	ID NO.	STATION	LOCATION (OFFSET)	TYPE	NOTES:
RI-1	IN 3863-017	17'CE'+22.00	RT-10.00	H INLET	-
RI-2	IN 3863-016	17'CE'+48.00	RT-16.33	H INLET	-
RI-3	IN 3863-015	17'CE'+60.00	LT-11.20	H INLET	-
RI-4	IN 3863-014	17'CW'+46.60	RT-13.48	H INLET	-
RI-5	IN 3863-018	17'CW'+37.39	LT-14.60	H INLET	-
RI-6	IN 3863-013	17'CW'+78.24	LT-24.44	H INLET	-
RS-1	AS 3863-009	18'CW'+23.73	LT-9.72	5X7 STRUCTURE	-
RI-10	IN 3961-045	43'CE'+94.00	LT-21.00	H INLET	-
RI-11	IN 3961-046	44'CE'+48.00	LT-27.90	H INLET	-

STORM PIPE REMOVALS

PIPE REMOVAL NO.	REMOVE FROM	REMOVE TO	LENGTH (FT)	PAID (Y/N)	SIZE	TYPE	NOTES
RP-1	S-9	S-9A	22	N	30"	ARCH	-
RP-2	R1-1	AB-2	49	Y	12"	VP	-
RP-3	RI-2	RI-3	28	N	12"	VP	-
RP-4	AB-2	RI-3	11	N	12"	VP	-
RP-5	AB-2	RI-4	29	N	12"	VP	-
RP-6	AB-2	RI-5	59	Y	12"	VP	-
RP-7	RI-6	RS-1	44	Y	24"	CMP	-
RP-8	RS-1	S-2A	45	Y	36"	ARCH	-
RP-9	RS-1	STA 18'CW'+59.00 RT-2.00	36	N	24"	CMP	-
RP-10	STA 17'CE'+88.00 LT-28.00	STA 18'CE'+61.50 LT-29.00	66	Y	36"	ARCH	TWIN ARCH PIPES
RP-11	STA 18'CW'+80.00 RT-9.40	PIPE END	34	Y	24"	CMP	-
RP-11A	STA 19'CE'+00.00 LT-26.00	PIPE END	35	Y	36"	ARCH	TWIN ARCH PIPES
RP-16	S-16	S-17	57	N	18"	VP	-
RP-20	S-25	S-22	52	Y	12"	RCP	-
RP-21	S-22	S-20	71	N	12"	RCP	-

STORM STRUCTURE ABANDONMENT

STRUC. NO.	ID NO.	STATION	LOCATION (OFFSET)	TYPE	NOTES:
AB-1	AS 3763-029	15'CE'+50.00	LT-29.60	5X7 CB	-
AB-2	AS3863-007	17'CE'+60.00	LT-21.42	5X7 CB	-

STORM PIPE ABANDONMENT

PIPE ABANDONMENT NO.	ABANDON FROM	ABANDON TO	LENGTH (FT)	PAID (Y/N)	# OF PLUGS PAID	SIZE	TYPE	NOTES
ABP-1	EX CB 3763-006	AB-1	496	Y - PLUGS	6	43"X28"	ARCH	TWIN ARCH PIPES
ABP-2	AB-1	AB-2	207	Y - PLUGS	0	43"X28"	ARCH	TWIN ARCH PIPES
ABP-3	S-9	AB-1	25	Y - PLUGS	1	30"	ARCH	-
ABP-4	AB-2	STA 17'CE'+85.00 LT-27.50	23	Y - PLUGS	2	36"	ARCH	TWIN ARCH PIPES
ABP-5	S-3A	RI-6	39	Y - PLUGS	2	24"	CMP	-
ABP-6	STA 18'CE'+61.57 LT-29.00	STA 19'CE'+00.00 LT-26.00	36	Y - PLUGS	4	36"	ARCH	TWIN ARCH PIPES

PLOT SCALE: _ _ _
PLOT NAME: _ _ _
REV. DATE: _ _ _
ORIGINATOR: CITY OF MADISON STREETS DIVISION

FILE NAME: M:\DESIGN\PROJECTS\53W1553\STORM\DESIGN\REMOVALS STORM SCHEDULE.XLS

PROJECT NO. 53W1553
CHEROKEE DR UTILITIES W/RES

SHEET NO. W-1

WATER PLAN AND PROFILE

E.B. CHEROKEE — CITY OF MADISON

PM: DENNIS CAWLEY — DESIGNER: PEH

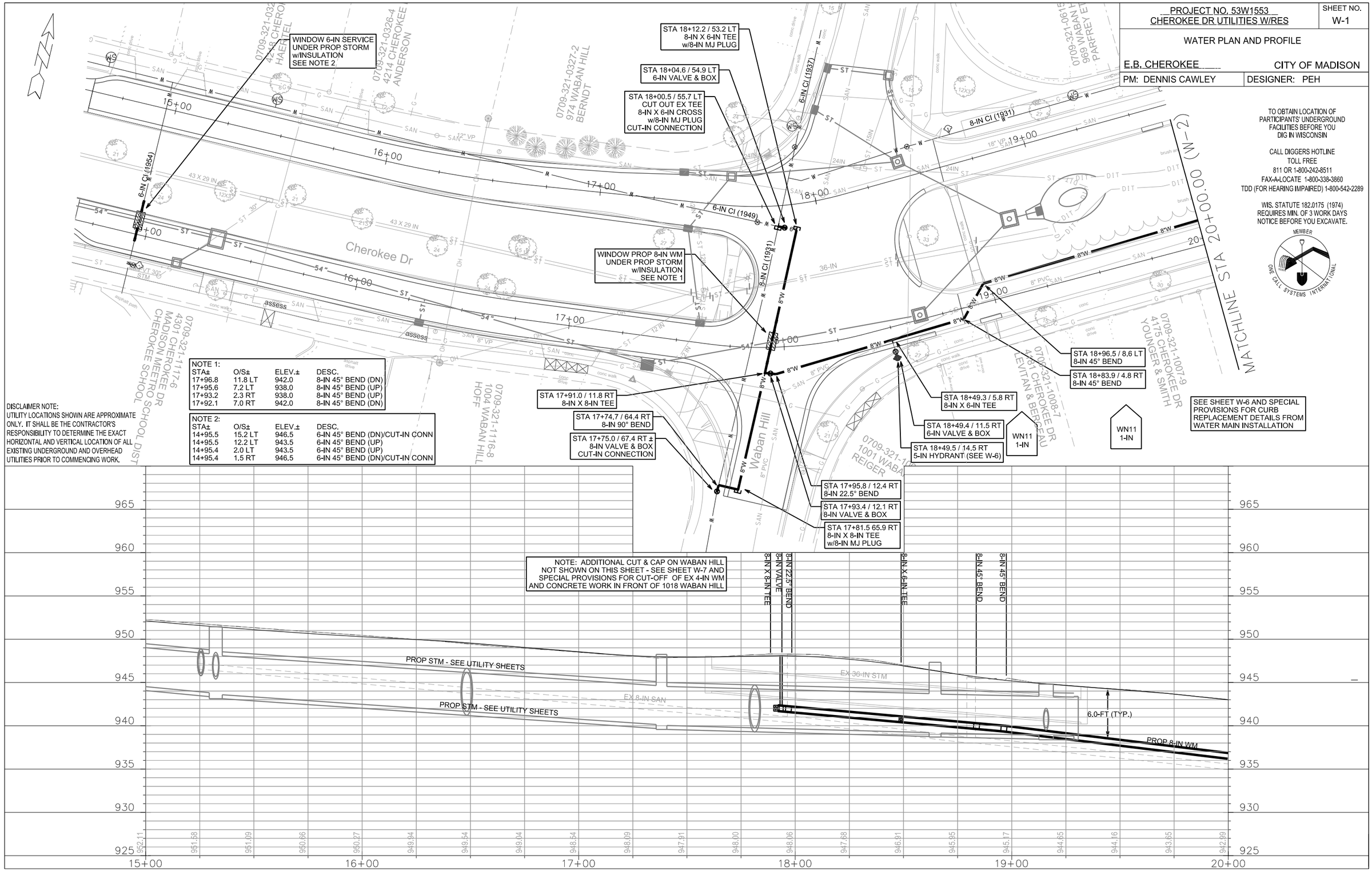

NOTE 1:

STA±	O/S±	ELEV.±	DESC.
17+96.8	11.8 LT	942.0	8-IN 45° BEND (DN)
17+95.6	7.2 LT	938.0	8-IN 45° BEND (UP)
17+93.2	2.3 RT	938.0	8-IN 45° BEND (UP)
17+92.1	7.0 RT	942.0	8-IN 45° BEND (DN)

NOTE 2:

STA±	O/S±	ELEV.±	DESC.
14+95.5	15.2 LT	946.5	6-IN 45° BEND (DN)/CUT-IN CONN
14+95.5	12.2 LT	943.5	6-IN 45° BEND (UP)
14+95.4	2.0 LT	943.5	6-IN 45° BEND (UP)
14+95.4	1.5 RT	946.5	6-IN 45° BEND (DN)/CUT-IN CONN

DISCLAIMER NOTE:
UTILITY LOCATIONS SHOWN ARE APPROXIMATE ONLY. IT SHALL BE THE CONTRACTOR'S RESPONSIBILITY TO DETERMINE THE EXACT HORIZONTAL AND VERTICAL LOCATION OF ALL EXISTING UNDERGROUND AND OVERHEAD UTILITIES PRIOR TO COMMENCING WORK.

TO OBTAIN LOCATION OF PARTICIPANTS' UNDERGROUND FACILITIES BEFORE YOU DIG IN WISCONSIN

CALL DIGGERS HOTLINE
TOLL FREE
811 OR 1-800-242-8511
FAX-A-LOCATE 1-800-338-3860
TDD (FOR HEARING IMPAIRED) 1-800-542-2289

WIS. STATUTE 182.0175 (1974) REQUIRES MIN. OF 3 WORK DAYS NOTICE BEFORE YOU EXCAVATE.

MEMBER ONE CALL SYSTEMS INTERNATIONAL

PLOT SCALE: ____
PLOT NAME: ____
REV. DATE: ____
ORIGINATOR: CITY OF MADISON, STREETS DIVISION

FILE NAME: M:\DESIGN\Projects\53W1553\Water\Design\53W1553-CherokeeWU-PnP 1.dgn

DATE: 2/28/2013

PROJECT NO. 53W1553 CHEROKEE DR UTILITIES W/RES	SHEET NO. W-2
WATER PLAN AND PROFILE	
E.B. CHEROKEE	CITY OF MADISON
PM: DENNIS CAWLEY	DESIGNER: PEH

DISCLAIMER NOTE:
UTILITY LOCATIONS SHOWN ARE APPROXIMATE ONLY. IT SHALL BE THE CONTRACTOR'S RESPONSIBILITY TO DETERMINE THE EXACT HORIZONTAL AND VERTICAL LOCATION OF ALL EXISTING UNDERGROUND AND OVERHEAD UTILITIES PRIOR TO COMMENCING WORK.

TO OBTAIN LOCATION OF PARTICIPANTS' UNDERGROUND FACILITIES BEFORE YOU DIG IN WISCONSIN

CALL DIGGERS HOTLINE
TOLL FREE
811 OR 1-800-242-8511
FAX-A-LOCATE 1-800-338-3860
TDD (FOR HEARING IMPAIRED) 1-800-542-2289

WIS. STATUTE 182.0175 (1974)
REQUIRES MIN. OF 3 WORK DAYS
NOTICE BEFORE YOU EXCAVATE.

MEMBER ONE CALL SYSTEMS INTERNATIONAL

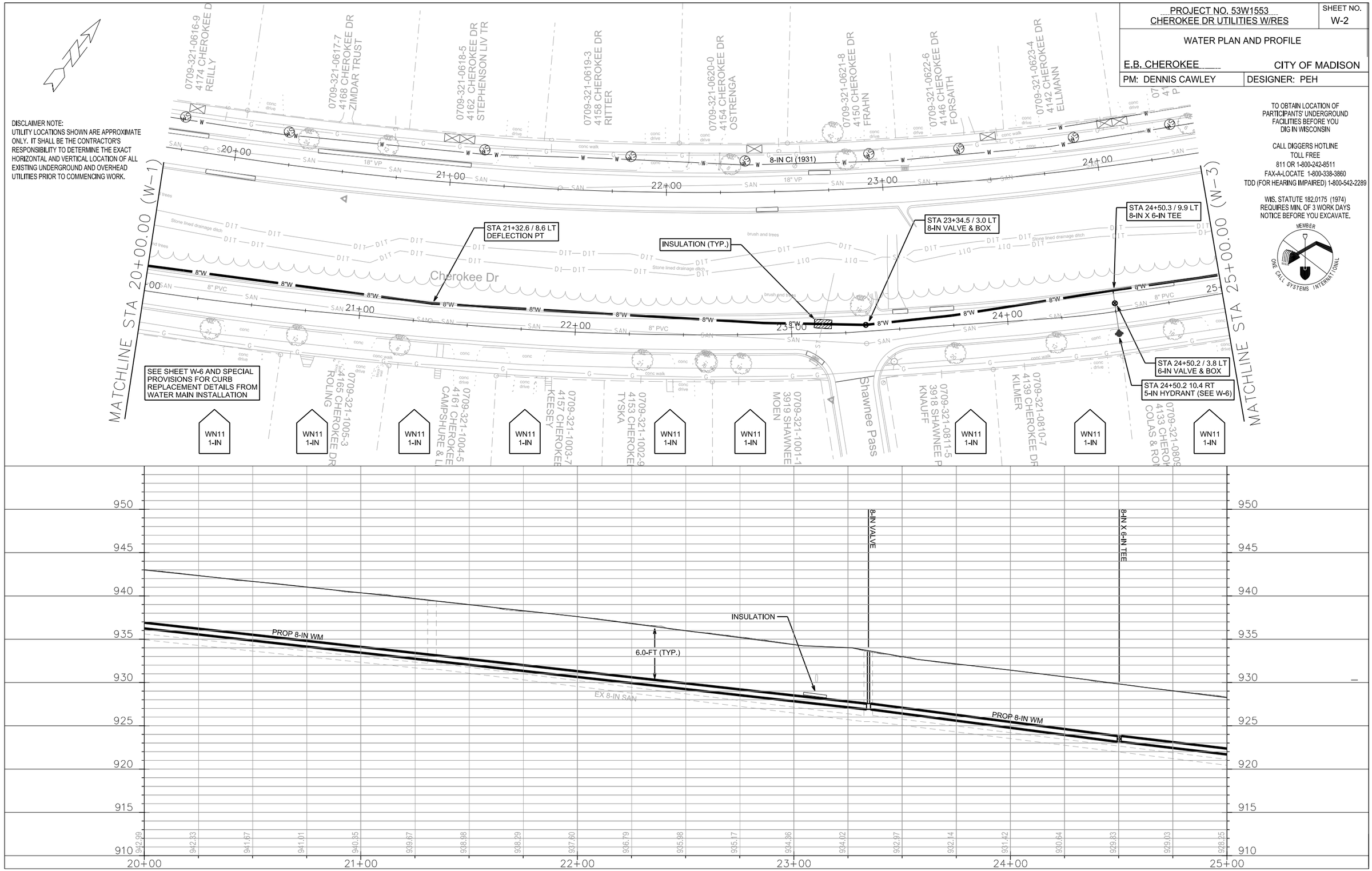

PLOT SCALE: ____
PLOT NAME: ____
REV. DATE: ____
ORIGINATOR: CITY OF MADISON, STREETS DIVISION

FILE NAME: M:\DESIGN\Projects\53W1553\Water\Design\53W1553-CherokeeWU-PnP 2.dgn

DATE: 2/27/2013

PROJECT NO 53W1553
CHEROKEE DR UTILITIES W/RES

SHEET NO. W-3

WATER PLAN AND PROFILE

E.B. CHEROKEE — CITY OF MADISON

PM: DENNIS CAWLEY — DESIGNER: PEH

DISCLAIMER NOTE:
UTILITY LOCATIONS SHOWN ARE APPROXIMATE ONLY. IT SHALL BE THE CONTRACTOR'S RESPONSIBILITY TO DETERMINE THE EXACT HORIZONTAL AND VERTICAL LOCATION OF ALL EXISTING UNDERGROUND AND OVERHEAD UTILITIES PRIOR TO COMMENCING WORK.

TO OBTAIN LOCATION OF PARTICIPANTS' UNDERGROUND FACILITIES BEFORE YOU DIG IN WISCONSIN

CALL DIGGERS HOTLINE
TOLL FREE
811 OR 1-800-242-8511
FAX-A-LOCATE 1-800-338-3860
TDD (FOR HEARING IMPAIRED) 1-800-542-2289

WIS. STATUTE 182.0175 (1974) REQUIRES MIN. OF 3 WORK DAYS NOTICE BEFORE YOU EXCAVATE.

MEMBER ONE CALL SYSTEMS INTERNATIONAL

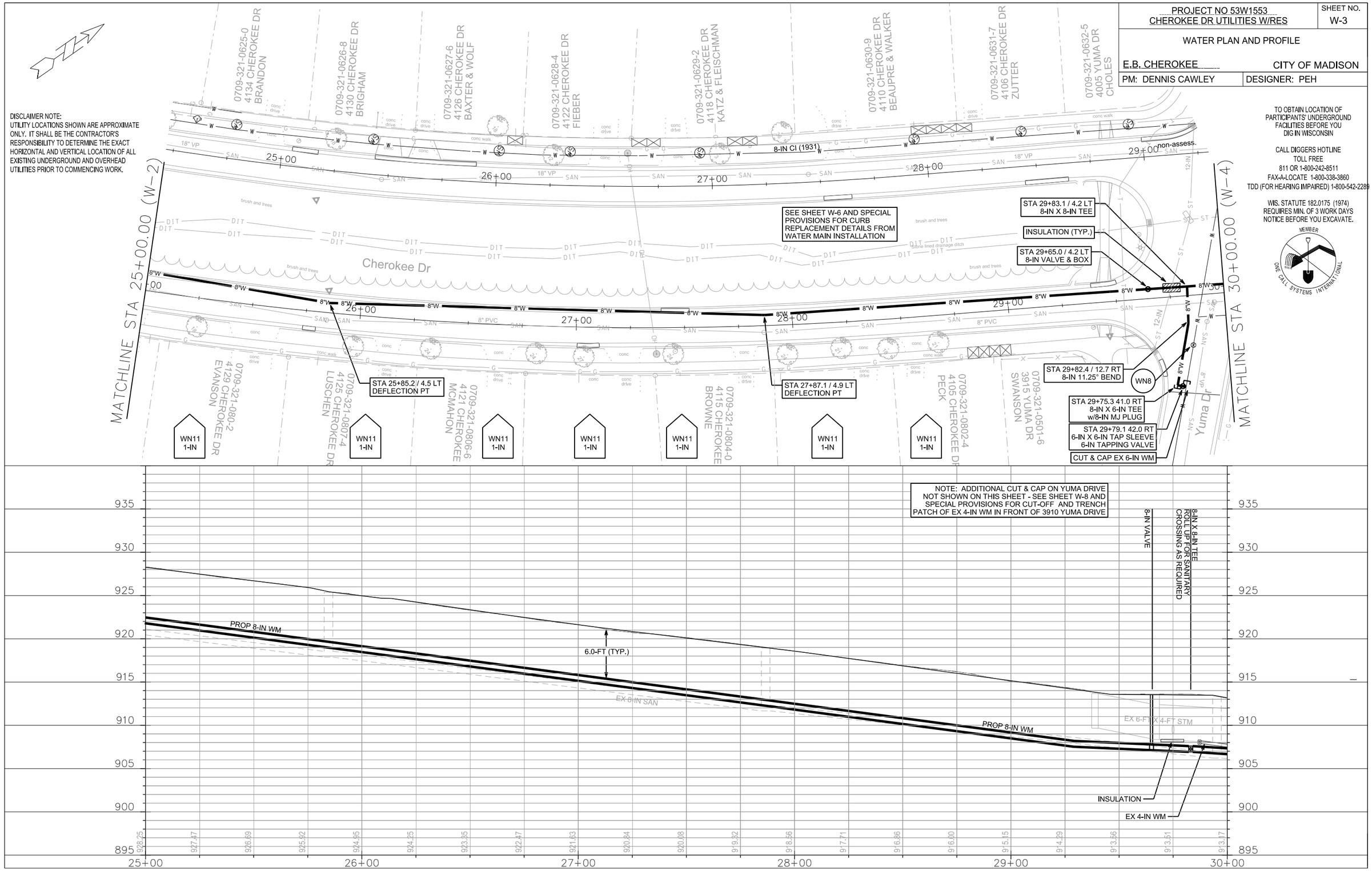

FILE NAME: M:\DESIGN\Projects\53W1553\Water\Design\53W1553-CherokeeWU-PnP 3.dgn

DATE: 2/27/2013

PLOT SCALE: ____
PLOT NAME: ____
REV. DATE: ____
ORIGINATOR: CITY OF MADISON, STREETS DIVISION

PROJECT NO. 53W1553
CHEROKEE DR UTILITIES W/RES

SHEET NO. W-4

WATER PLAN AND PROFILE

E.B. CHEROKEE — CITY OF MADISON

PM: DENNIS CAWLEY — DESIGNER: PEH

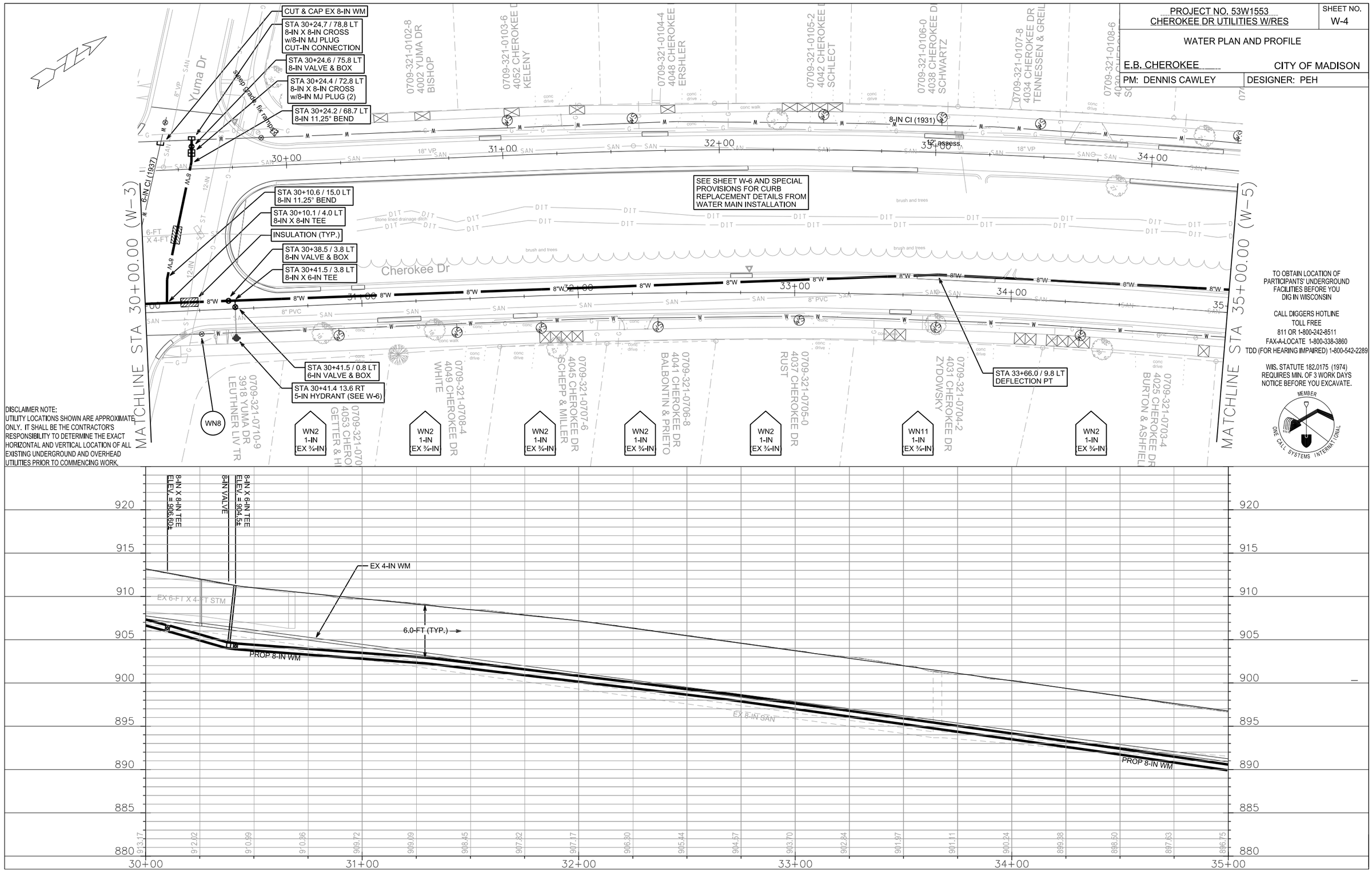

DISCLAIMER NOTE:
UTILITY LOCATIONS SHOWN ARE APPROXIMATE ONLY. IT SHALL BE THE CONTRACTOR'S RESPONSIBILITY TO DETERMINE THE EXACT HORIZONTAL AND VERTICAL LOCATION OF ALL EXISTING UNDERGROUND AND OVERHEAD UTILITIES PRIOR TO COMMENCING WORK.

TO OBTAIN LOCATION OF PARTICIPANTS' UNDERGROUND FACILITIES BEFORE YOU DIG IN WISCONSIN

CALL DIGGERS HOTLINE
TOLL FREE
811 OR 1-800-242-8511
FAX-A-LOCATE 1-800-338-3860
TDD (FOR HEARING IMPAIRED) 1-800-542-2289

WIS. STATUTE 182.0175 (1974) REQUIRES MIN. OF 3 WORK DAYS NOTICE BEFORE YOU EXCAVATE.

MEMBER ONE CALL SYSTEMS INTERNATIONAL

PLOT SCALE: ____
PLOT NAME: ____
REV. DATE: ____
ORIGINATOR: CITY OF MADISON, STREETS DIVISION

FILE NAME: M:\DESIGN\Projects\53W1553\Water\Design\53W1553-CherokeeWU-PnP 4.dgn

DATE: 2/27/2013

PROJECT NO. 53W1553 CHEROKEE DR UTILITIES W/RES	SHEET NO. W-5
WATER PLAN AND PROFILE	
E.B. CHEROKEE	CITY OF MADISON
PM: DENNIS CAWLEY	DESIGNER: PEH

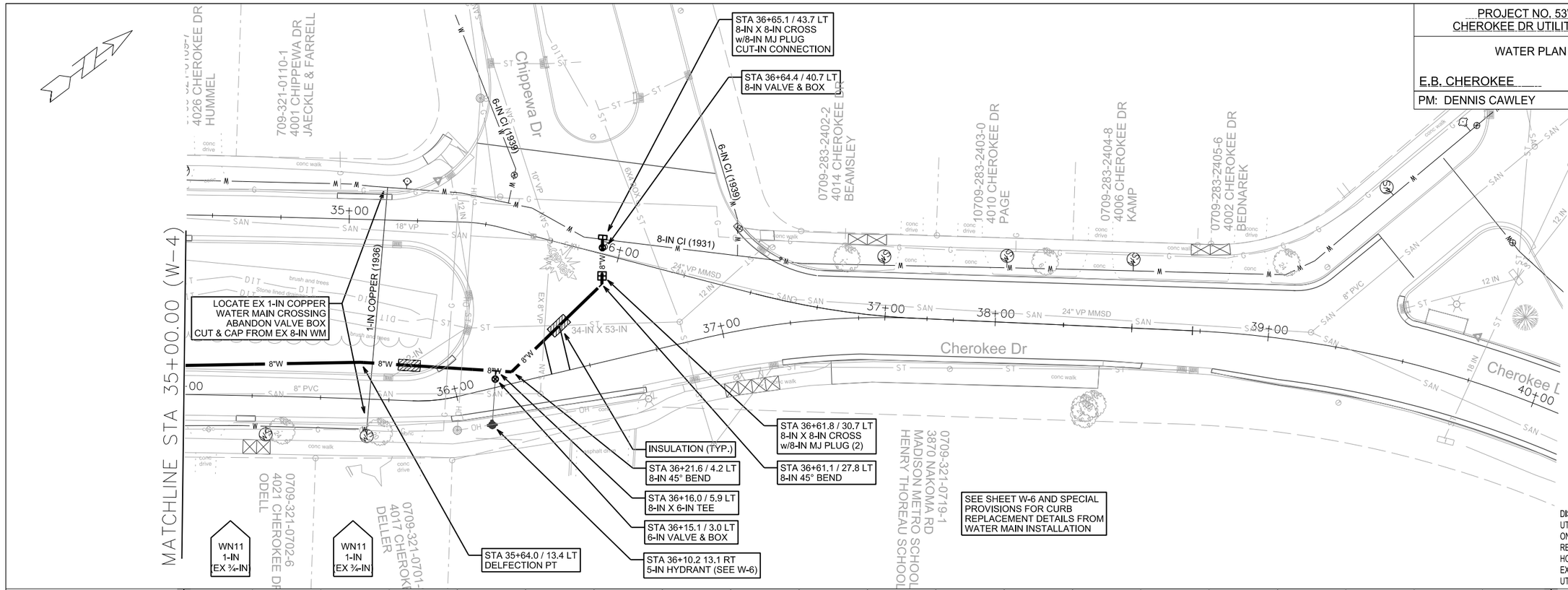

TO OBTAIN LOCATION OF PARTICIPANTS' UNDERGROUND FACILITIES BEFORE YOU DIG IN WISCONSIN

CALL DIGGERS HOTLINE
TOLL FREE
811 OR 1-800-242-8511
FAX-A-LOCATE 1-800-338-3860
TDD (FOR HEARING IMPAIRED) 1-800-542-2289

WIS. STATUTE 182.0175 (1974) REQUIRES MIN. OF 3 WORK DAYS NOTICE BEFORE YOU EXCAVATE.

MEMBER ONE CALL SYSTEMS INTERNATIONAL

DISCLAIMER NOTE:
UTILITY LOCATIONS SHOWN ARE APPROXIMATE ONLY. IT SHALL BE THE CONTRACTOR'S RESPONSIBILITY TO DETERMINE THE EXACT HORIZONTAL AND VERTICAL LOCATION OF ALL EXISTING UNDERGROUND AND OVERHEAD UTILITIES PRIOR TO COMMENCING WORK.

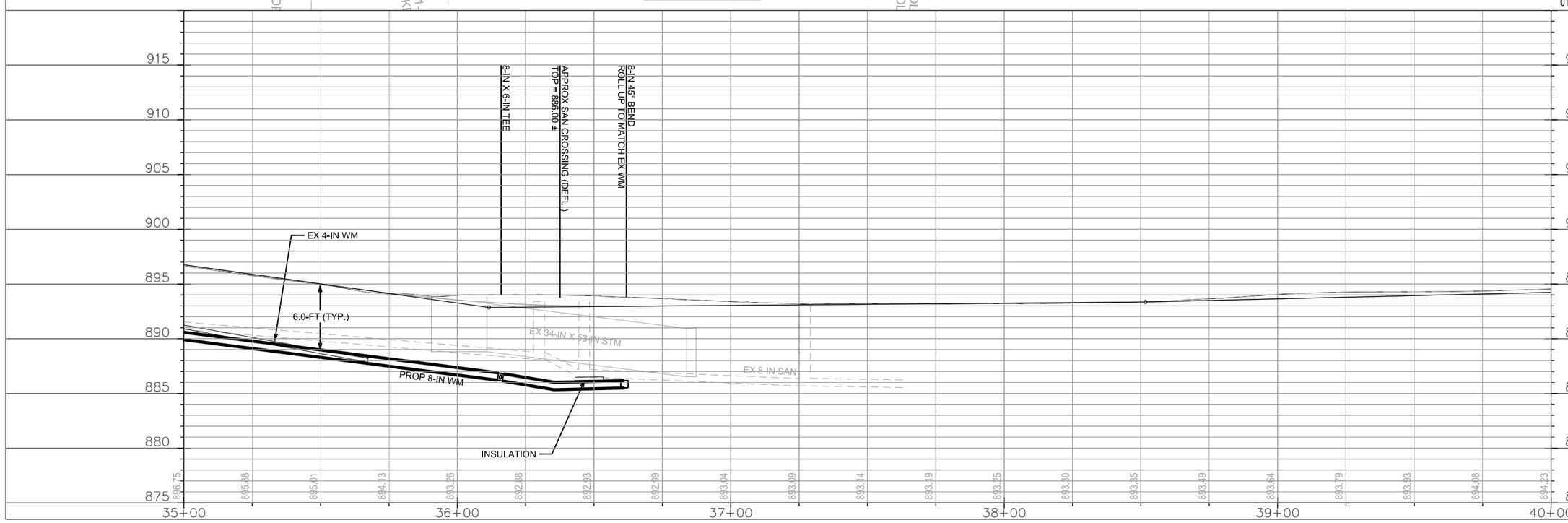

FILE NAME: M:\DESIGN\Projects\53W1553\Water\Design\53W1553-CherokeeWU-PnP 5.dgn

DATE: 2/27/2013

PLOT SCALE: ____
PLOT NAME: ____
REV. DATE: ____
ORIGINATOR: CITY OF MADISON, STREETS DIVISION

CHEROKEE DR UTILITIES W/RES PROJECT NO. 53W1553	SHEET NO. W-6
WATER ESTIMATE OF MATERIALS CITY OF MADISON	
PM: DENNIS CAWLEY	DESIGNER: PEH

CONSTRUCTION NOTES:

1. CONSTRUCT NEW WATER MAIN 6.0' BELOW FINISHED GRADE, UNLESS OTHERWISE NOTED. INSULATE MAIN WITH POLYSTYRENE BOARD AT UTILITY CROSSINGS OR OTHER AREAS IDENTIFIED BY ENGINEER AS HAVING INADEQUATE COVER.
2. VERIFY SIZE OF EXISTING WATER SERVICES AND RECONNECT SERVICES AS INDICATED.
3. MINIMIZE DISTRUPTION OF SERVICE TO EXISTING CUSTOMERS. NOTIFY PER CONTRACT REQUIREMENTS OF ANY PLANNED WATER OUTAGE.
4. EXISTING WATER MAIN SHALL REMAIN IN SERVICE UNTIL NEW WATER MAIN IS TESTED AND ACCEPTED BY MADISON WATER UTILITY AND ALL SERVICES ARE RECONNECTED.
5. THE EXISTING UTILITIES SHOWN ON THIS PLAN REPRESENT THE BEST INFORMATION AVAILABLE TO THE WATER UTILITY AT THE TIME OF PLAN PREPARATION. CONTRACTOR IS RESPONSIBLE FOR HAVING EACH UTILITY LOCATED PRIOR TO COMMENCING WORK.

WN1 - REPLACE THE EXISTING LEAD SERVICE WITH A NEW COPPER SERVICE.

WN2 - EXTEND AND RECONNECT THE EXISTING COPPER SERVICE TO THE NEW WATER MAIN (OR TO THE LARGER PARALLEL EXISTING MAIN).

WN3 - EXISTING SERVICE TO BE ABANDONED WHEN THE WATER MAIN IS CUT OFF.

WN4 - DISCONNECT FROM THE OLD WATER MAIN AND RECONNECT THE EXISTING COPPER WATER SERVICE LATERAL TO THE NEW WATER MAIN (OR TO THE LARGER PARALLEL EXISTING MAIN).

WN5 - RELOCATE THE EXISTING FIRE HYDRANT.

WN6 - ABANDON WATER VALVE ACCESS STRUCTURE.

WN7 - FURNISH AND INSTALL THE NEW TOP SECTION FOR THE WATER ACCESS STRUCTURE.

WN8 - ABANDON THE VALVE BOX.

WN9 - FURNISH THE DITCH, COMPACTION, AND ALL MATERIALS AND LABOR FOR THE INSTALLATION OF NEW SERVICE LATERAL.

WN10 - REMOVE AND SALVAGE EXISTING HYDRANT

WN11 - REPLACE THE EXISTING COPPER SERVICE WITH A COPPER SERVICE

ESTIMATE OF MATERIALS SUPPLIED BY CONTRACTOR:

** ESTIMATE OF MATERIALS IS FOR INFORMATION ONLY. ENGINEER DOES NOT GUARANTEE ACCURACY OF MATERIAL TAKE-OFF.*

80' - 6" PIPE
2180' - 8" PIPE

2500' - POLYWRAP

5 - 6" VALVE & BOX
7 - 8" VALVE & BOX

6 - 8"X6" TEE
4 - 8"X8" TEE

1 - 8"X6" CROSS
4 - 8"X8" CROSS
4 - 6" 45° BEND
3 - 8" 11.25° BEND
1 - 8" 22.5° BEND
8 - 8" 45° BEND
1 - 8" 90° BEND

1 - 6" MJ CAP
1 - 8" MJ CAP
10 - 8" MJ PLUG

4 - 5-IN HYDRANT

80' - 2" STYROFOAM INSULATION

1" COPPER (AS R'QD)

MATERIALS SUPPLIED BY CITY:

1 - 6"X6" TAPPING SLEEVE
1 - 6" TAPPING VALVE

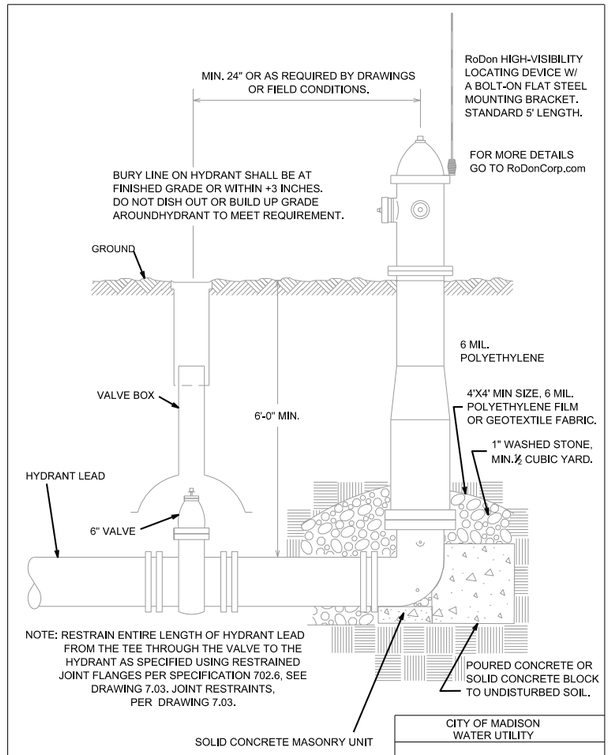

CURB MEDIAN GRADES (TYPE A) FOR RESTORATION AFTER WATER MAIN

STA	O/S (LT)	ELEV. (TC)	STA	O/S (LT)	ELEV. (TC)
19+00	9.47	945.50	31+75	8.74	908.25
19+25	9.66	944.95	32+00	8.78	907.52
19+50	10.01	944.45	32+25	8.99	906.68
19+75	10.40	943.89	32+50	9.15	905.84
20+00	10.78	943.33	32+75	9.30	904.96
20+25	10.77	942.74	33+00	9.61	904.07
20+50	10.46	942.02	33+25	9.90	903.18
20+75	10.09	941.31	33+50	9.91	902.36
21+00	9.70	940.63	33+75	9.69	901.51
21+25	9.53	940.02	34+00	SEE	BELOW
21+50	9.56	939.33	34+25	9.77	899.58
21+75	9.41	938.62	34+50	9.64	898.72
22+00	9.33	937.92	34+75	9.43	897.83
22+25	9.49	937.19	35+00	9.41	896.98
22+50	9.60	936.43	35+25	9.31	896.07
22+75	9.55	935.67	35+50	9.32	895.17
23+00	9.60	934.87	35+75	9.53	894.27
23+25	9.98	934.01	36+00	15.10	893.93
23+50	9.56	933.23			
23+75	9.59	932.47			
24+00	9.89	931.71			
24+25	10.68	930.91			
24+50	10.84	930.11			
24+75	10.02	929.29			
25+00	9.46	928.45			
25+25	9.56	927.63			
25+50	9.53	926.92			
25+75	9.39	926.18			
26+00	9.20	925.34			
26+25	9.14	924.52			
26+50	9.02	923.67			
26+75	9.04	922.76			
27+00	9.13	921.92			
27+25	9.27	921.19			
27+50	9.37	920.41			
27+75	9.64	919.57			
28+00	9.81	918.76			
28+25	9.86	917.91			
28+50	9.79	917.06			
28+75	9.76	916.33			
29+00	9.66	915.53			
29+25	9.54	914.68			
29+50	10.41	913.81			

DRAINAGE FLUME SIDES (~34+00):

33+95	9.56	900.74
33+95.8	9.88	900.63
33+98.5	12.98	900.35
34+01.9	13.84	900.18
34+01.2	11.62	900.20
34+01.4	10.42	900.23
34+02.8	9.81	900.28

PLOT SCALE: ____
PLOT NAME: ____
REV. DATE: ____
ORIGINATOR: CITY OF MADISON, STREETS DIVISION

FILE NAME: M:\DESIGN\Projects\53W1553\Water\Design\53W1553-CherokeeWU-Materials##.dgn

DATE: 2/21/2013

CHEROKEE DR UTILITIES W/RES PROJECT NO. 53W1553	SHEET NO. W-7
WATER IMPACT PLAN	
E.B. CHEROKEE DRIVE	CITY OF MADISON
PM: DENNIS CAWLEY	DESIGNER: PEH

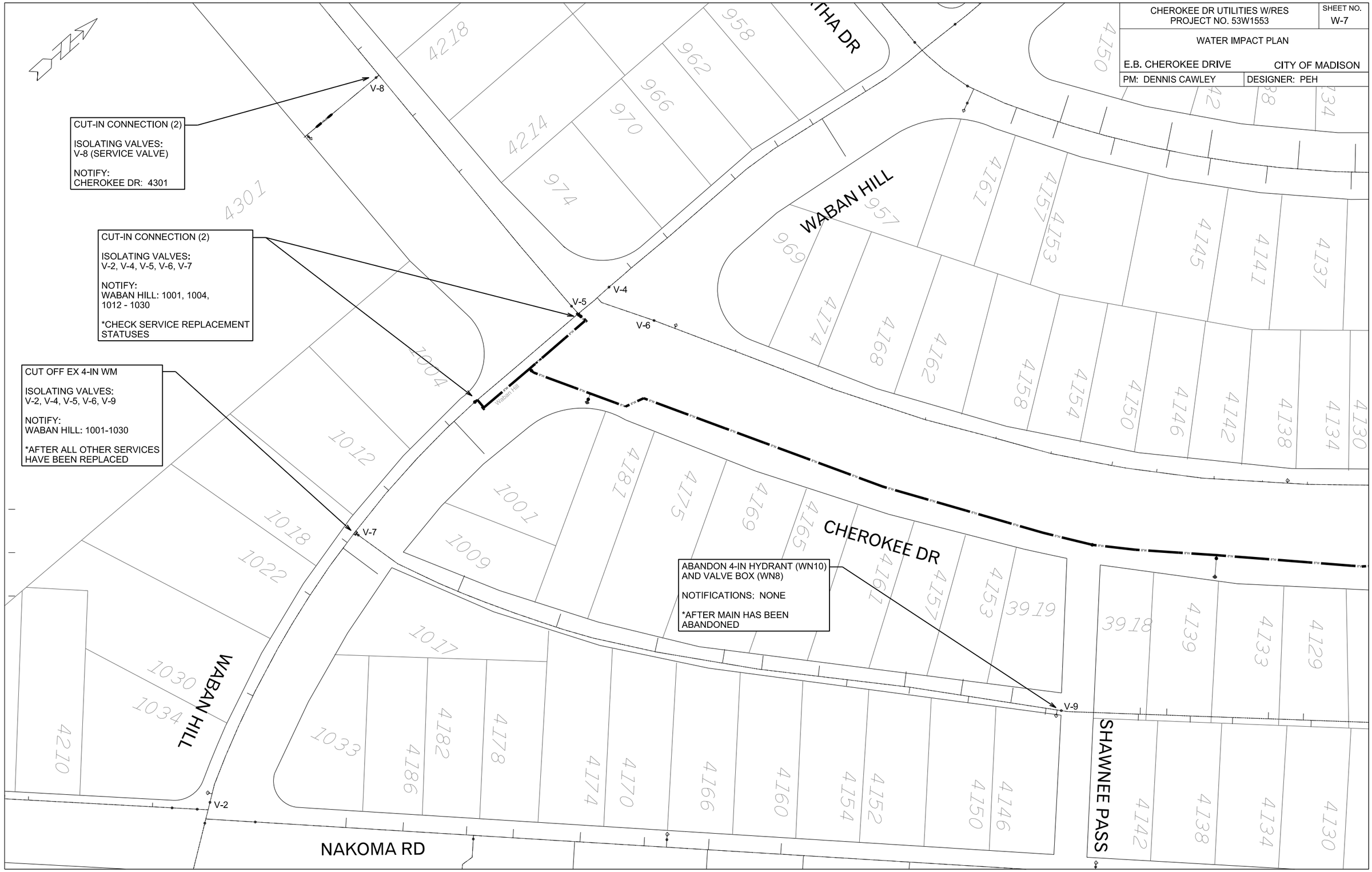

PLOT SCALE: ____
PLOT NAME: ____
REV. DATE: ____
ORIGINATOR: CITY OF MADISON, STREETS DIVISION

FILE NAME: M:\DESIGN\Projects\53W1553\Water\Design\53W1553-CherokeeWU-ImpactPN 1##.dgn

DATE: 2/21/2013

CHEROKEE DR UTILITIES W/RES PROJECT NO. 53W1553	SHEET NO. W-8
WATER IMPACT PLAN	
E.B. CHEROKEE DRIVE	CITY OF MADISON
PM: DENNIS CAWLEY	DESIGNER: PEH

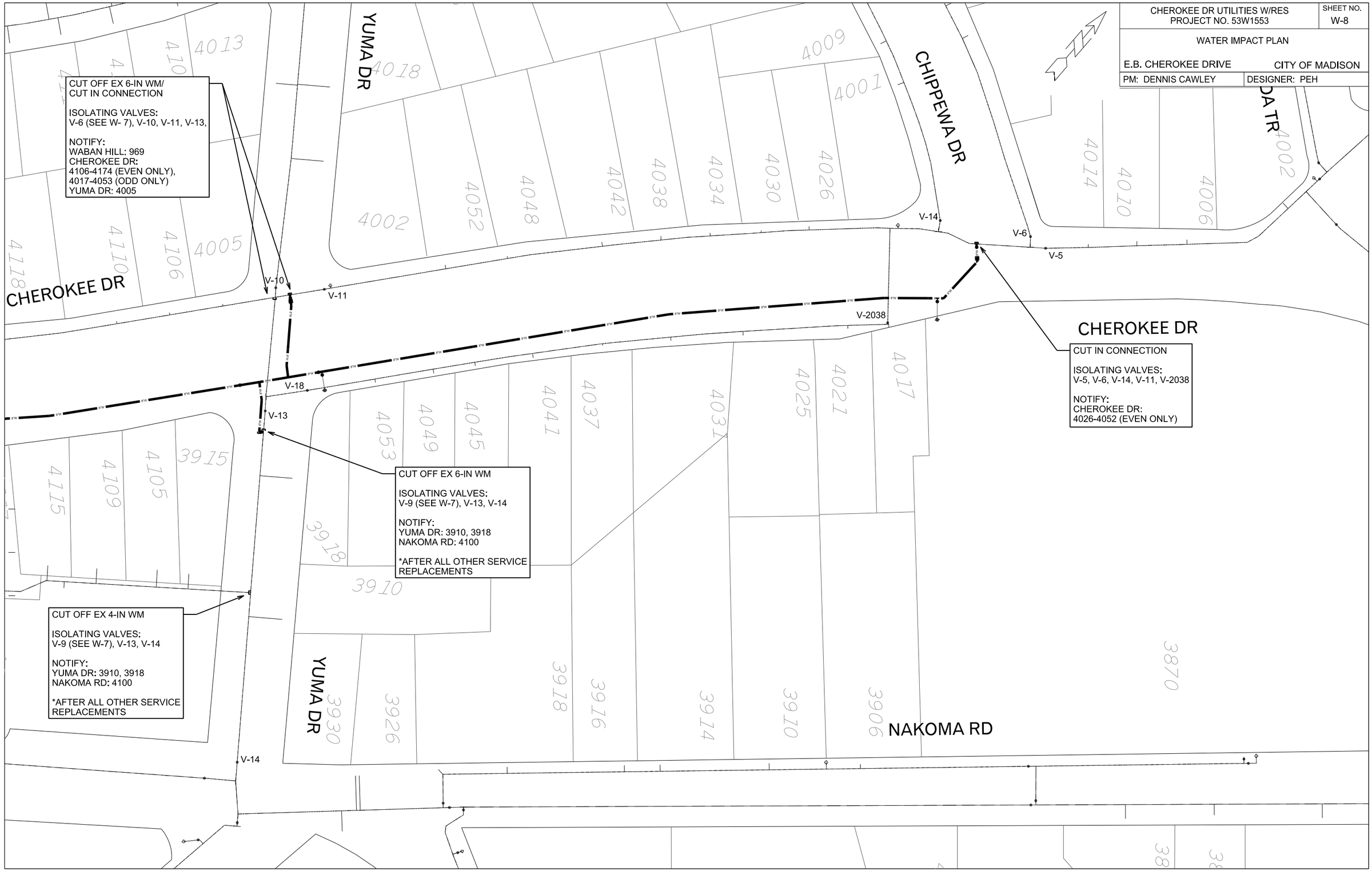

PLOT SCALE: ____
PLOT NAME: ____
REV. DATE: ____
ORIGINATOR: CITY OF MADISON, STREETS DIVISION

FILE NAME: M:\DESIGN\Projects\53W1553\Water\Design\53W1553-CherokeeWU-ImpactPN 2##.dgn

DATE: 2/21/2013

CHEROKEE DR UTILITIES W/RES PROJECT NO. 53W1553	SHEET NO. X-1
CROSS SECTIONS	
E.B. CHEROKEE DR 966	CITY OF MADISON

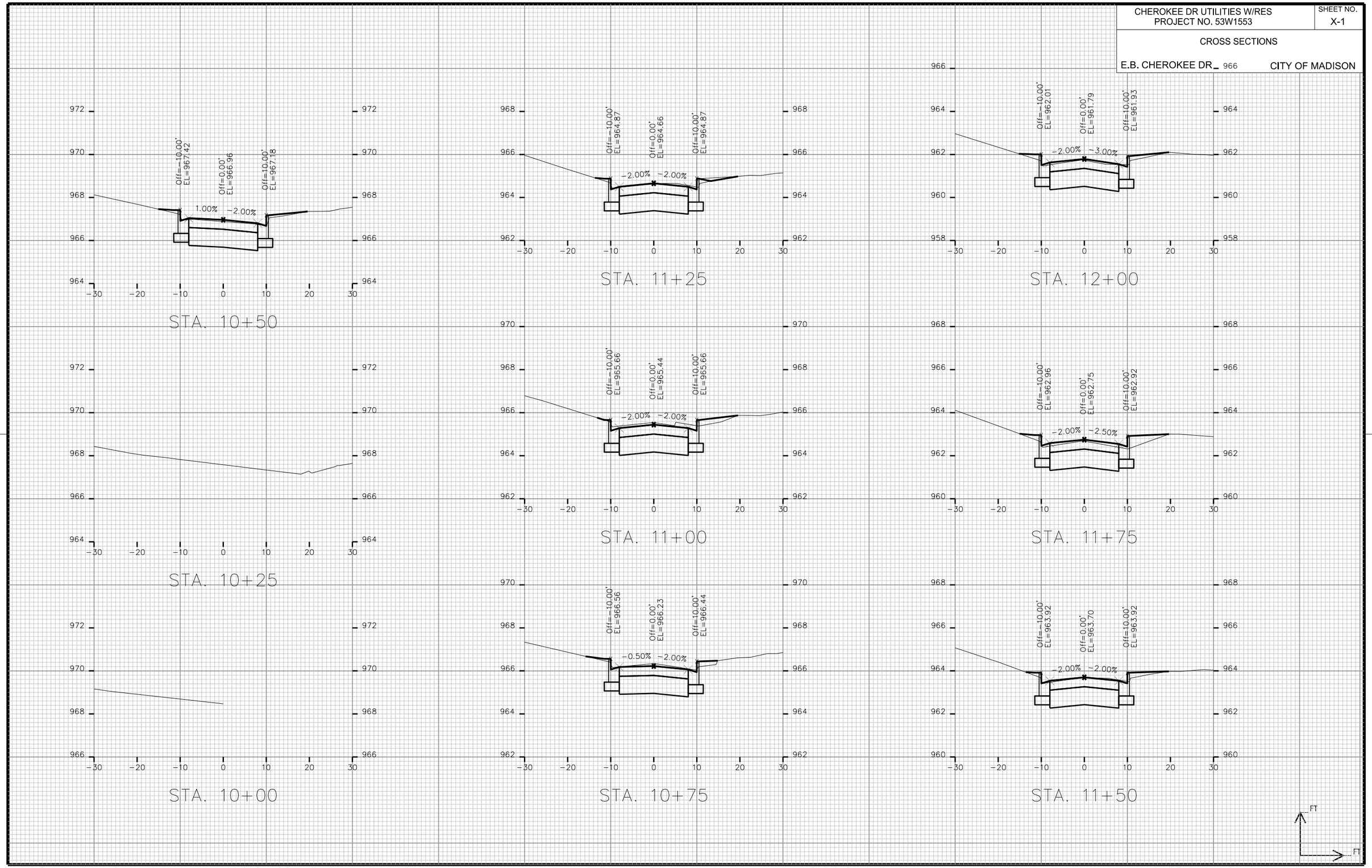

PLOT SCALE: _____

PLOT NAME: _____

REV. DATE: _____

ORIGINATOR: CITY OF MADISON, STREETS DIVISION

FILE NAME: M:\DESIGN\Projects\53W1553\Streets\Design\53W1553-CherokeeEN-XSection##.dgn

DATE: 2/19/2013

CHEROKEE DR UTILITIES W/RES. PROJECT NO. 53W1553	SHEET NO. X-2
CROSS SECTIONS	
E.B. CHEROKEE DR	CITY OF MADISON

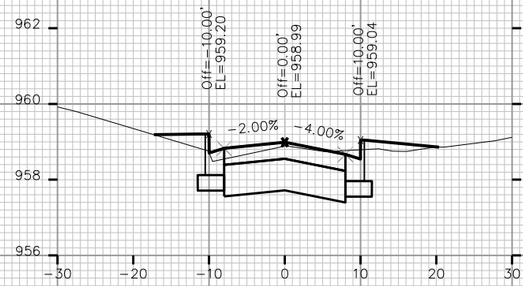

STA. 12+75

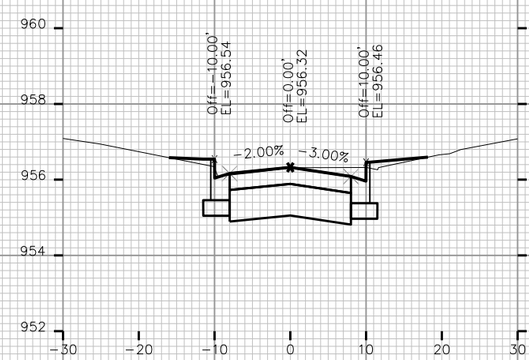

STA. 13+50

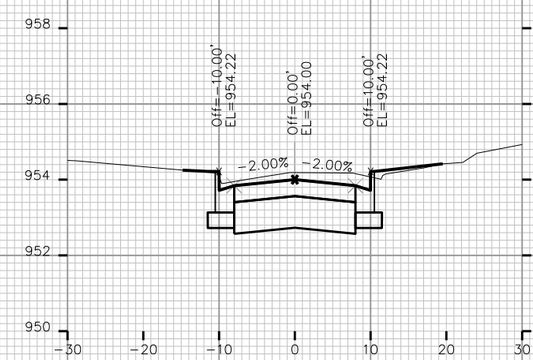

STA. 14+25

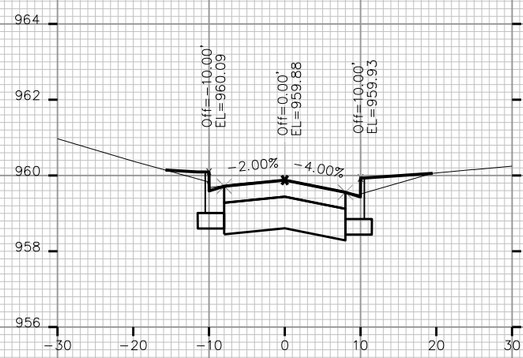

STA. 12+50

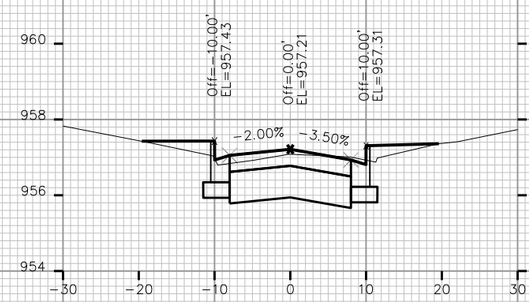

STA. 13+25

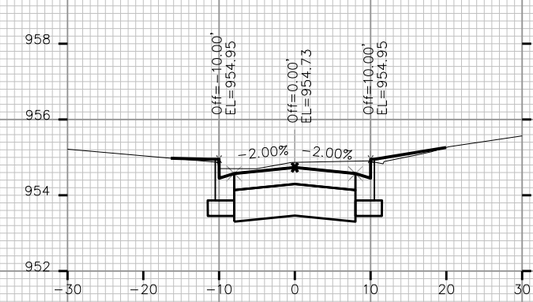

STA. 14+00

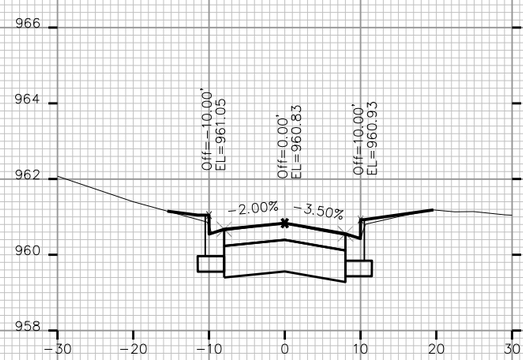

STA. 12+25

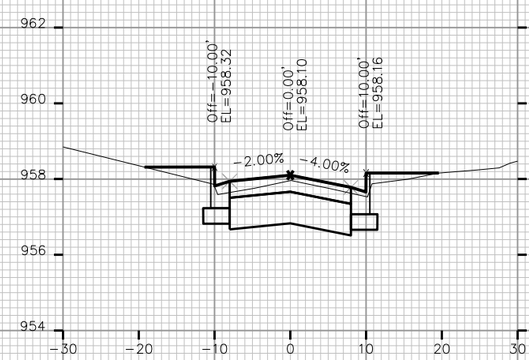

STA. 13+00

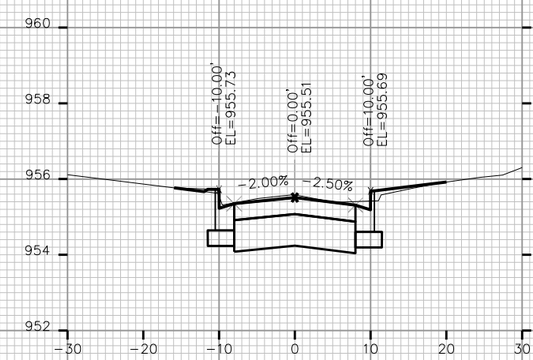

STA. 13+75

FT

FT

PLOT SCALE: _____

PLOT NAME: _____

REV. DATE: _____

ORIGINATOR: CITY OF MADISON, STREETS DIVISION

FILE NAME: M:\DESIGN\Projects\53W1553\Streets\Design\53W1553-CherokeeEN-XSection##.dgn

DATE: 2/19/2013

CHEROKEE DR UTILITES W/RES. PROJECT NO. 53W1553	SHEET NO. X-3
CROSS SECTIONS	
E.B. CHEROKEE DR	CITY OF MADISON

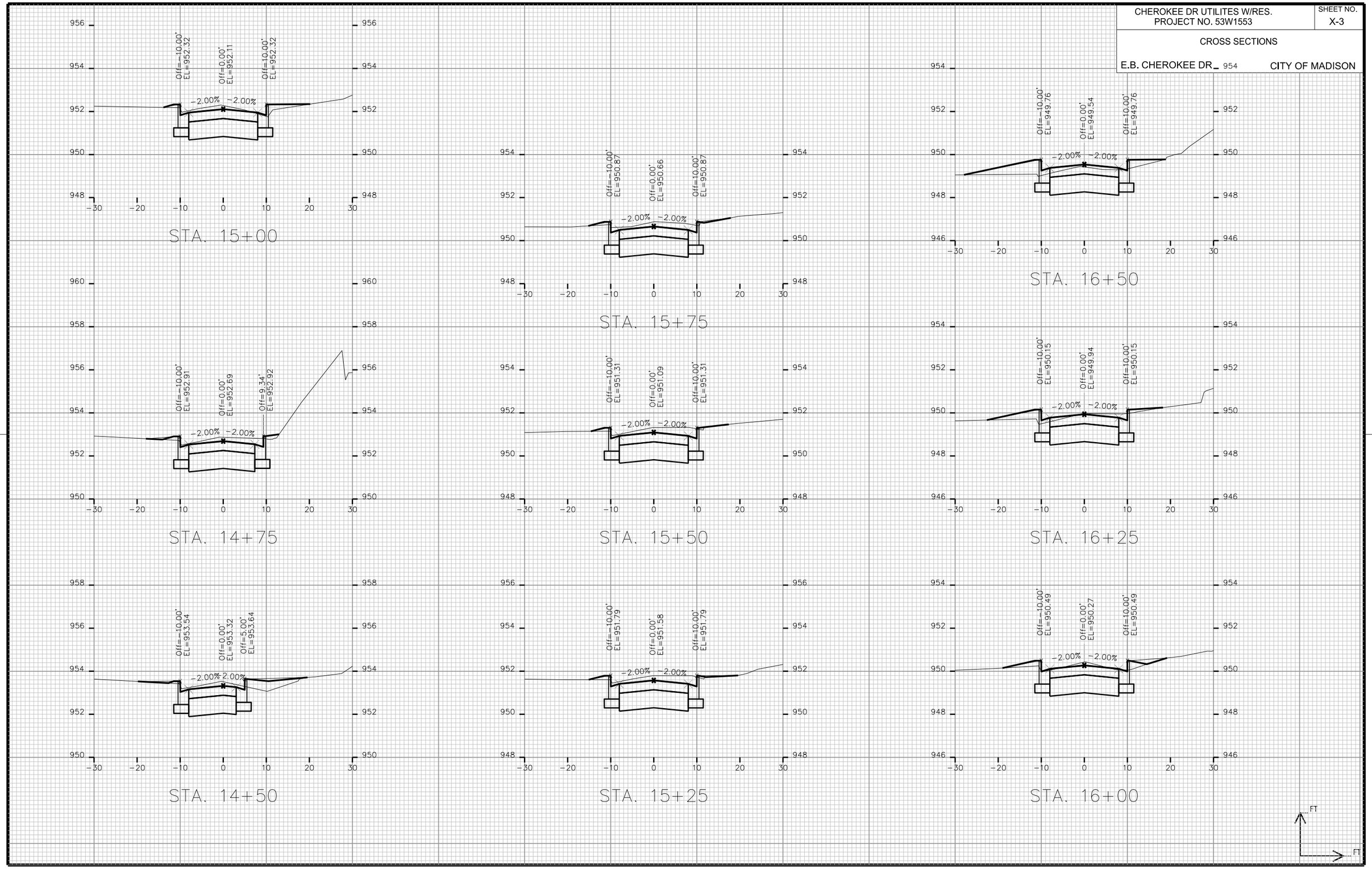

PLOT SCALE: _____

PLOT NAME: _____

REV. DATE: _____

ORIGINATOR: CITY OF MADISON, STREETS DIVISION

FILE NAME: M:\DESIGN\Projects\53W1553\Streets\Design\53W1553-CherokeeEN-XSection##.dgn

DATE: 2/19/2013

CHEROKEE DR UTILITIES W/RES.
PROJECT NO. 53W1553

SHEET NO. X-4

CROSS SECTIONS

E.B. CHEROKEE DR 950 CITY OF MADISON

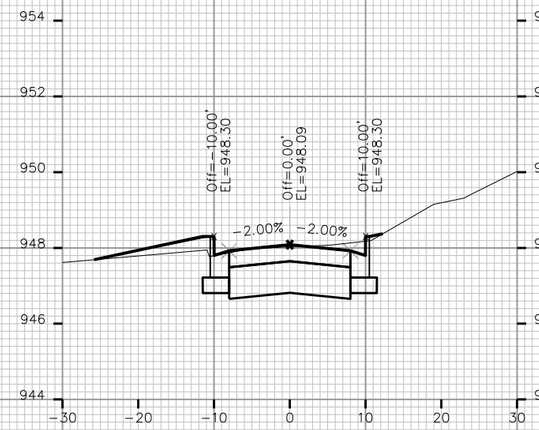

STA. 17+25

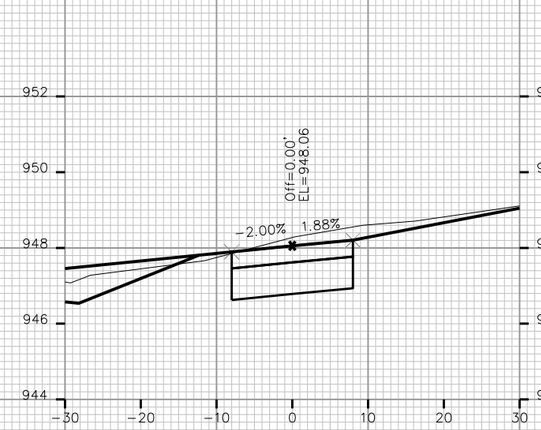

STA. 18+00

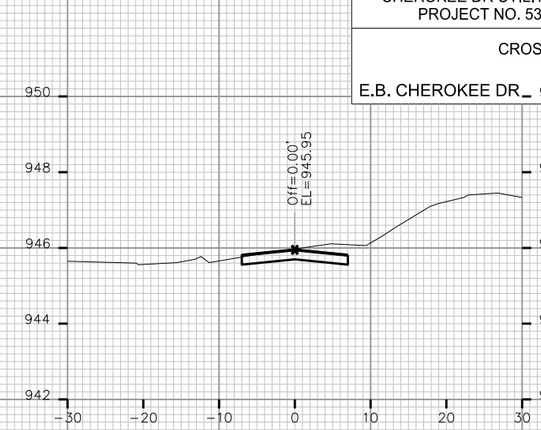

STA. 18+75

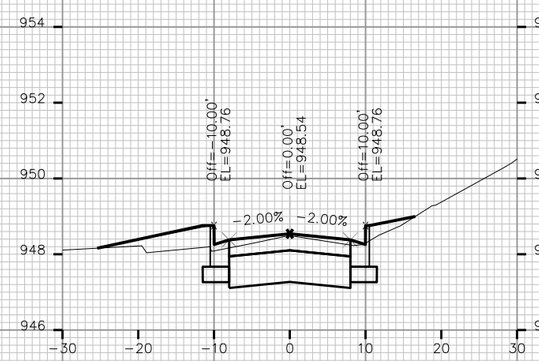

STA. 17+00

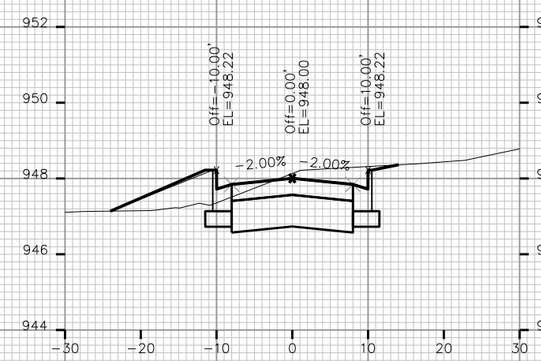

STA. 17+75

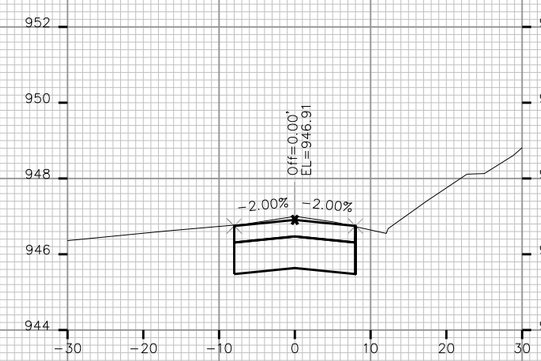

STA. 18+50

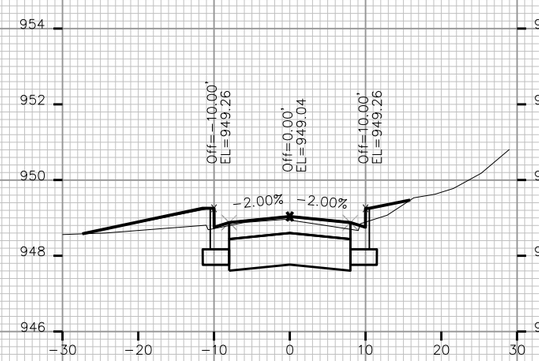

STA. 16+75

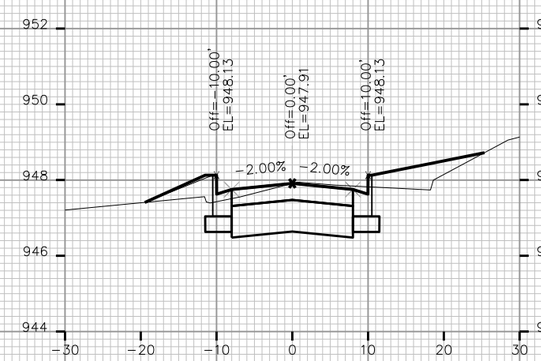

STA. 17+50

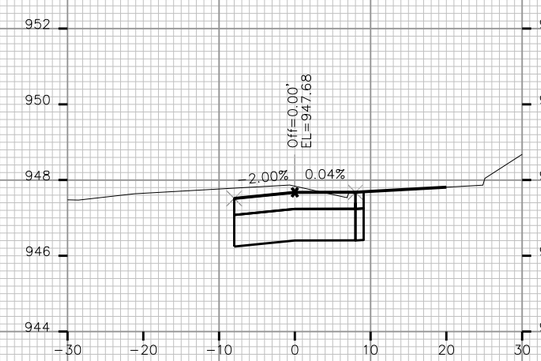

STA. 18+25

FT
FT

PLOT SCALE: _____

PLOT NAME: _____

REV. DATE: _____

ORIGINATOR: CITY OF MADISON, STREETS DIVISION

FILE NAME: M:\DESIGN\Projects\53W1553\Streets\Design\53W1553-CherokeeEN-XSection##.dgn

DATE: 2/21/2013

CHEROKEE DR UTILITIES W/RES. PROJECT NO. 53W1553	SHEET NO. X-5
CROSS SECTIONS	
W.B. CHEROKEE DR	CITY OF MADISON

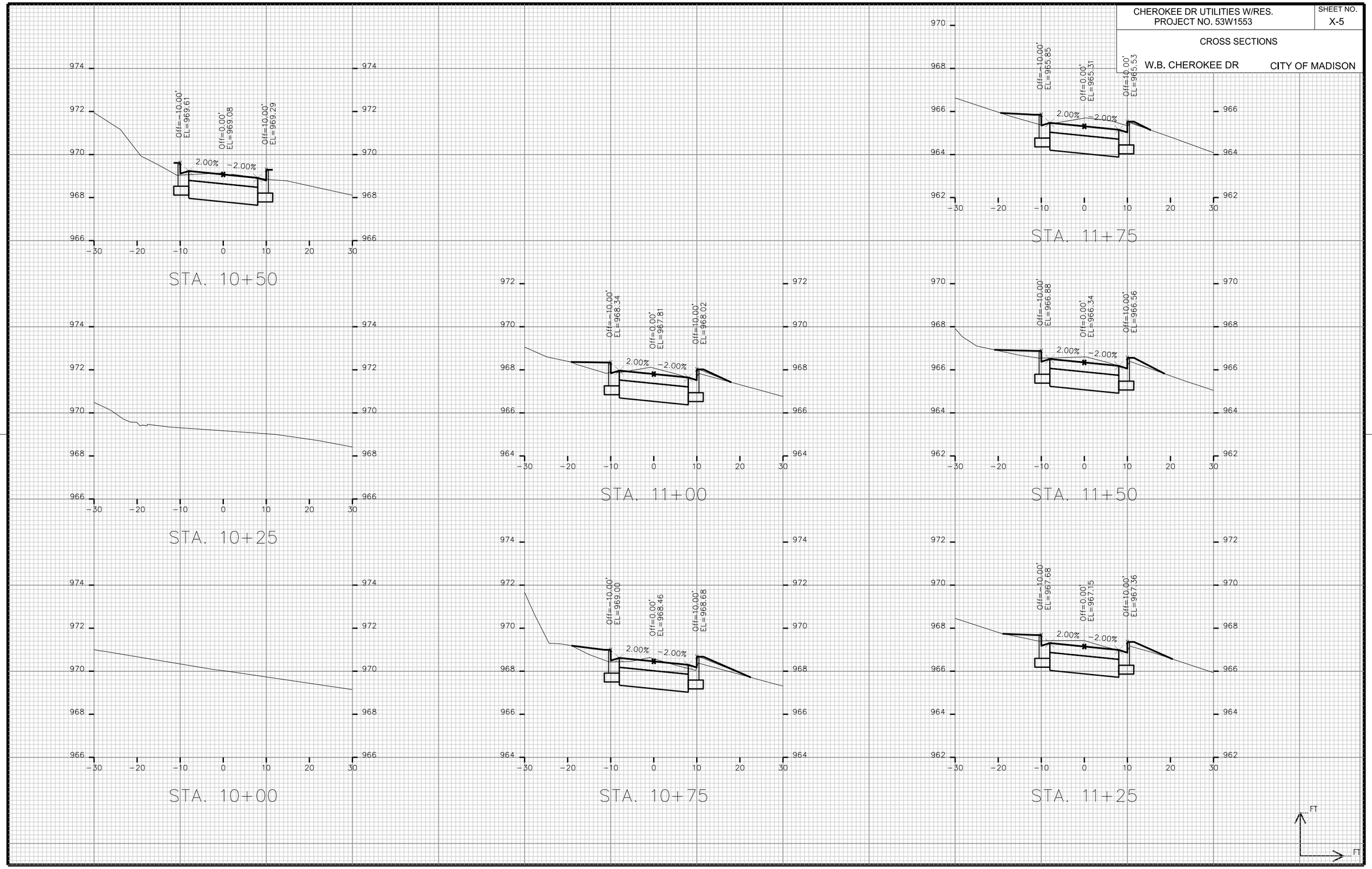

PLOT SCALE: _____

PLOT NAME: _____

REV. DATE: _____

ORIGINATOR: CITY OF MADISON, STREETS DIVISION

FILE NAME: M:\DESIGN\Projects\53W1553\Streets\Design\53W1553-CherokeeEN-XSection##.dgn

DATE: 2/19/2013

CHEROKEE DR UTILITIES W/RES. PROJECT NO. 53W1553	SHEET NO. X-6
CROSS SECTIONS	
W.B. CHEROKEE DR	CITY OF MADISON

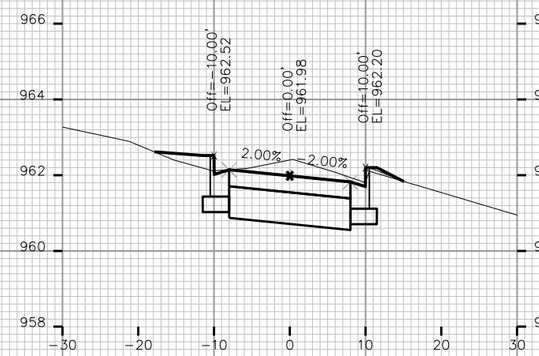

STA. 12+50

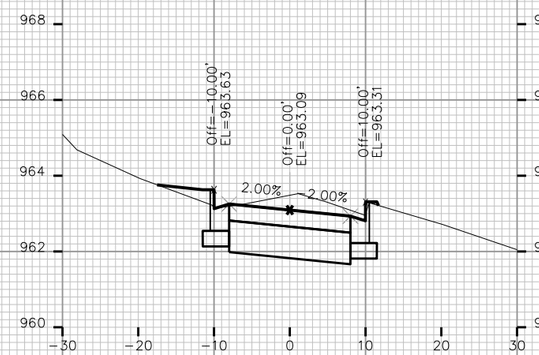

STA. 12+25

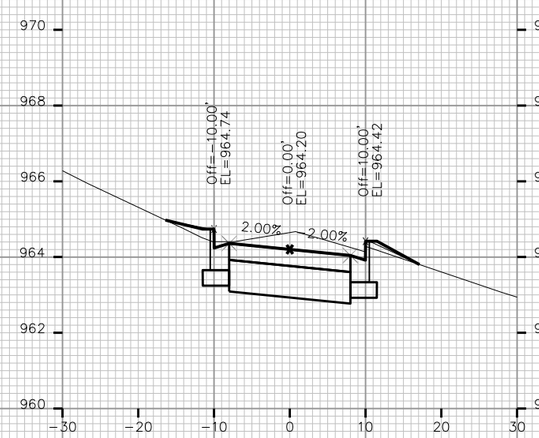

STA. 12+00

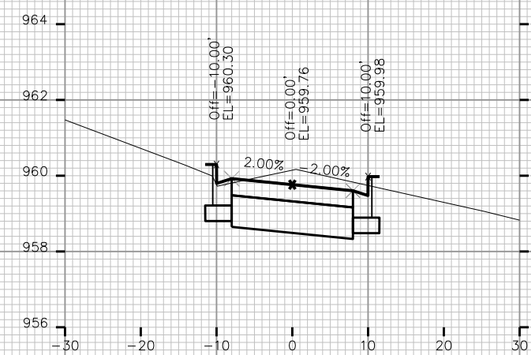

STA. 13+00

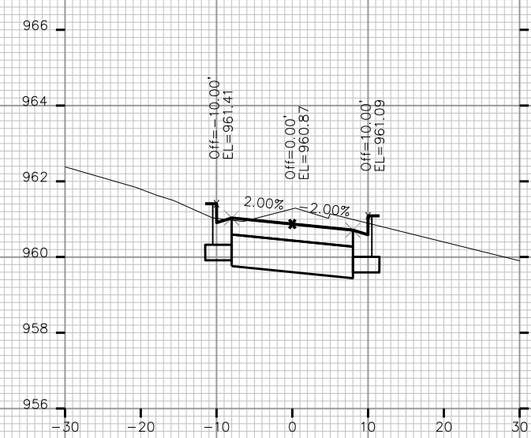

STA. 12+75

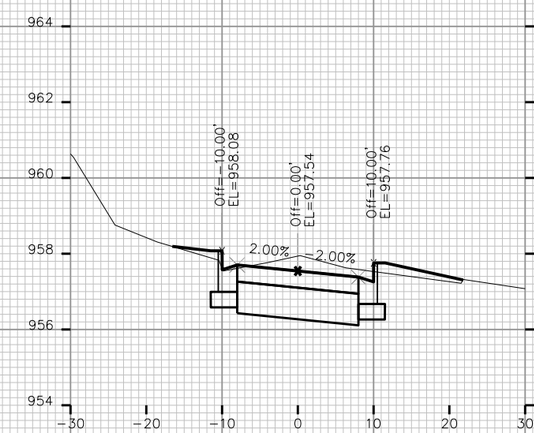

STA. 13+50

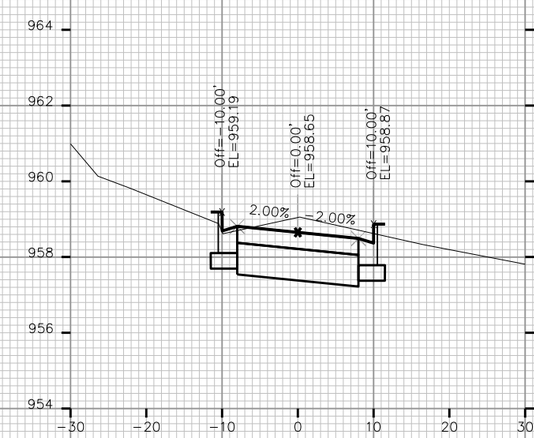

STA. 13+25

FT
FT

PLOT SCALE: ____
PLOT NAME: ____
REV. DATE: ____
ORIGINATOR: CITY OF MADISON, STREETS DIVISION

FILE NAME: M:\DESIGN\Projects\53W1553\Streets\Design\53W1553-CherokeeEN-XSection##.dgn

DATE: 2/19/2013

CHEROKEE DR UTILITIES W/RES.
PROJECT NO. 53W1553

SHEET NO.
X-7

CROSS SECTIONS

W.B. CHEROKEE DR

CITY OF MADISON

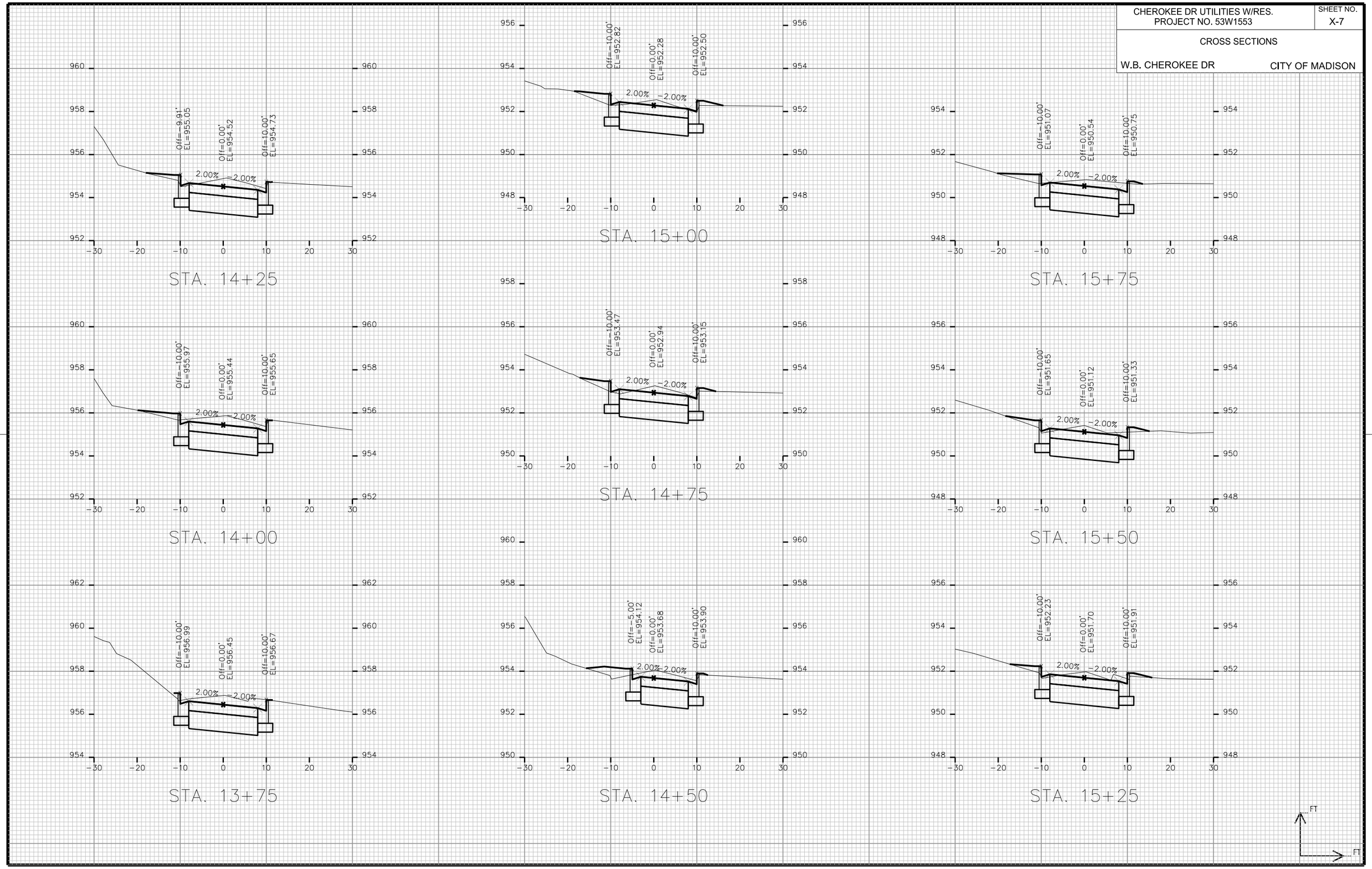

PLOT SCALE: _____

PLOT NAME: _____

REV. DATE: _____

ORIGINATOR: CITY OF MADISON, STREETS DIVISION

FILE NAME: M:\DESIGN\Projects\53W1553\Streets\Design\53W1553-CherokeeEN-XSection##.dgn

DATE: 2/19/2013

CHEROKEE DR UTILITIES W/RES. PROJECT NO. 53W1553	SHEET NO. X-8
CROSS SECTIONS	
W.B. CHEROKEE DR	CITY OF MADISON

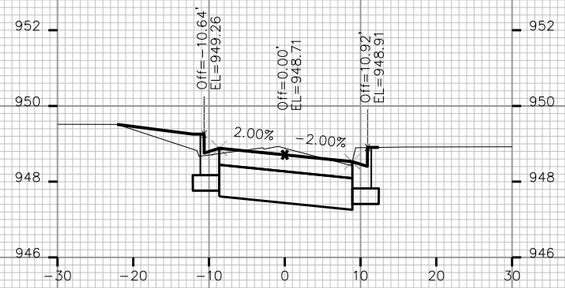

STA. 16+50

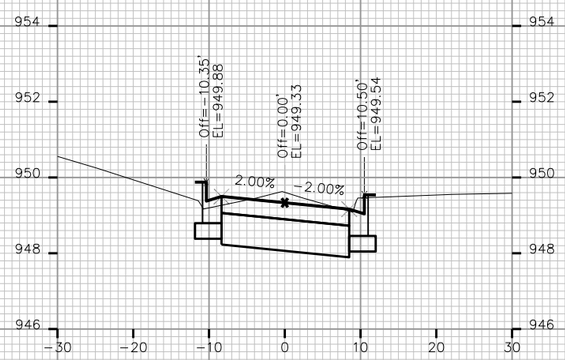

STA. 16+25

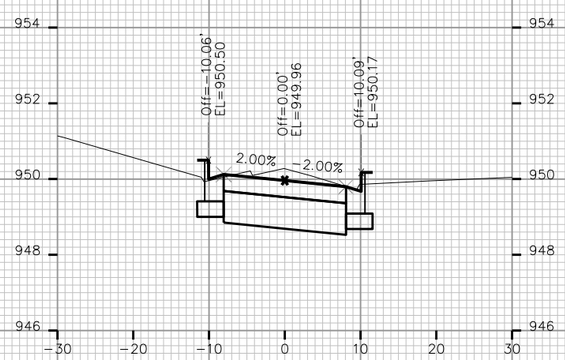

STA. 16+00

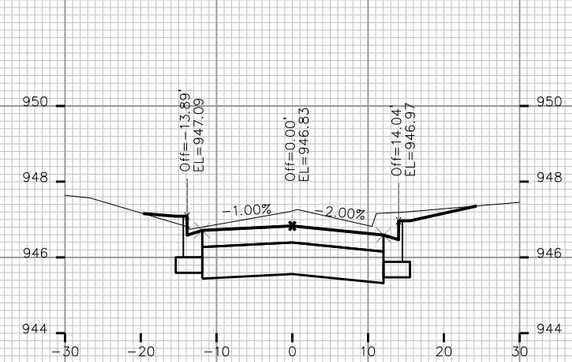

STA. 17+25

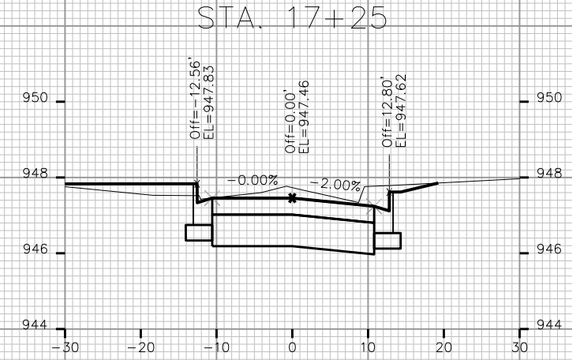

STA. 17+00

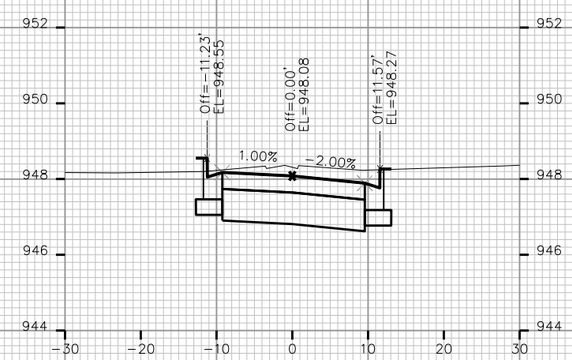

STA. 16+75

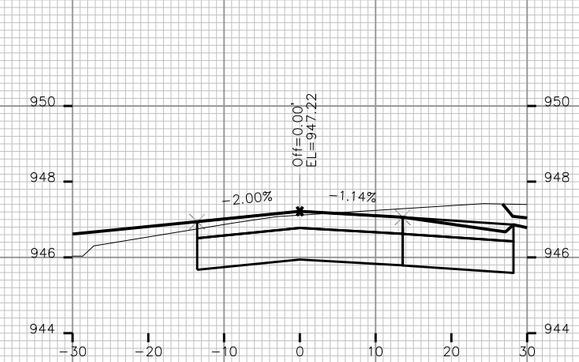

STA. 18+00

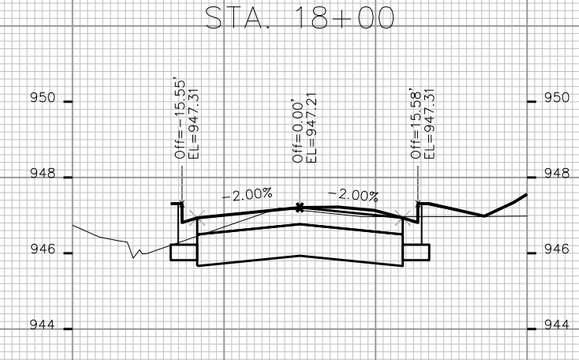

STA. 17+75

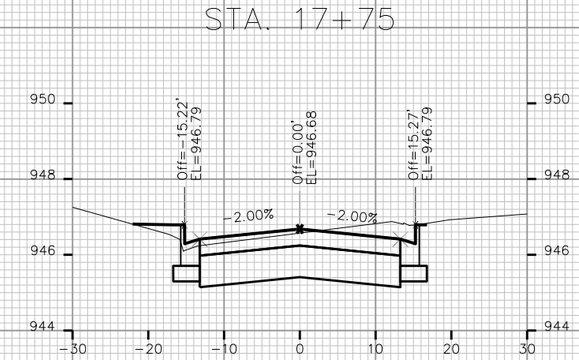

STA. 17+50

FT
FT

PLOT SCALE: ____
PLOT NAME: ____
REV. DATE: ____
ORIGINATOR: CITY OF MADISON, STREETS DIVISION

FILE NAME: M:\DESIGN\Projects\53W1553\Streets\Design\53W1553-CherokeeEN-XSection##.dgn

DATE: 2/19/2013

CHEROKEE DR UTILITIES W/RES.
PROJECT NO. 53W1553

SHEET NO.
X-9

CROSS SECTIONS

W.B. CHEROKEE DR.

CITY OF MADISON

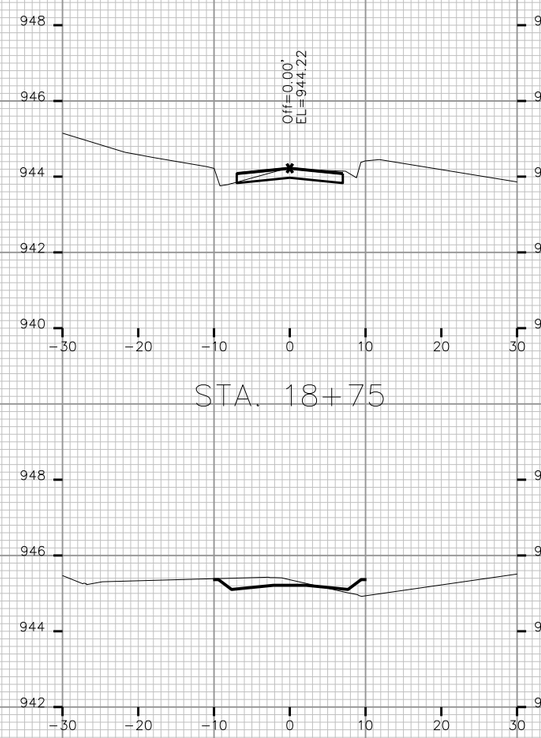

STA. 18+75

STA. 18+50

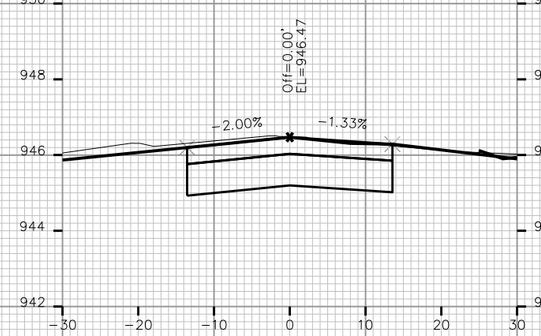

STA. 18+25

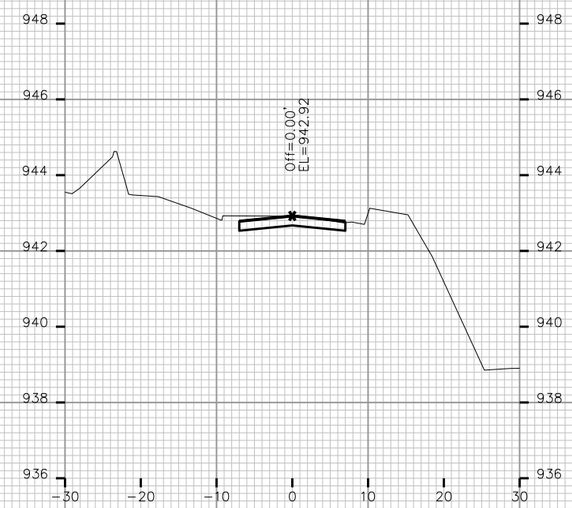

STA. 19+25

STA. 19+00

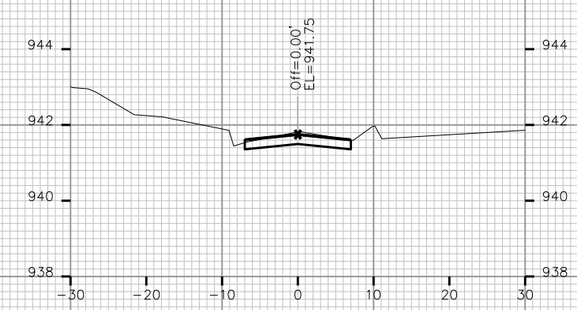

STA. 19+75

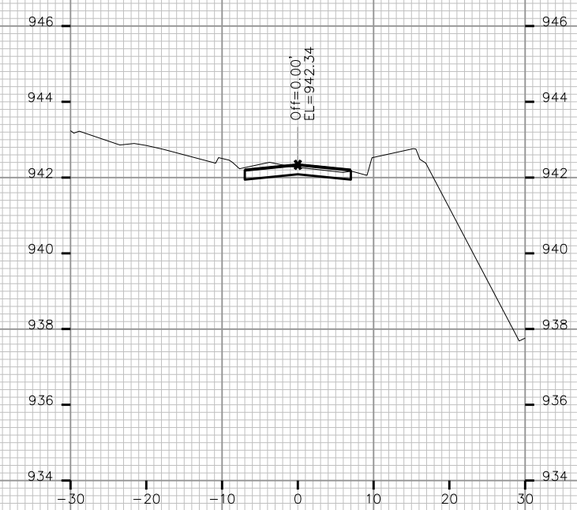

STA. 19+50

FT

FT

PLOT SCALE: ____

PLOT NAME: ____

REV. DATE: ____

ORIGINATOR: CITY OF MADISON, STREETS DIVISION

FILE NAME: M:\DESIGN\Projects\53W1553\Streets\Design\53W1553-CherokeeEN-XSection##.dgn

DATE: 2/19/2013