CITY OF MADISON
2014 PARKING GARAGE MAINTENANCE
MADISON, WISCONSIN

CITY OF MADISON CONTRACT NO. 7283
BID DRAWINGS

STATE STREET CAMPUS (LAKE) GARAGE
415 NORTH LAKE STREET

STATE STREET CAPITOL GARAGE
214 NORTH CARROLL STREET

CAPITOL SQUARE NORTH GARAGE
218 EAST MIFFLIN STREET

GOVERNMENT EAST GARAGE
215 SOUTH PINCKNEY STREET

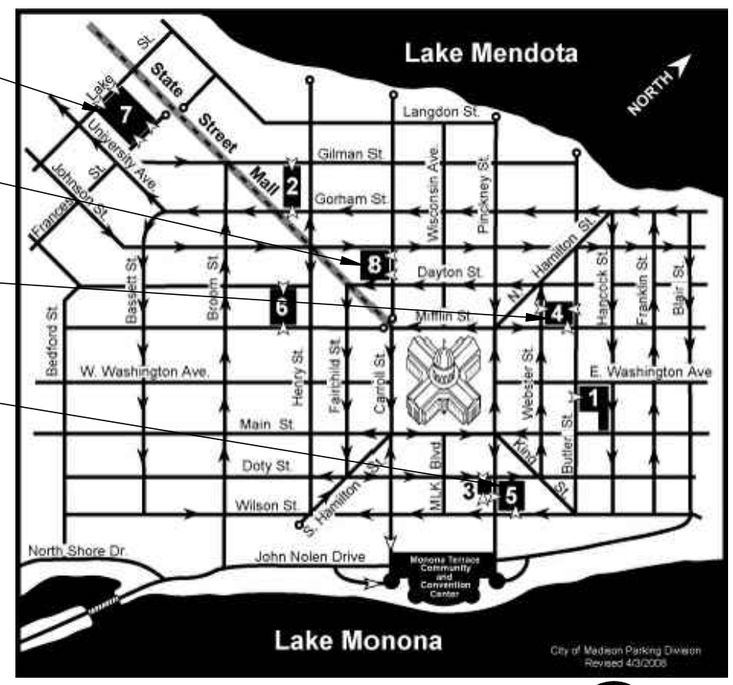

PARTIAL CITY OF MADISON LOCATION MAP

NORTH

DRAWING INDEX

TITLE SHEET	T1
CAPITOL SQUARE NORTH GARAGE	CN1
STATE STREET CAPITOL GARAGE	SC1
STATE STREET CAMPUS (LAKE) GARAGE	SL1 THRU SL3
GOVERNMENT EAST GARAGE	GE1, GE2
DETAILS	D1, D2
STORM SEWER MODIFICATIONS (SC)	P000, P100D, P100, P101

INFORMATION PERTAINING TO EXISTING CONDITIONS GIVEN ON THESE DRAWINGS REPRESENTS TO THE BEST OF OUR KNOWLEDGE THE ACTUAL EXISTING FIELD CONDITIONS. JSD, INC. MAKES NO WARRANTY AS TO THEIR ACCURACY. CONTRACTOR TO FIELD VERIFY EXISTING CONDITIONS IMPERATIVE TO THE NEW WORK. REPORT DISCREPANCIES BETWEEN DRAWINGS AND FIELD CONDITIONS TO THE ENGINEER FOR REVIEW. ANY WORK PERFORMED PRIOR TO RESOLUTION OF DISCREPANCIES BY THE ENGINEER IS SUBJECT TO REMOVAL AND REPLACEMENT AT NO ADDITIONAL COST TO THE CONTRACT.

CONTRACTORS ARE RESPONSIBLE FOR THE MEANS, METHODS, TECHNIQUES, SEQUENCES, AND PROCEDURES OF CONSTRUCTION INCLUDING, BUT NOT LIMITED TO TEMPORARY SUPPORTS, SHORING, AND FORMING TO SUPPORT IMPOSED LOADS AND OTHER SIMILAR ITEMS.

THE LOCATION OF DETERIORATED CONCRETE AND CRACKS SHOWN ARE FOR REFERENCE PURPOSES ONLY. DETERIORATED CONCRETE AND CRACKS TO BE REPAIRED WILL BE DESIGNATED BY THE ENGINEER AT THE TIME OF CONSTRUCTION.

- NUMBER IN HEXAGON REPRESENTS BID/WORK ITEM
- UNSOUND CONCRETE
- CRACK

JSD Professional Services, Inc.
• Engineers • Surveyors • Planners

"BUILDING RELATIONSHIPS WITH A COMMITMENT TO CLIENT SATISFACTION THROUGH TRUST, QUALITY AND EXPERIENCE"

- CIVIL ENGINEERING
- SURVEYING & MAPPING
- CONSTRUCTION SERVICES
- WATER RESOURCES
- PLANNING & DEVELOPMENT
- TRANSPORTATION ENGINEERING
- STRUCTURAL ENGINEERING
- LANDSCAPE ARCHITECTURE

MADISON REGIONAL OFFICE
161 HORIZON DRIVE, SUITE 101
VERONA, WISCONSIN 53593
608.848.5060 PHONE | 608.848.2255 FAX

MADISON | MILWAUKEE
KENOSHA | APPLETON
www.jsdinc.com

SERVICES PROVIDED TO:
CITY OF MADISON, PARKING UTILITY
215 MARTIN LUTHER KING JR. BLVD
MADISON, WISCONSIN 53701-2986

PROJECT:
2014 PARKING RAMP RESTORATION

PROJECT LOCATION:

JSD PROJECT NO.: 13-5576

SEAL/SIGNATURE:

ALTHOUGH EVERY EFFORT HAS BEEN MADE IN PREPARING THESE PLANS AND CHECKING THEM FOR ACCURACY, THE CONTRACTOR AND SUBCONTRACTORS MUST CHECK ALL DETAIL AND DIMENSIONS OF THEIR TRADE AND BE RESPONSIBLE FOR THE SAME.

DESIGN:	JEE	
DRAWN:	PGB	
APPROVED:	JJE	

PLAN MODIFICATIONS:	DATE:

DIGGERS HOTLINE
Toll Free (800) 242-8511
Milwaukee Area (414) 259-1181
Hearing Impaired TDD (800) 542-2289
www.DiggersHotline.com

SHEET TITLE:
TITLE SHEET

SHEET NUMBER:
T1

THESE PLANS AND DESIGNS ARE COPYRIGHT PROTECTED AND MAY NOT BE USED IN WHOLE OR IN PART WITHOUT THE WRITTEN CONSENT OF JSD PROFESSIONAL SERVICES, INC.

File: I:\2013\135576\DWG\Title & Detail Sheets\DETAILS.dwg Layout: T1 User: gruddell Plotted: Feb 25, 2014 - 10:11am Xref's:

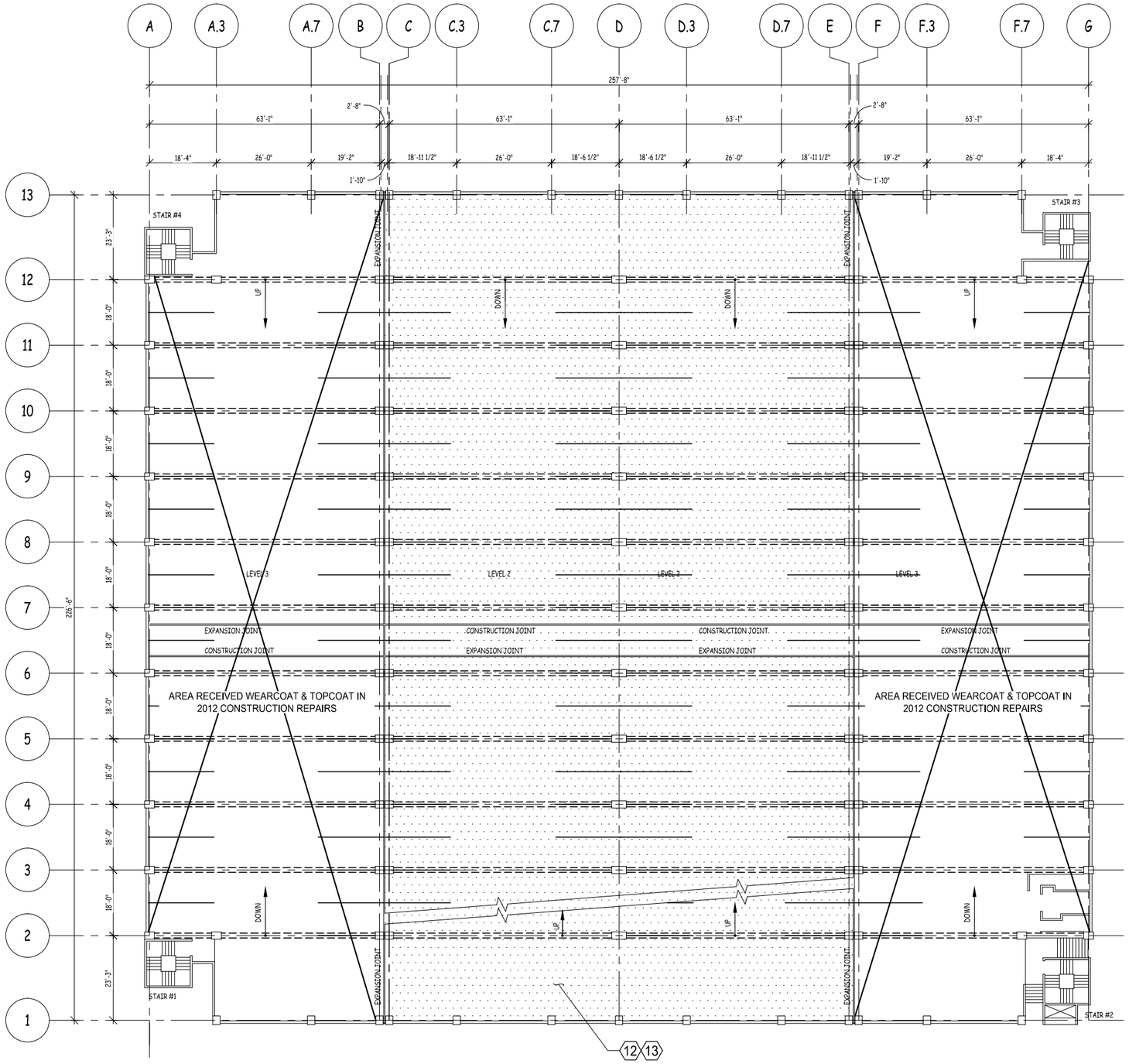

LEVELS 2 AND 3 FLOOR PLAN

1 / CN1

SCALE : 1/32" = 1'-0"

LEGEND

AREA TO RECEIVE NEW MEMBRANE WEARCOAT & TOPCOAT. SELECTED AREAS WILL RECEIVE COMPLETE FULLY ADHERED MEMBRANE SYSTEM.

(X) REPAIR ITEM

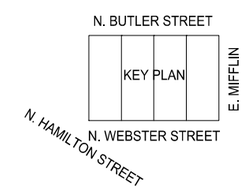

PLAN NORTH

TRUE NORTH

JSD Professional Services, Inc.
• Engineers • Surveyors • Planners

"BUILDING RELATIONSHIPS WITH A COMMITMENT TO CLIENT SATISFACTION THROUGH TRUST, QUALITY AND EXPERIENCE"

- CIVIL ENGINEERING
- SURVEYING & MAPPING
- CONSTRUCTION SERVICES
- WATER RESOURCES
- PLANNING & DEVELOPMENT
- TRANSPORTATION ENGINEERING
- STRUCTURAL ENGINEERING
- LANDSCAPE ARCHITECTURE

MADISON REGIONAL OFFICE
161 HORIZON DRIVE, SUITE 101
VERONA, WISCONSIN 53593
608.848.5060 PHONE | 608.848.2255 FAX
MADISON | MILWAUKEE
KENOSHA | APPLETON
www.jsdinc.com

SERVICES PROVIDED TO:

CITY OF MADISON, PARKING UTILITY

215 MARTIN LUTHER KING JR. BLVD
MADISON, WISCONSIN 53701-2986

PROJECT:

2014 PARKING RAMP RESTORATION

PROJECT LOCATION:

CAPITOL SQUARE NORTH

JSD PROJECT NO.: 13-5576

SEAL/SIGNATURE:

ALTHOUGH EVERY EFFORT HAS BEEN MADE IN PREPARING THESE PLANS AND CHECKING THEM FOR ACCURACY, THE CONTRACTOR AND SUBCONTRACTORS MUST CHECK ALL DETAIL AND DIMENSIONS OF THEIR TRADE AND BE RESPONSIBLE FOR THE SAME.

DESIGN:	JJE
DRAWN:	PGB
APPROVED:	JJE

PLAN MODIFICATIONS:	DATE:

DIGGERS HOTLINE
Toll Free (800) 242-8511
Milwaukee Area (414) 259-1181
Hearing Impaired TDD (800) 542-2289
www.DiggersHotline.com

SHEET TITLE:

LEVELS 2 AND 3 FLOOR PLAN

SHEET NUMBER:

CN1

THESE PLANS AND DESIGNS ARE COPYRIGHT PROTECTED AND MAY NOT BE USED IN WHOLE OR IN PART WITHOUT THE WRITTEN CONSENT OF JSD PROFESSIONAL SERVICES, INC.

File: I:\2013\135276\Capital Square North\CSN Condition Evaluation\CSN 2013 - Evaluation.dwg Layout: CN1 User: gruddell Plotted: Feb 24, 2014 - 2:54pm Xref's:

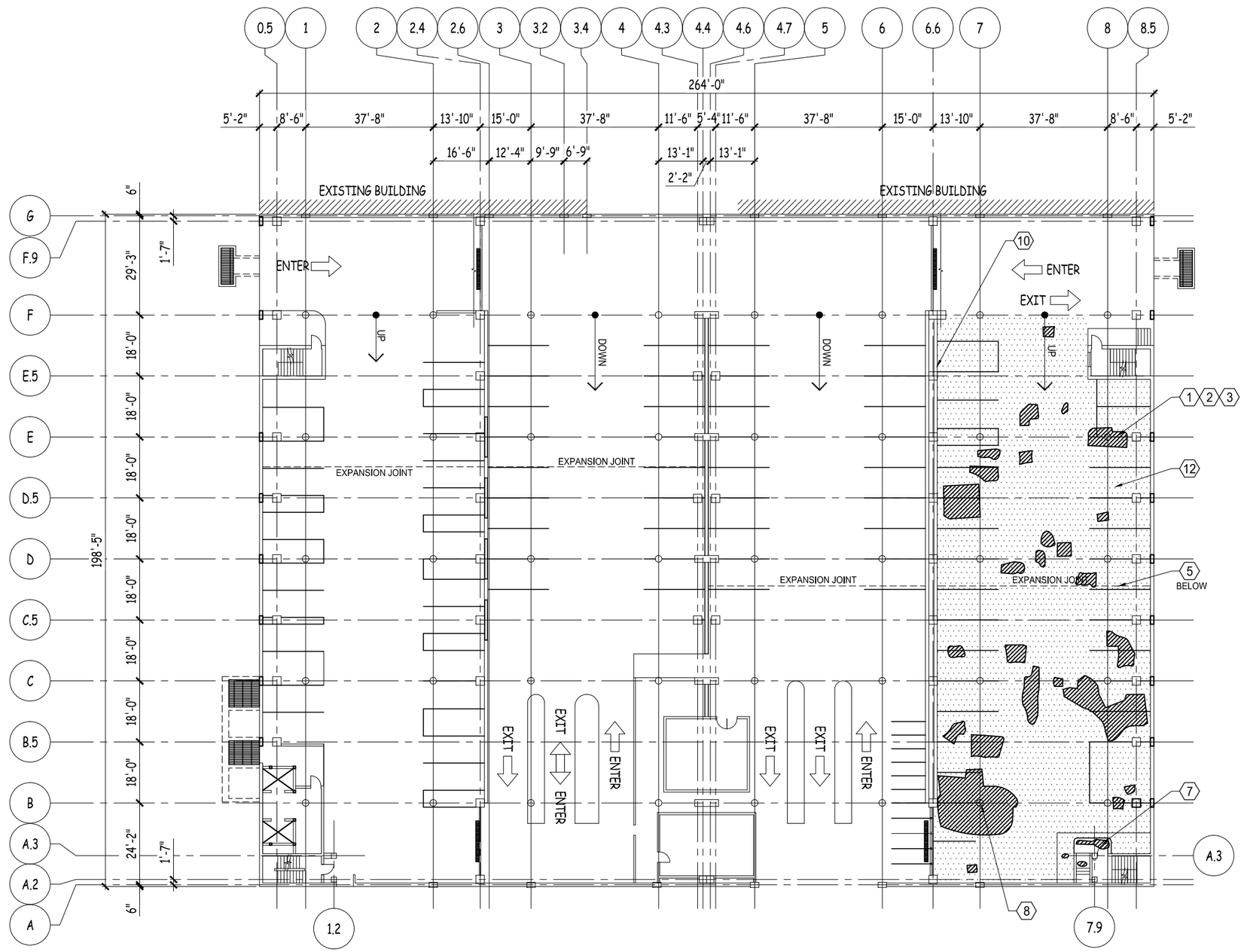

LEVEL 1 FLOOR PLAN

1 / SC1

SCALE : 1/32" = 1'-0"

PLAN NORTH TRUE NORTH

LEGEND

- CONCRETE DELAMINATION
- REPAIR ITEM
- FULL SYSTEM MEMBRANE REPLACEMENT

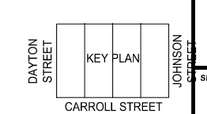

JSD Professional Services, Inc.
• Engineers • Surveyors • Planners

"BUILDING RELATIONSHIPS WITH A COMMITMENT TO CLIENT SATISFACTION THROUGH TRUST, QUALITY AND EXPERIENCE"

- CIVIL ENGINEERING
- SURVEYING & MAPPING
- CONSTRUCTION SERVICES
- WATER RESOURCES
- PLANNING & DEVELOPMENT
- TRANSPORTATION ENGINEERING
- STRUCTURAL ENGINEERING
- LANDSCAPE ARCHITECTURE

MADISON REGIONAL OFFICE
161 HORIZON DRIVE, SUITE 101
VERONA, WISCONSIN 53593
608.848.5060 PHONE | 608.848.2255 FAX
MADISON | MILWAUKEE
KENOSHA | APPLETON
www.jsdinc.com

SERVICES PROVIDED TO:

CITY OF MADISON, PARKING UTILITY

215 MARTIN LUTHER KING JR. BLVD
MADISON, WISCONSIN 53701-2986

PROJECT:

2014 PARKING RAMP RESTORATION

PROJECT LOCATION:

STATE STREET CAPITOL

JSD PROJECT NO.: 13-5576

SEAL/SIGNATURE:

ALTHOUGH EVERY EFFORT HAS BEEN MADE IN PREPARING THESE PLANS AND CHECKING THEM FOR ACCURACY, THE CONTRACTOR AND SUBCONTRACTORS MUST CHECK ALL DETAIL AND DIMENSIONS OF THEIR TRADE AND BE RESPONSIBLE FOR THE SAME.

DESIGN:	JJE
DRAWN:	PGB
APPROVED:	JJE

PLAN MODIFICATIONS:	DATE:

DIGGERS HOTLINE
Toll Free (800) 242-8511
Milwaukee Area (414) 259-1181
Hearing Impaired TDD (800) 542-2289
www.DiggersHotline.com

SHEET TITLE:

FIRST LEVEL TOPSIDE PLAN

SHEET NUMBER:

SC1

THESE PLANS AND DESIGNS ARE COPYRIGHT PROTECTED AND MAY NOT BE USED IN WHOLE OR IN PART WITHOUT THE WRITTEN CONSENT OF JSD PROFESSIONAL SERVICES, INC.

File: I:\2013\135576\State Street Capitol\SSCO Condition Evaluation\SSCO 2013 - Evaluation.dwg Layout: SC1 User: gruddell Plotted: Feb 24, 2014 - 2:55pm Xref's:

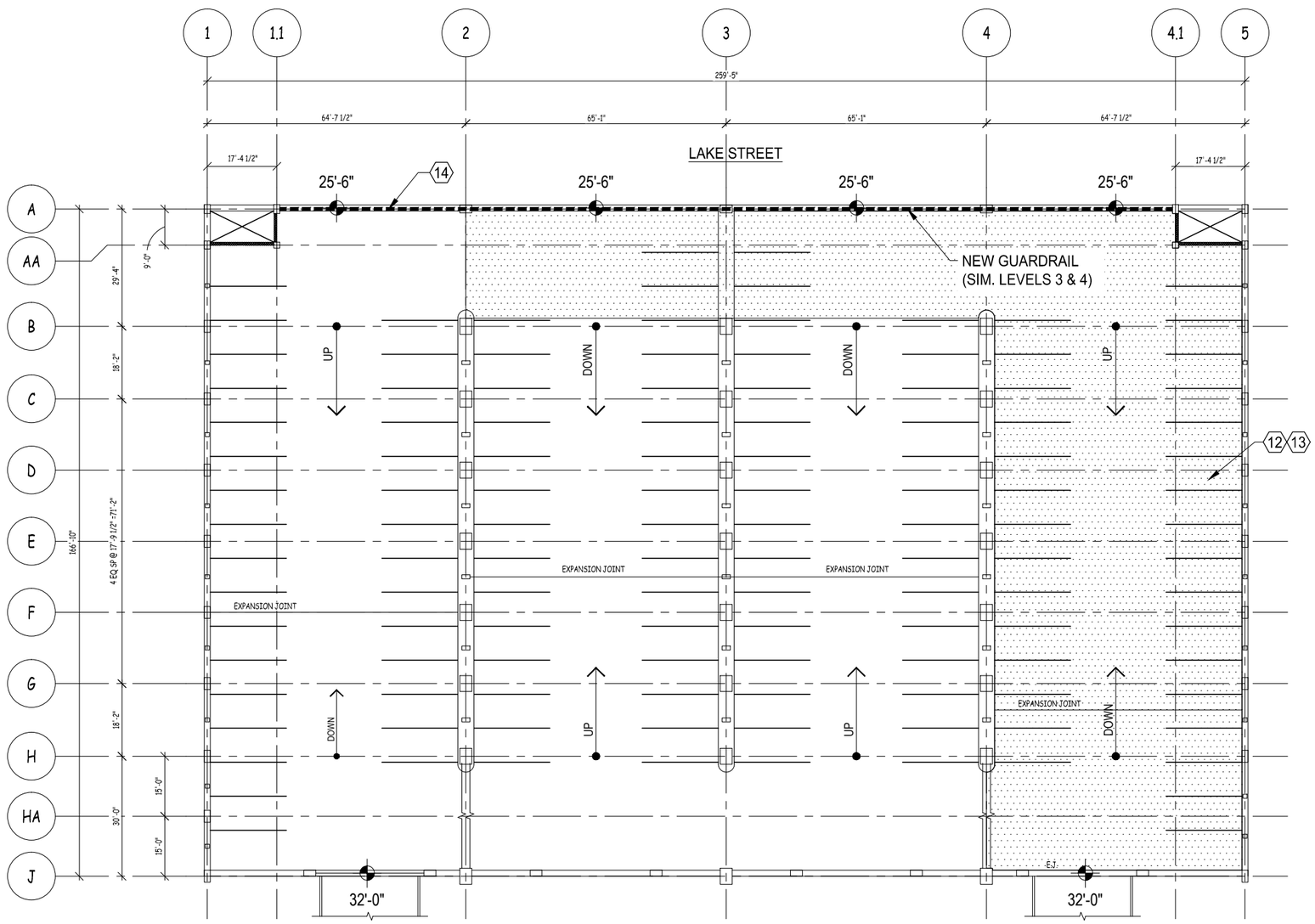

LEVEL 2 TOPSIDE PLAN

1 / SL1

SCALE : 1/32" = 1'-0"

LEGEND

- AREA TO RECEIVE NEW MEMBRANE WEARCOAT & TOPCOAT. SELECTED AREAS WILL RECEIVE COMPLETE FULLY ADHERED MEMBRANE SYSTEM.
- (X) REPAIR ITEM
- VEHICULAR BARRIER GUARDRAIL

NORTH

LAKE STREET

KEY PLAN

HAWTHORNE COURT

JSD Professional Services, Inc.
• Engineers • Surveyors • Planners

"BUILDING RELATIONSHIPS WITH A COMMITMENT TO CLIENT SATISFACTION THROUGH TRUST, QUALITY AND EXPERIENCE"

- CIVIL ENGINEERING
- SURVEYING & MAPPING
- CONSTRUCTION SERVICES
- WATER RESOURCES
- PLANNING & DEVELOPMENT
- TRANSPORTATION ENGINEERING
- STRUCTURAL ENGINEERING
- LANDSCAPE ARCHITECTURE

MADISON REGIONAL OFFICE
161 HORIZON DRIVE, SUITE 101
VERONA, WISCONSIN 53593
608.848.5060 PHONE | 608.848.2255 FAX
MADISON | MILWAUKEE
KENOSHA | APPLETON
www.jsdinc.com

SERVICES PROVIDED TO:

CITY OF MADISON, PARKING UTILITY

215 MARTIN LUTHER KING JR. BLVD
MADISON, WISCONSIN 53701-2986

PROJECT:

2014 PARKING RAMP RESTORATION

PROJECT LOCATION:

STATE STREET CAMPUS - LAKE

JSD PROJECT NO.: 13-5576

SEAL/SIGNATURE:

ALTHOUGH EVERY EFFORT HAS BEEN MADE IN PREPARING THESE PLANS AND CHECKING THEM FOR ACCURACY, THE CONTRACTOR AND SUBCONTRACTORS MUST CHECK ALL DETAIL AND DIMENSIONS OF THEIR TRADE AND BE RESPONSIBLE FOR THE SAME.

DESIGN: JJE
DRAWN: PGB
APPROVED: JJE

PLAN MODIFICATIONS:	DATE:

DIGGERS HOTLINE
Toll Free (800) 242-8511
Milwaukee Area (414) 259-1181
Hearing Impaired TDD (800) 542-2289
www.DiggersHotline.com

SHEET TITLE:

SECOND LEVEL TOPSIDE PLAN

SHEET NUMBER:

SL1

THESE PLANS AND DESIGNS ARE COPYRIGHT PROTECTED AND MAY NOT BE USED IN WHOLE OR IN PART WITHOUT THE WRITTEN CONSENT OF JSD PROFESSIONAL SERVICES, INC.

File: I:\2013\135576\State Street Campus Lake\SSCL Condition Evaluation\SSCL 2013 - Evaluation.dwg Layout: SL1_Restoration User: gruddell Plotted: Feb 24, 2014 - 2:56pm Xref's:

LEGEND

- VEHICULAR BARRIER GUARDRAIL
- (X) REPAIR ITEM

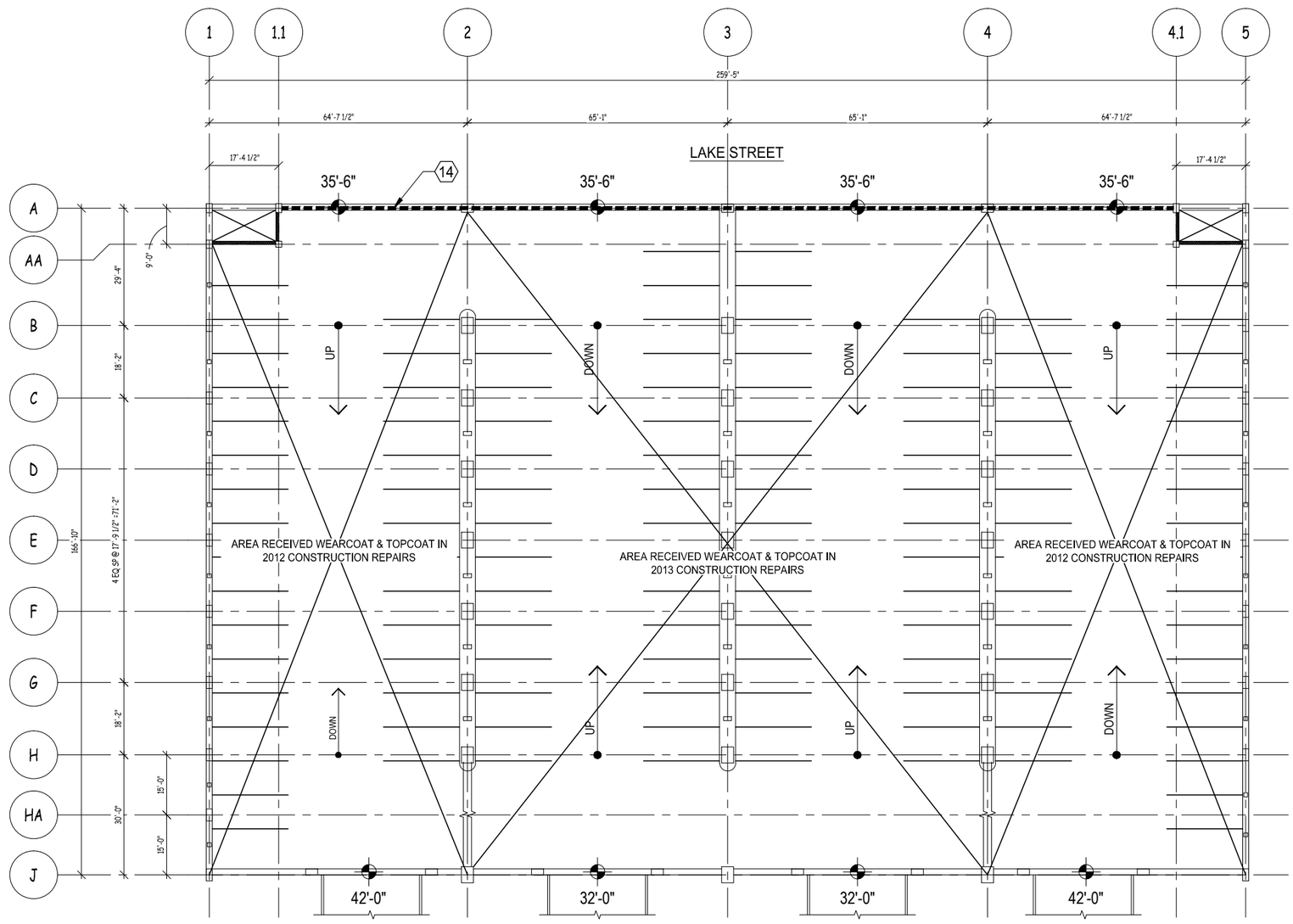

1 / SL2

LEVEL 3 TOPSIDE PLAN

SCALE : 1/32" = 1'-0"

JSD Professional Services, Inc.
• Engineers • Surveyors • Planners

"BUILDING RELATIONSHIPS WITH A COMMITMENT TO CLIENT SATISFACTION THROUGH TRUST, QUALITY AND EXPERIENCE"

- CIVIL ENGINEERING
- SURVEYING & MAPPING
- CONSTRUCTION SERVICES
- WATER RESOURCES
- PLANNING & DEVELOPMENT
- TRANSPORTATION ENGINEERING
- STRUCTURAL ENGINEERING
- LANDSCAPE ARCHITECTURE

MADISON REGIONAL OFFICE
161 HORIZON DRIVE, SUITE 101
VERONA, WISCONSIN 53593
608.848.5060 PHONE | 608.848.2255 FAX

MADISON | MILWAUKEE
KENOSHA | APPLETON

www.jsdinc.com

SERVICES PROVIDED TO:

CITY OF MADISON, PARKING UTILITY

215 MARTIN LUTHER KING JR. BLVD
MADISON, WISCONSIN 53701-2986

PROJECT:

2014 PARKING RAMP RESTORATION

PROJECT LOCATION:

STATE STREET CAMPUS - LAKE

JSD PROJECT NO.: 13-5576

SEAL/SIGNATURE:

ALTHOUGH EVERY EFFORT HAS BEEN MADE IN PREPARING THESE PLANS AND CHECKING THEM FOR ACCURACY, THE CONTRACTOR AND SUBCONTRACTORS MUST CHECK ALL DETAIL AND DIMENSIONS OF THEIR TRADE AND BE RESPONSIBLE FOR THE SAME.

DESIGN: JJE
DRAWN: PGB
APPROVED: JJE

PLAN MODIFICATIONS:	DATE:

DIGGERS HOTLINE
Toll Free (800) 242-8511
Milwaukee Area (414) 259-1181
Hearing Impaired TDD (800) 542-2289
www.DiggersHotline.com

SHEET TITLE:

THIRD LEVEL TOPSIDE PLAN

SHEET NUMBER:

SL2

THESE PLANS AND DESIGNS ARE COPYRIGHT PROTECTED AND MAY NOT BE USED IN WHOLE OR IN PART WITHOUT THE WRITTEN CONSENT OF JSD PROFESSIONAL SERVICES, INC.

File: I:\2013\135576\State Street Campus Lake\SSCL Condition Evaluation\SSCL 2013 – Evaluation.dwg Layout: SL2_Restoration User: gruddell Plotted: Feb 24, 2014 – 2:57pm Xref's:

LEGEND

- VEHICULAR BARRIER GUARDRAIL
- (X) REPAIR ITEM

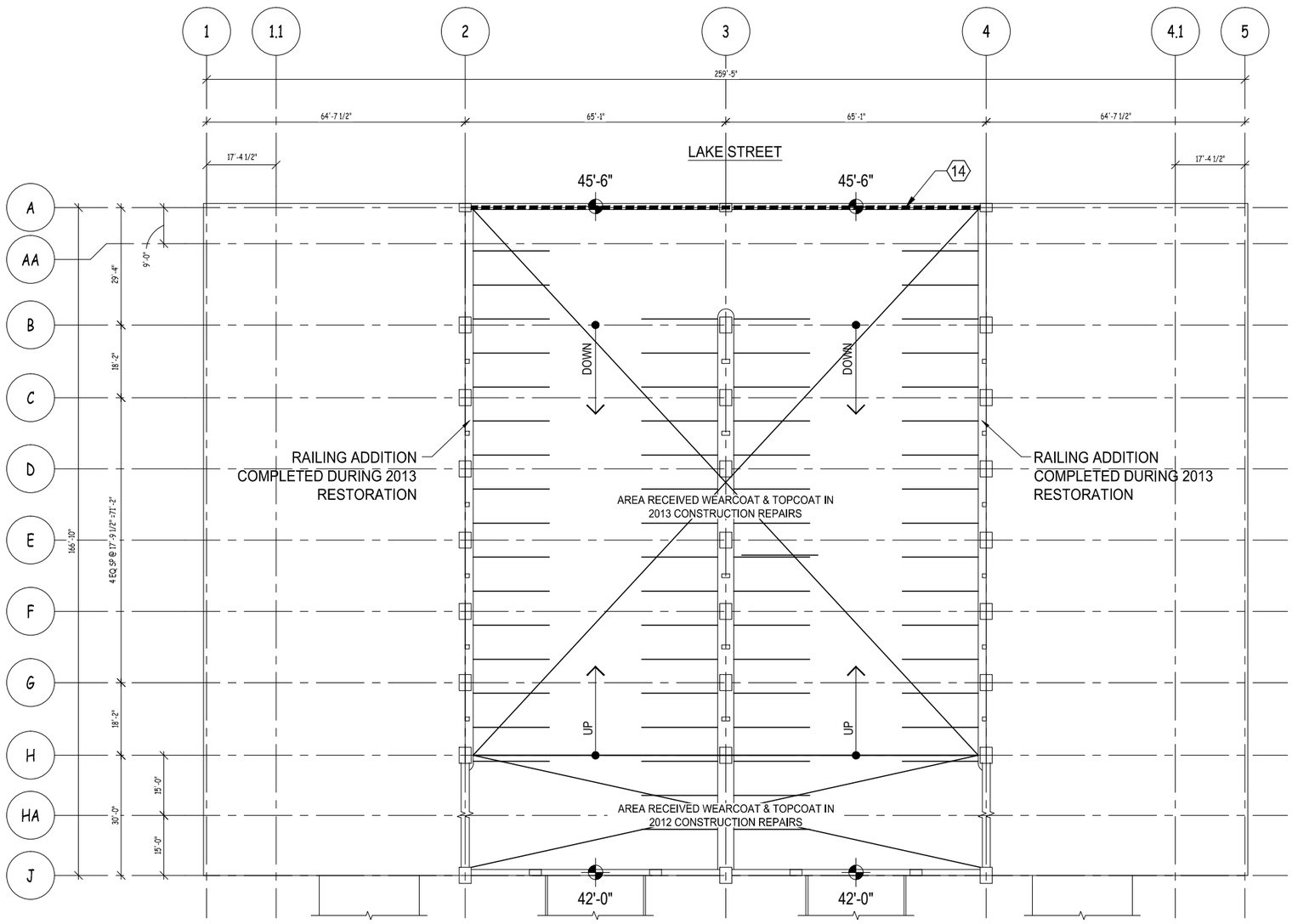

1 / SL3

LEVEL 4 TOPSIDE PLAN

SCALE : 1/32" = 1'-0"

NORTH

LAKE STREET

KEY PLAN

HAWTHORNE COURT

JSD Professional Services, Inc.
• Engineers • Surveyors • Planners

"BUILDING RELATIONSHIPS WITH A COMMITMENT TO CLIENT SATISFACTION THROUGH TRUST, QUALITY AND EXPERIENCE"

- CIVIL ENGINEERING
- SURVEYING & MAPPING
- CONSTRUCTION SERVICES
- WATER RESOURCES
- PLANNING & DEVELOPMENT
- TRANSPORTATION ENGINEERING
- STRUCTURAL ENGINEERING
- LANDSCAPE ARCHITECTURE

MADISON REGIONAL OFFICE
161 HORIZON DRIVE, SUITE 101
VERONA, WISCONSIN 53593
608.848.5060 PHONE | 608.848.2255 FAX

MADISON | MILWAUKEE
KENOSHA | APPLETON

www.jsdinc.com

SERVICES PROVIDED TO:

CITY OF MADISON, PARKING UTILITY

215 MARTIN LUTHER KING JR. BLVD
MADISON, WISCONSIN 53701-2986

PROJECT:

2014 PARKING RAMP RESTORATION

PROJECT LOCATION:

STATE STREET CAMPUS - LAKE

JSD PROJECT NO.: 13-5576

SEAL/SIGNATURE:

ALTHOUGH EVERY EFFORT HAS BEEN MADE IN PREPARING THESE PLANS AND CHECKING THEM FOR ACCURACY, THE CONTRACTOR AND SUBCONTRACTORS MUST CHECK ALL DETAIL AND DIMENSIONS OF THEIR TRADE AND BE RESPONSIBLE FOR THE SAME.

DESIGN:	JJE	
DRAWN:	PGB	
APPROVED:	JJE	

PLAN MODIFICATIONS:	DATE:

DIGGERS HOTLINE
Toll Free (800) 242-8511
Milwaukee Area (414) 259-1181
Hearing Impaired TDD (800) 542-2289
www.DiggersHotline.com

SHEET TITLE:

FORTH LEVEL TOPSIDE PLAN

SHEET NUMBER:

SL3

THESE PLANS AND DESIGNS ARE COPYRIGHT PROTECTED AND MAY NOT BE USED IN WHOLE OR IN PART WITHOUT THE WRITTEN CONSENT OF JSD PROFESSIONAL SERVICES, INC.

File: I:\2013\135576\State Street Campus Lake\SSCL 2013 - Evaluation\SSCL Condition Evaluation\SSCL 2013 - Evaluation.dwg Layout: SL3_Restoration User: gruddell Plotted: Feb 24, 2014 - 2:57pm Xref's:

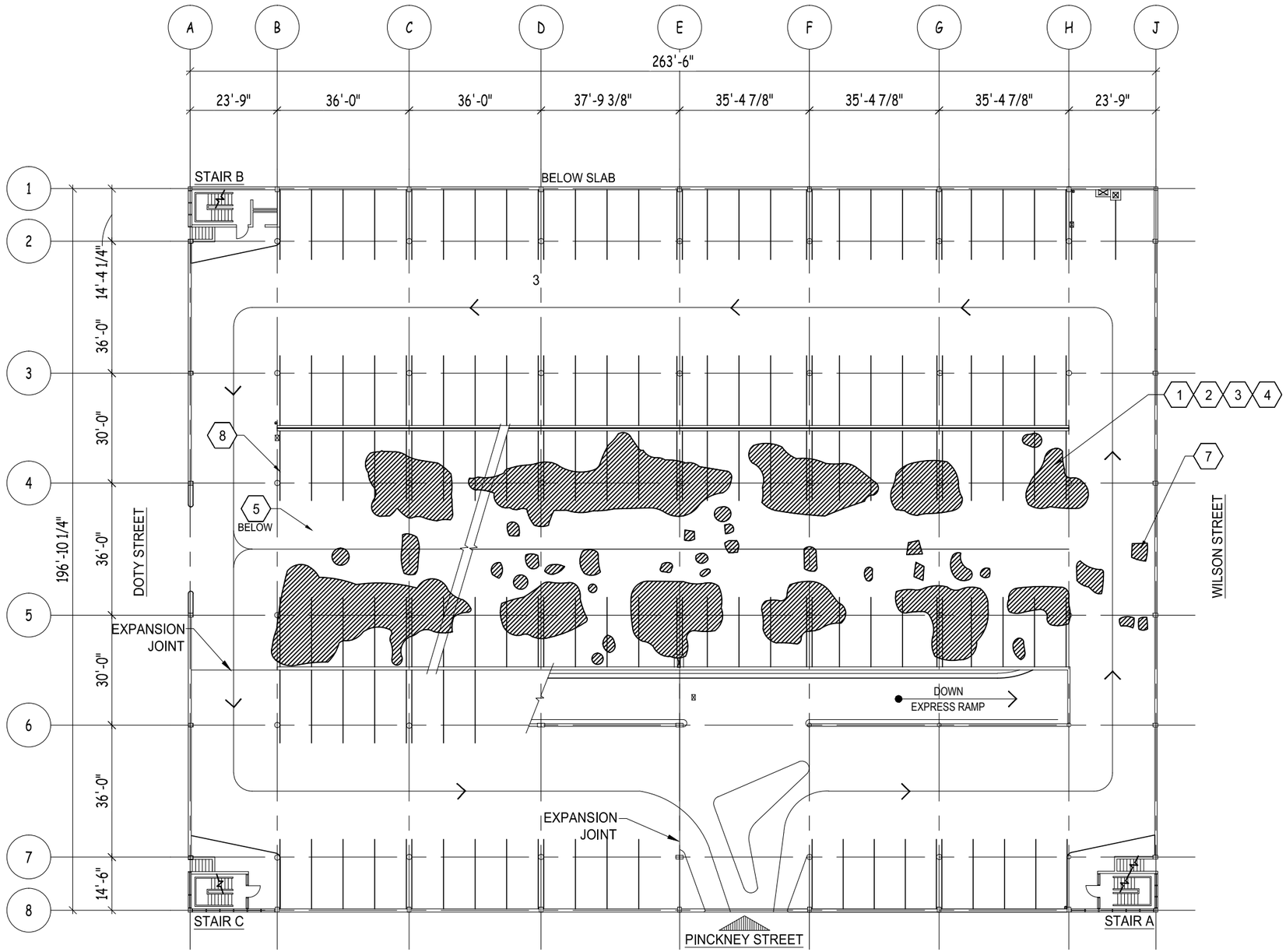

1
GE1

FIRST LEVEL TOPSIDE PLAN

SCALE : 1/32" = 1'-0"

PLAN NORTH

TRUE NORTH

LEGEND

- CONCRETE DELAMINATION
- (X) REPAIR ITEM

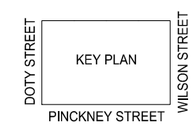

JSD Professional Services, Inc.
• Engineers • Surveyors • Planners

"BUILDING RELATIONSHIPS WITH A COMMITMENT TO CLIENT SATISFACTION THROUGH TRUST, QUALITY AND EXPERIENCE"

- CIVIL ENGINEERING
- SURVEYING & MAPPING
- CONSTRUCTION SERVICES
- WATER RESOURCES
- PLANNING & DEVELOPMENT
- TRANSPORTATION ENGINEERING
- STRUCTURAL ENGINEERING
- LANDSCAPE ARCHITECTURE

MADISON REGIONAL OFFICE
161 HORIZON DRIVE, SUITE 101
VERONA, WISCONSIN 53593
608.848.5060 PHONE | 608.848.2255 FAX

MADISON | MILWAUKEE
KENOSHA | APPLETON

www.jsdinc.com

SERVICES PROVIDED TO:

CITY OF MADISON, PARKING UTILITY

215 MARTIN LUTHER KING JR. BLVD
MADISON, WISCONSIN 53701-2986

PROJECT:

2014 PARKING RAMP RESTORATION

PROJECT LOCATION:

GOVERNMENT EAST

JSD PROJECT NO.: 13-5576

SEAL/SIGNATURE:

ALTHOUGH EVERY EFFORT HAS BEEN MADE IN PREPARING THESE PLANS AND CHECKING THEM FOR ACCURACY, THE CONTRACTOR AND SUBCONTRACTORS MUST CHECK ALL DETAIL AND DIMENSIONS OF THEIR TRADE AND BE RESPONSIBLE FOR THE SAME.

DESIGN:	JJE
DRAWN:	PGB
APPROVED:	JJE

PLAN MODIFICATIONS:	DATE:

DIGGERS HOTLINE
Toll Free (800) 242-8511
Milwaukee Area (414) 259-1181
Hearing Impaired TDD (800) 542-2289
www.DiggersHotline.com

SHEET TITLE:

FIRST LEVEL TOPSIDE PLAN

SHEET NUMBER:

GE1

THESE PLANS AND DESIGNS ARE COPYRIGHT PROTECTED AND MAY NOT BE USED IN WHOLE OR IN PART WITHOUT THE WRITTEN CONSENT OF JSD PROFESSIONAL SERVICES, INC.

File: I:\2013\135576\Government East\GE Condition Evaluation\GE 2013 - Evaluation.dwg Layout: GE1 User: gruddell Plotted: Feb 24, 2014 - 2:59pm Xref's:

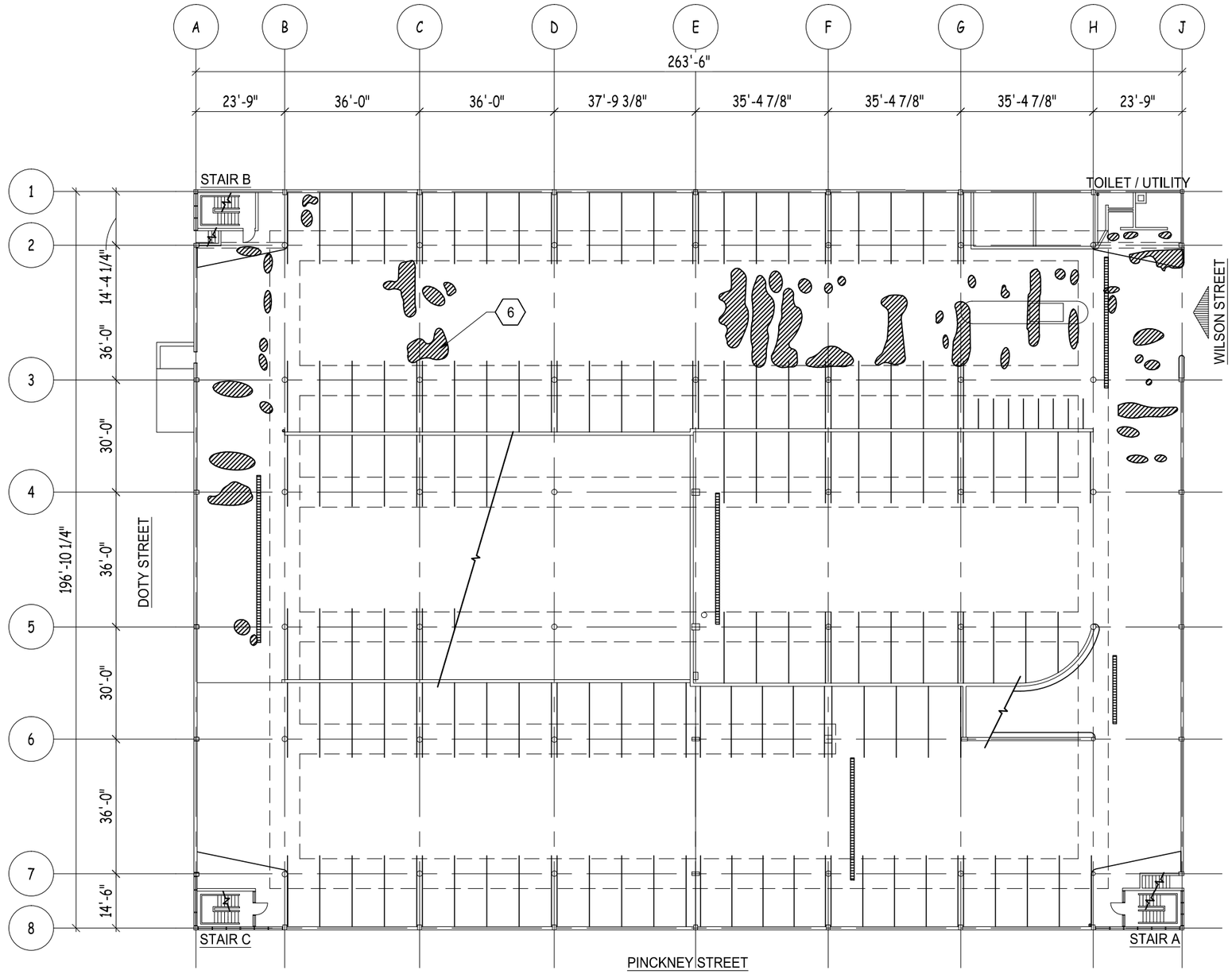

1 / GE2 FIRST LEVEL UNDERSIDE PLAN

SCALE : 1/32" = 1'-0"

PLAN NORTH

TRUE NORTH

LEGEND

- CONCRETE DELAMINATION
- (X) REPAIR ITEM

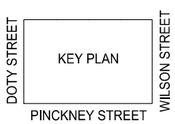

JSD Professional Services, Inc.
• Engineers • Surveyors • Planners

"BUILDING RELATIONSHIPS WITH A COMMITMENT TO CLIENT SATISFACTION THROUGH TRUST, QUALITY AND EXPERIENCE"

- CIVIL ENGINEERING
- SURVEYING & MAPPING
- CONSTRUCTION SERVICES
- WATER RESOURCES
- PLANNING & DEVELOPMENT
- TRANSPORTATION ENGINEERING
- STRUCTURAL ENGINEERING
- LANDSCAPE ARCHITECTURE

MADISON REGIONAL OFFICE
161 HORIZON DRIVE, SUITE 101
VERONA, WISCONSIN 53593
608.848.5060 PHONE | 608.848.2255 FAX
MADISON | MILWAUKEE
KENOSHA | APPLETON
www.jsdinc.com

SERVICES PROVIDED TO:

CITY OF MADISON, PARKING UTILITY

215 MARTIN LUTHER KING JR. BLVD
MADISON, WISCONSIN 53701-2986

PROJECT:

2014 PARKING RAMP RESTORATION

PROJECT LOCATION:

GOVERNMENT EAST

JSD PROJECT NO.: 13-5576

SEAL/SIGNATURE:

ALTHOUGH EVERY EFFORT HAS BEEN MADE IN PREPARING THESE PLANS AND CHECKING THEM FOR ACCURACY, THE CONTRACTOR AND SUBCONTRACTORS MUST CHECK ALL DETAIL AND DIMENSIONS OF THEIR TRADE AND BE RESPONSIBLE FOR THE SAME.

DESIGN:	JJE
DRAWN:	PGB
APPROVED:	JJE

PLAN MODIFICATIONS:	DATE:

DIGGERS HOTLINE
Toll Free (800) 242-8511
Milwaukee Area (414) 259-1181
Hearing Impaired TDD (800) 542-2289
www.DiggersHotline.com

SHEET TITLE:

FIRST LEVEL UNDERSIDE PLAN

SHEET NUMBER:

GE2

© THESE PLANS AND DESIGNS ARE COPYRIGHT PROTECTED AND MAY NOT BE USED IN WHOLE OR IN PART WITHOUT THE WRITTEN CONSENT OF JSD PROFESSIONAL SERVICES, INC.

File: I:\2013\135576\Government East\GE Condition Evaluation\GE 2013 - Evaluation.dwg Layout: GE2 User: gruddell Plotted: Feb 24, 2014 - 2:58pm Xref's:

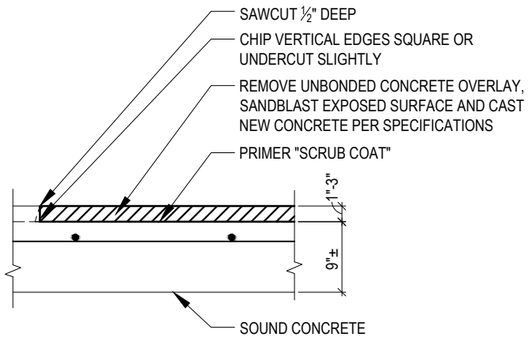

NOTE: REMOVAL OF CONCRETE TO TOP OF UNDERLYING REINFORCING IS AT NO ADDITIONAL CHARGE

1 / D1 TOPSIDE SLAB RESTORATION

SCALE : NTS (UNBONDED OVERLAY)

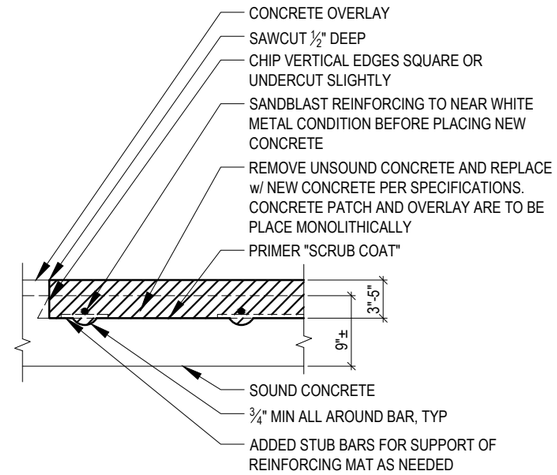

NOTE: REMOVAL OF CONCRETE BELOW SUPPORT BARS IS REQUIRED BY SPECIFICATION. NO ADDITIONAL PAYMENT FOR DEEPER REMOVAL IN THESE AREAS

2 / D1 TOPSIDE SLAB RESTORATION

SCALE : NTS (1 LAYER REINFORCING)

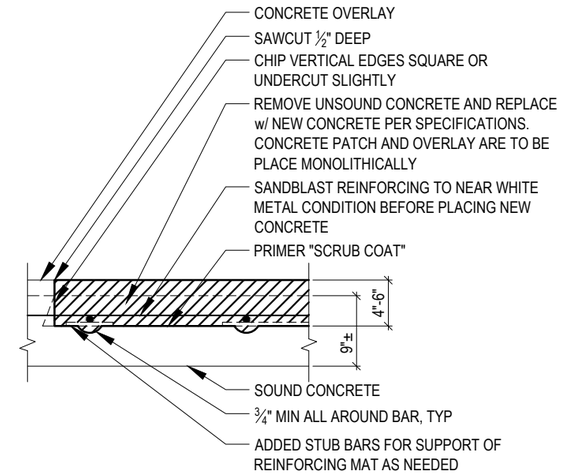

NOTE: REMOVAL OF CONCRETE BELOW SUPPORT BARS IS REQUIRED BY SPECIFICATION. NO ADDITIONAL PAYMENT FOR DEEPER REMOVAL IN THESE AREAS

3 / D1 TOPSIDE SLAB RESTORATION

SCALE : NTS (2 LAYERS REINFORCING)

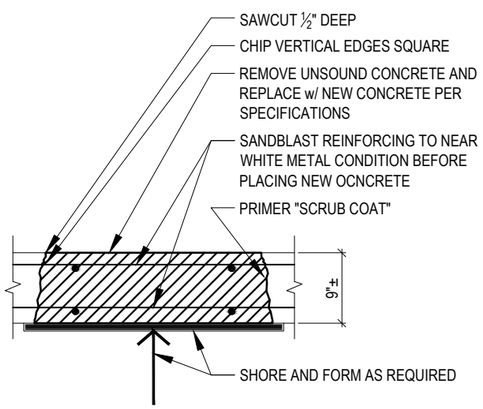

NOTE: REINFORCING SHOWN FOR REFERENCE ONLY. LOCATION AND SPACING TO BE FIELD VERIFIED

4 / D1 FULL DEPTH SLAB REPLACEMENT

SCALE : NTS

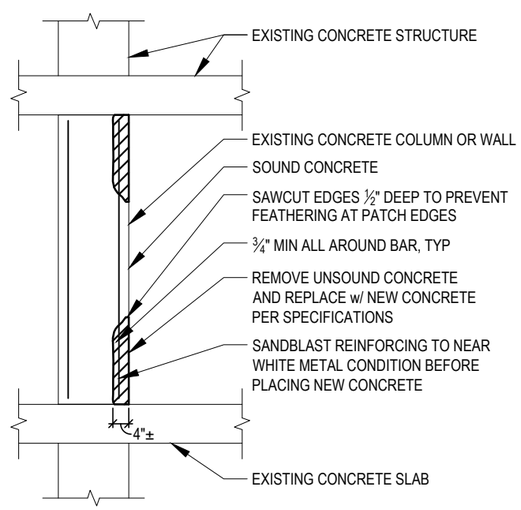

5 / D1 REPAIR AT VERTICAL SURFACES

SCALE : NTS

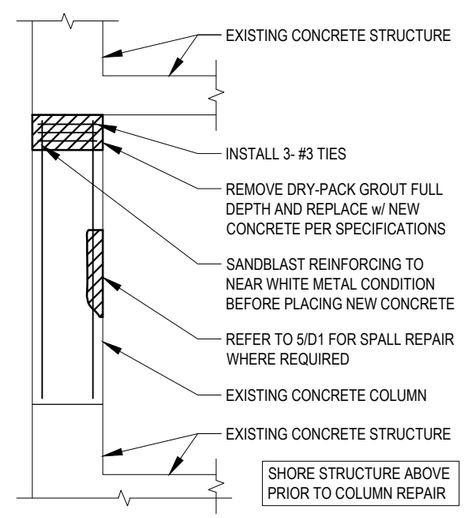

6 / D1 REPAIR AT SSCL COLUMNS

SCALE : NTS

JSD Professional Services, Inc.
• Engineers • Surveyors • Planners

"BUILDING RELATIONSHIPS WITH A COMMITMENT TO CLIENT SATISFACTION THROUGH TRUST, QUALITY AND EXPERIENCE"

- CIVIL ENGINEERING
- SURVEYING & MAPPING
- CONSTRUCTION SERVICES
- WATER RESOURCES
- PLANNING & DEVELOPMENT
- TRANSPORTATION ENGINEERING
- STRUCTURAL ENGINEERING
- LANDSCAPE ARCHITECTURE

MADISON REGIONAL OFFICE
161 HORIZON DRIVE, SUITE 101
VERONA, WISCONSIN 53593
608.848.5060 PHONE | 608.848.2255 FAX

MADISON | MILWAUKEE
KENOSHA | APPLETON

www.jsdinc.com

SERVICES PROVIDED TO:

CITY OF MADISON, PARKING UTILITY

215 MARTIN LUTHER KING JR. BLVD
MADISON, WISCONSIN 53701-2986

PROJECT:

2014 PARKING RAMP RESTORATION

PROJECT LOCATION:

JSD PROJECT NO.: 13-5576

SEAL/SIGNATURE:

ALTHOUGH EVERY EFFORT HAS BEEN MADE IN PREPARING THESE PLANS AND CHECKING THEM FOR ACCURACY, THE CONTRACTOR AND SUBCONTRACTORS MUST CHECK ALL DETAIL AND DIMENSIONS OF THEIR TRADE AND BE RESPONSIBLE FOR THE SAME.

DESIGN:	JEE
DRAWN:	PGB
APPROVED:	JJE

PLAN MODIFICATIONS:	DATE:

DIGGERS HOTLINE
Toll Free (800) 242-8511
Milwaukee Area (414) 259-1181
Hearing Impaired TDD (800) 542-2289
www.DiggersHotline.com

SHEET TITLE:

DETAILS

SHEET NUMBER:

D1

THESE PLANS AND DESIGNS ARE COPYRIGHT PROTECTED AND MAY NOT BE USED IN WHOLE OR IN PART WITHOUT THE WRITTEN CONSENT OF JSD PROFESSIONAL SERVICES, INC.

File: I:\2013\135576\DWG\Title & Detail Sheets\DETAILS.dwg Layout: D1 User: gruddell Plotted: Feb 24, 2014 - 11:38am Xref's:

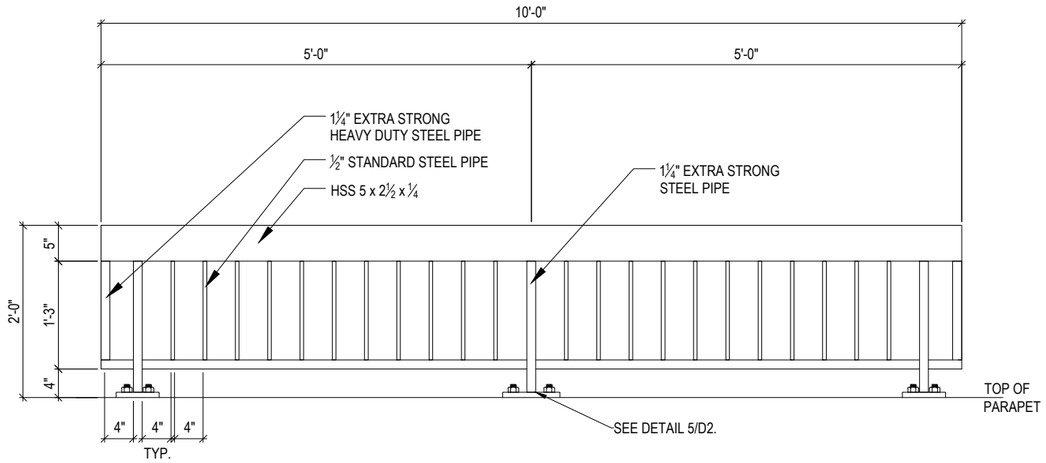

1 / D2 VEHICULAR BARRIER GAURDRAIL

SCALE : NTS (SSCL)

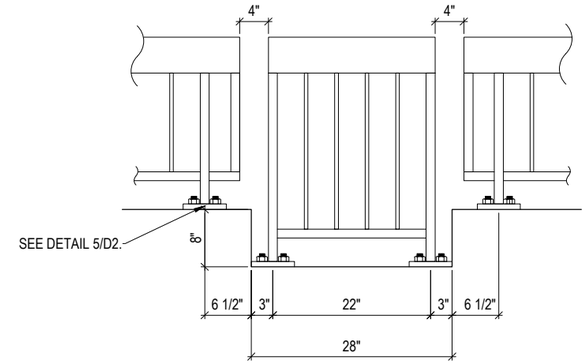

2 / D2 TOP LEVEL - COLUMN GAP GAURDRAIL

SCALE : NTS (SSCo)

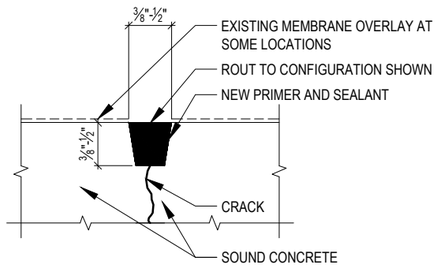

3 / D2 SLAB CRACK REPAIR

SCALE : NTS SLAB JOINT SIMILAR

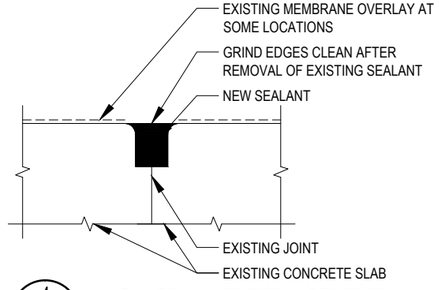

4 / D2 C.J. SEALANT REPLACEMENT

SCALE : NTS SLAB CRACK SIMILAR

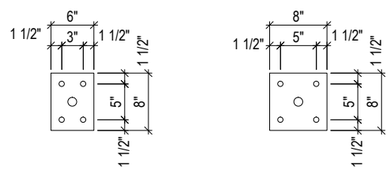

RAIL END BASE PLATE
¾" x 6" x 8" w/4 -¾" Ø
THREADED RODS - EMBED
6" INTO EXISTING PARAPET

RAIL MIDDLE BASE PLATE
¾" x 8" x 8" w/4 -¾" Ø
THREADED RODS-EMBED
6" INTO EXISTING PARAPET

5 / D2 GAURDRAIL BASE PLATES

SCALE : NTS (SSCL)

PLAN
3'-6" X 3'-6" OPENING CUT IN
SLAB FOR . MANWAY BY
PLUMBING CONTRACT. COORDINATE
WITH PLUMBING FOR OPENING LOCATIONS.

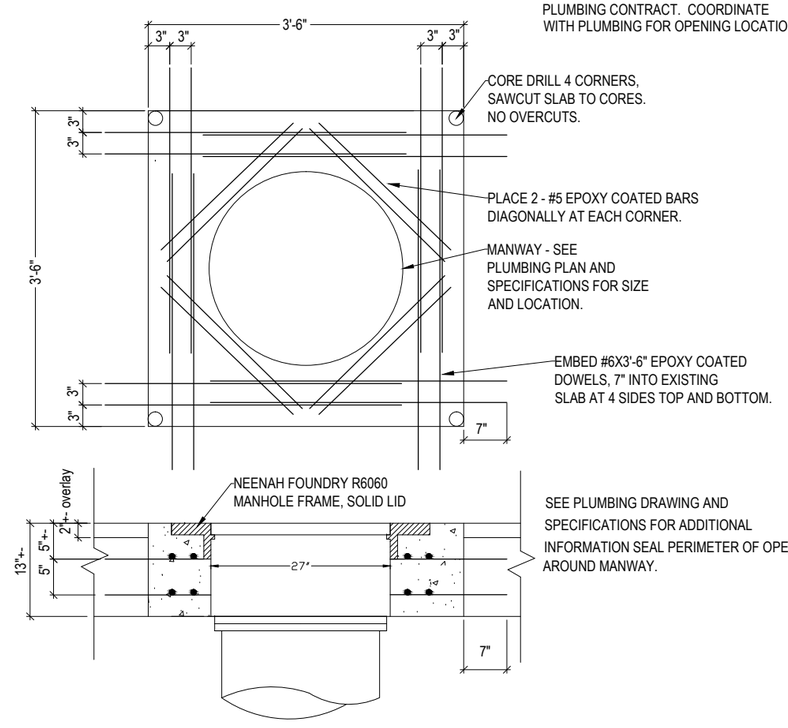

SEE PLUMBING DRAWING AND
SPECIFICATIONS FOR ADDITIONAL
INFORMATION SEAL PERIMETER OF OPENING
AROUND MANWAY.

6 / D2 MANWAY SECTION DETAIL

SCALE : NTS (SSCL)

JSD Professional Services, Inc.
• Engineers • Surveyors • Planners

"BUILDING RELATIONSHIPS WITH A COMMITMENT TO CLIENT SATISFACTION THROUGH TRUST, QUALITY AND EXPERIENCE"

- CIVIL ENGINEERING
- SURVEYING & MAPPING
- CONSTRUCTION SERVICES
- WATER RESOURCES
- PLANNING & DEVELOPMENT
- TRANSPORTATION ENGINEERING
- STRUCTURAL ENGINEERING
- LANDSCAPE ARCHITECTURE

MADISON REGIONAL OFFICE
161 HORIZON DRIVE, SUITE 101
VERONA, WISCONSIN 53593
608.848.5060 PHONE | 608.848.2255 FAX
MADISON | MILWAUKEE
KENOSHA | APPLETON
www.jsdinc.com

SERVICES PROVIDED TO:

CITY OF MADISON, PARKING UTILITY

215 MARTIN LUTHER KING JR. BLVD
MADISON, WISCONSIN 53701-2986

PROJECT:

2014 PARKING RAMP RESTORATION

PROJECT LOCATION:

JSD PROJECT NO.: 13-5576

SEAL/SIGNATURE:

ALTHOUGH EVERY EFFORT HAS BEEN MADE IN PREPARING THESE PLANS AND CHECKING THEM FOR ACCURACY, THE CONTRACTOR AND SUBCONTRACTORS MUST CHECK ALL DETAIL AND DIMENSIONS OF THEIR TRADE AND BE RESPONSIBLE FOR THE SAME.

DESIGN:	JEE
DRAWN:	PGB
APPROVED:	JJE

PLAN MODIFICATIONS:	DATE:

DIGGERS HOTLINE
Toll Free (800) 242-8511
Milwaukee Area (414) 259-1181
Hearing Impaired TDD (800) 542-2289
www.DiggersHotline.com

SHEET TITLE:

DETAILS

SHEET NUMBER:

D2

THESE PLANS AND DESIGNS ARE COPYRIGHT PROTECTED AND MAY NOT BE USED IN WHOLE OR IN PART WITHOUT THE WRITTEN CONSENT OF JSD PROFESSIONAL SERVICES, INC.

File: I:\2013\135576\DWG\Title & Detail Sheets\DETAILS.dwg Layout: D2 User: gruddell Plotted: Feb 25, 2014 - 8:32am Xref's:

GENERAL NOTES: PLUMBING

1. VISIT THE BUILDING SITE AND BECOME THOROUGHLY FAMILIAR WITH ALL EXISTING CONDITIONS AFFECTING THE WORK.
2. VERIFY ALL MEASUREMENTS, PIPE SIZES, PIPE LOCATIONS, ELEVATIONS, ETC. AT SITE.
3. REVIEW DRAWINGS OF ALL OTHER TRADES. COORDINATE THE INSTALLATION AND SCHEDULING OF THE WORK WITH OTHER TRADES TO PREVENT INTERFERENCE WITH THEIR RESPECTIVE INSTALLATION.
4. INSTALL ALL WORK SUBSTANTIALLY AS SHOWN ON THE DRAWINGS. DEVIATIONS FROM LOCATIONS OF PIPING INDICATED ON THE DRAWINGS MAY HAVE TO BE MADE AT NO ADDITIONAL COST TO THE OWNER IN ORDER TO CLEAR THE WORK OF THE OTHER TRADES. HOWEVER, ALL SUCH DEVIATIONS SHALL BE PREVIOUSLY APPROVED BY THE OWNER'S REPRESENTATIVE.
5. PLUMBING CONTRACTOR SHALL BE RESPONSIBLE FOR ALL CUTTING AND PATCHING OF HOLES AND OPENINGS IN EXISTING WALLS AND FLOORS.
6. IT IS THE INTENT OF THESE DRAWINGS THAT A COMPLETE WORKING SYSTEM PROPERLY TESTED, WILL BE OPERATIONAL UPON COMPLETION OF INSTALLATION.
7. WHERE EXISTING PIPING IS REMOVED AND NOT RE-CONNECTED WITH NEW WORK CAP EXISTING SERVICES SO THAT DEAD END PIPE RUNS ARE NOT CREATED.
8. CONFLICT BETWEEN DRAWINGS AND SPECIFICATIONS SHALL BE BROUGHT TO THE ATTENTION OF THE ENGINEER PRIOR TO BID OPENING. THE ENGINEER RESERVES THE RIGHT TO FINAL DECISION.
9. UNLESS NOTED OTHERWISE ALL GRAVITY WASTE PIPING SHALL BE INSTALLED AT A SLOPE OF 1/8" PER FOOT.

GENERAL DEMOLITION & NEW WORK NOTES:

1.) THIS CONTRACTOR SHALL VERIFY THE EXISTING CONDITIONS AT THE PROJECT SITE BEFORE SUBMITTING BID. CONT'R IS ADVISED THAT ALL LOCATIONS ARE APPROXIMATE.

2.) AN ATTEMPT HAS BEEN MADE TO SHOW ALL PIPING, FIXTURES, AND EQUIPMENT. THIS CONTRACTOR SHALL VISIT THE SITE TO VERIFY COMPONENTS, LOCATIONS AND SIZES SHOWN OR NOT SHOWN. ALL COMPONENTS NEED TO BE REMOVED IN THE DEMOLITION AREA UNLESS NOTED ON THE DRAWINGS.

3.) THIS CONTRACTOR SHALL BE RESPONSIBLE FOR HIS OWN DEMOLITION, REMOVAL, CAPPING, STORING, ABANDONING, DISCONNECTING, RELOCATING AND RECONNECTION OF EXISTING EQUIPMENT AND MATERIAL. ALL CUTTING, PATCHING, REPAIRING, REPLACEMENT AND REFINISHING, SHALL MATCH THE EXISTING CONSTRUCTION AS NEARLY AS POSSIBLE.

4.) EXCEPT WHERE OTHERWISE SHOWN OR NOTED ON DRWG. - "TO BE RETAINED, RELOCATED" OR HEREINAFTER NOTED, ALL EXISTING EQUIPMENT AND MATERIAL IN AREAS TO BE REMODELED/ALTERED SHALL BE REMOVED WHERE THEY INTERFERE WITH PROPOSED NEW CONSTRUCTION &/OR INTERFERE W/PROPOSED USAGE OF SPACE BY OWNER AS FOLLOWS:

(A) REMOVE ANY PIPES PROTRUDING ABOVE FINISHED FLOOR OR THROUGH WALL AND CAP

5.) THESE DRAWINGS ARE NECESSARILY DIAGRAMMATIC IN NATURE, NOT ALL FITTINGS, OFFSETS, VENTS, OR DRAINS ARE SHOWN. THE CONTRACTOR SHALL VISIT THE SITE PRIOR TO BIDDING AND INCLUDE ALL FITTINGS, OFFSETS, VENTS, CLEANOUTS AND DRAINS AS REQUIRED TO PROVIDE A COMPLETE AND FUNCTIONING SYSTEM.

6.) ALL PLUMBING PIPE RELATED CUTTING, PATCHING AND/OR REMOVAL AND REPLACEMENT OF EXISTING WALLS, FLOORS & CEILINGS SHALL BE BY P.C.

7.) PATCH ALL HOLES WITH NON-SHRINK GROUT.

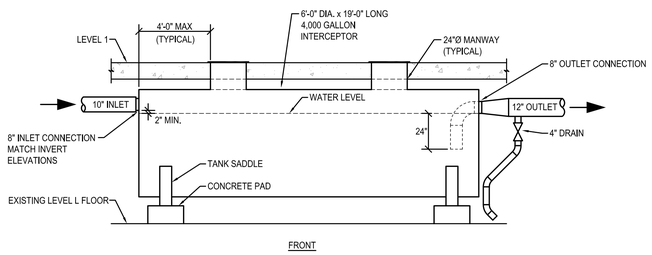

1 SAND INTERCEPTOR DETAIL

NO SCALE

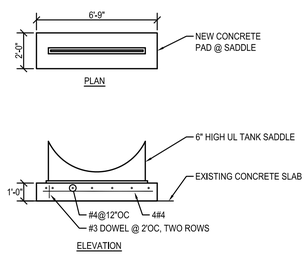

1 CONCRETE SUPPORT FOR SAND INTERCEPTOR

SCALE: 1/4" = 1'-0"

12" 0 1' 5' 10'

PLUMBING ABBREVIATIONS

ABBR	DESCRIPTION
ADW	ABOVE DUCTWORK
AF	ABOVE FLOOR
AFCH	AMERICAN FAMILY CHILDREN'S HOSPITAL
AFF	ABOVE FINISHED FLOOR
AHU	AIR HANDLING UNIT
ALP	ALARM PANEL
AO	AIR OUTLET
AP	ACCESS PANEL
ASC	ABOVE SUSPENDED CEILING
AV	ACID VENT
AW	ACID WASTE
BDW	BELOW DUCTWORK
BF	BELOW FLOOR
BFP	BACKFLOW PREVENTER
BV	BALL VALVE
CB	CATCH BASIN
CI	CAST IRON
CLG	CEILING
CO	CLEANOUT
CO_2	CARBON DIOXIDE
CO_2V	CARBON DIOXIDE RELIEF VENT
CP	CIRCULATION PUMP
CSS	CLINICAL SERVICE SINK
CS	COLD SOFT WATER
CW	COLD WATER
CWV	CLEARWATER VENT
CWW	CLEARWATER WASTE
DF	DRINKING FOUNTAIN
DFU	DRAINAGE FIXTURE UNITS
DN	DOWN
EC	ELECTRICAL CONTRACTOR
EEW	EMERGENCY EYE WASH
EEWS	EMERGENCY EYE WASH/SHOWER
EWC	ELECTRIC WATER COOLER
F	FIRE
FCO	FLOOR CLEANOUT
FD	FLOOR DRAIN
FFA	FROM FLOOR ABOVE
FFB	FROM FLOOR BELOW
FHC	FIRE HOSE CABINET
FIS	FROM INTERSTITIAL SPACE
FPC	FIRE PROTECTION CONTRACTOR
FS	FLOOR SINK
FT	FOOT
FWCO	FINISHED WALL CLEANOUT
G	GAS
GC	GENERAL CONTRACTOR
GO	GAS OUTLET
GPM	GALLONS PER MINUTE
HB	HOSE BIBB
HC	HEATING CONTRACTOR
HD	HUB DRAIN
HW	HOT WATER
HWD	HOT WATER DISPENSER
HWR	HOT WATER RECIRCULATION/RETURN
IE	INVERT ELEVATION
JS	JANITORS SINK
L	LAVATORY (LAV)
LVC	LOCK VALVE CLOSED
LVO	LOCK VALVE OPEN
MA	MEDICAL AIR
MAC	MEDICAL AIR COMPRESSOR
MA-I	MEDICAL AIR INTAKE
MALP	MASTER ALARM PANEL
MB	MOP BASIN
MH	MANHOLE
MV	MEDICAL VACUUM
MV-E	MEDICAL VACUUM EXHAUST
MVP	MEDICAL VACUUM PUMP
N_2	NITROGEN
N_2-V	NITROGEN RELIEF VENT
N_2O-V	NITROUS OXIDE RELIEF VENT
NC	NORMALLY CLOSED
NCC	NITROGEN CONTROL CABINET
NIC	NOT IN CONTRACT
NO	NORMALLY OPEN
N_2O	NITROUS OXIDE
NPCS	NON-POTABLE COLD SOFT WATER
O_2	OXYGEN (O2)
OSD	OPEN SITE DRAIN
PC	PLUMBING CONTRACTOR
PRV	PRESSURE REDUCING VALVE
PSI	POUNDS PER SQUARE INCH
RD	ROOF DRAIN
RM	ROOM
RO	REVERSE OSMOSIS
RPBP	REDUCED PRESSURE BACKFLOW PREVENTER
RV	RELIEF VENT
S	SINK
SAN	SANITARY
SCSK	SCRUB SINK
SFU	SUPPLY FIXTURE UNITS
SH	SHOWER
SS	SANITARY STACK
SVB	BACK SIPHONAGE BACKFLOW VACUUM BREAKER
ST	STORM
SV	STACK VENT
TC	TEMPERATURE CONTROLS
TD	TRENCH DRAIN
TFA	TO FLOOR ABOVE
TFB	TO FLOOR BELOW
TIS	TO INTERSTITIAL SPACE
TMV	THERMOSTATIC MIXING VALVE
TW	TEMPERED WATER PIPING
UR	URINAL
UF	UNDER FLOOR
UWHC	UW HOSPITAL AND CLINIC
V	VENT
VB	VALVE BOX (MEDICAL GAS)
VTR	VENT THRU ROOF
W	WASTE
WAGD	WASTE ANESTHETIC GAS DISPOSAL
WB	WALL BOX
WC	WATER CLOSET
WF	WATER FILTER
WH	WALL HYDRANT
WHA	WATER HAMMER ARRESTOR
WSFU	WATER SUPPLY FIXTURE UNITS

NOTE:
THIS IS A COMPOSITE LIST OF ABBREVIATIONS, NOT ALL PERTAIN SPECIFICALLY TO THIS JOB.

PLUMBING SYMBOL LIST

SYMBOL	DESCRIPTION
	COLD WATER SUPPLY PIPING
	HOT WATER SUPPLY PIPING
	HOT WATER RECIRCULATION/ RETURN
	PIPING /EQUIPMENT TO BE REMOVED
	VENT PIPING
60A	60 PSI COMPRESSED AIR PIPING
225A	225 PSI COMPRESSED AIR PIPING
AV	ACID VENT PIPING
AW	ACID WASTE PIPING
CO2	CARBON DIOXIDE PIPING
CO2-V	CARBON DIOXIDE RELIEF VENT PIPING
CWW	CLEAR WATER WASTE PIPING
CWV	CLEAR WATER VENT PIPING
CS	COLD SOFT WATER PIPING
D	INDIRECT DRAIN
F	FIRE PROTECTION PIPING
NPCS	NONPOTABLE COLD SOFT PIPING
O2	OXYGEN PIPING
RO	REVERSE OSMOSIS WATER PIPING
SAN	SANITARY LINE ABOVE FLOOR
SAN	SANITARY LINE BELOW FLOOR
ST	STORM PIPING
TW	TEMPERED WATER PIPING
	BACKFLOW PREVENTER
	BALANCING VALVE
	BALL VALVE
	BUTTERFLY VALVE
	CHECK VALVE
FCO	CLEANOUT - FLOOR OR YARD
	OUTSIDE SCREW & YOLK (OS&Y) GATE VALVE
	ELBOW TURNED DOWN
	ELBOW TURNED UP
F-1	FIXTURE DESIGNATION & NUMBER
	FLANGED UNION
2"FD-A	FLOOR DRAIN, DESIGNATION NUMBER & SIZE
	FLOW
	FLOW SWITCH
	GATE VALVE
	GLOBE VALVE
	MECHANICAL SHOCK ARRESTOR
	NEW CONNECTION TO EXISTING BEGINNING/END POINT
DN	PIPING DOWN
UP	PIPING UP
	PRESSURE REDUCING VALVE
	SCREWED UNION
	TEE - BOTTOM OUTLET
	TEE - TOP OUTLET
	TEMPERATURE & PRESSURE RELIEF VALVE
	THERMOMETER
WCO	WALL CLEANOUT
WH	WALL HYDRANT
	ZONE VALVE BOX
	EXISTING SPRINKLER HEAD
	NEW CONCEALED SPRINKLER HEAD
	NEW CONCEALED SPRINKLER HEAD WITH GASKET

PLUMBING SHEET INDEX

P000	PLUMBING LEGEND, NOTES AND DETAILS
P100	LEVEL L PLUMBING PLAN - NEW WORK
P100D	LEVEL L PLUMBING PLAN - DEMOLITION
P101	LEVEL 1 PLUMBING PLAN

JSD Professional Services, Inc.
• Engineers • Surveyors • Planners

"BUILDING RELATIONSHIPS WITH A COMMITMENT TO CLIENT SATISFACTION THROUGH TRUST, QUALITY AND EXPERIENCE"

- CIVIL ENGINEERING
- SURVEYING & MAPPING
- CONSTRUCTION SERVICES
- WATER RESOURCES
- PLANNING & DEVELOPMENT
- TRANSPORTATION ENGINEERING
- STRUCTURAL ENGINEERING
- LANDSCAPE ARCHITECTURE

MADISON REGIONAL OFFICE
161 HORIZON DRIVE, SUITE 101
VERONA, WISCONSIN 53593
608.848.5060 PHONE | 608.848.2255 FAX
MADISON | MILWAUKEE
KENOSHA | APPLETON
www.jsdinc.com

Henneman Engineering

Madison:
1232 Fourier Drive, Suite 101
Madison, Wisconsin 53717-1960
T 608.833.7000 F 608.833.6996
Email: info@henneman.com
Website: http://www.henneman.com

© 2009 Henneman Engineering, Inc.

JOB NO. 13-8002

SERVICES PROVIDED TO:

CITY OF MADISON, PARKING UTILITY

215 MARTIN LUTHER KING JR. BLVD
MADISON, WISCONSIN 53701-2986

PROJECT:

2014 PARKING RAMP RESTORATION

PROJECT LOCATION:

STATE STREET CAPITOL

JSD PROJECT NO.: 13-5576

SEAL/SIGNATURE:

ALTHOUGH EVERY EFFORT HAS BEEN MADE IN PREPARING THESE PLANS AND CHECKING THEM FOR ACCURACY, THE CONTRACTOR AND SUBCONTRACTORS MUST CHECK ALL DETAIL AND DIMENSIONS OF THEIR TRADE AND BE RESPONSIBLE FOR THE SAME.

DESIGN:	JJE	
DRAWN:	PGB	
APPROVED:	JJE	

PLAN MODIFICATIONS:	DATE:

DIGGERS HOTLINE
Toll Free (800) 242-8511
Milwaukee Area (414) 259-1181
Hearing Impaired TDD (800) 542-2289
www.DiggersHotline.com

SHEET TITLE:

PLUMBING LEGEND, NOTES AND DETAILS

SHEET NUMBER:

P000

THESE PLANS ARE COPYRIGHT PROTECTED AND MAY NOT BE USED IN WHOLE OR IN PART WITHOUT THE WRITTEN CONSENT OF JSD PROFESSIONAL SERVICES, INC.

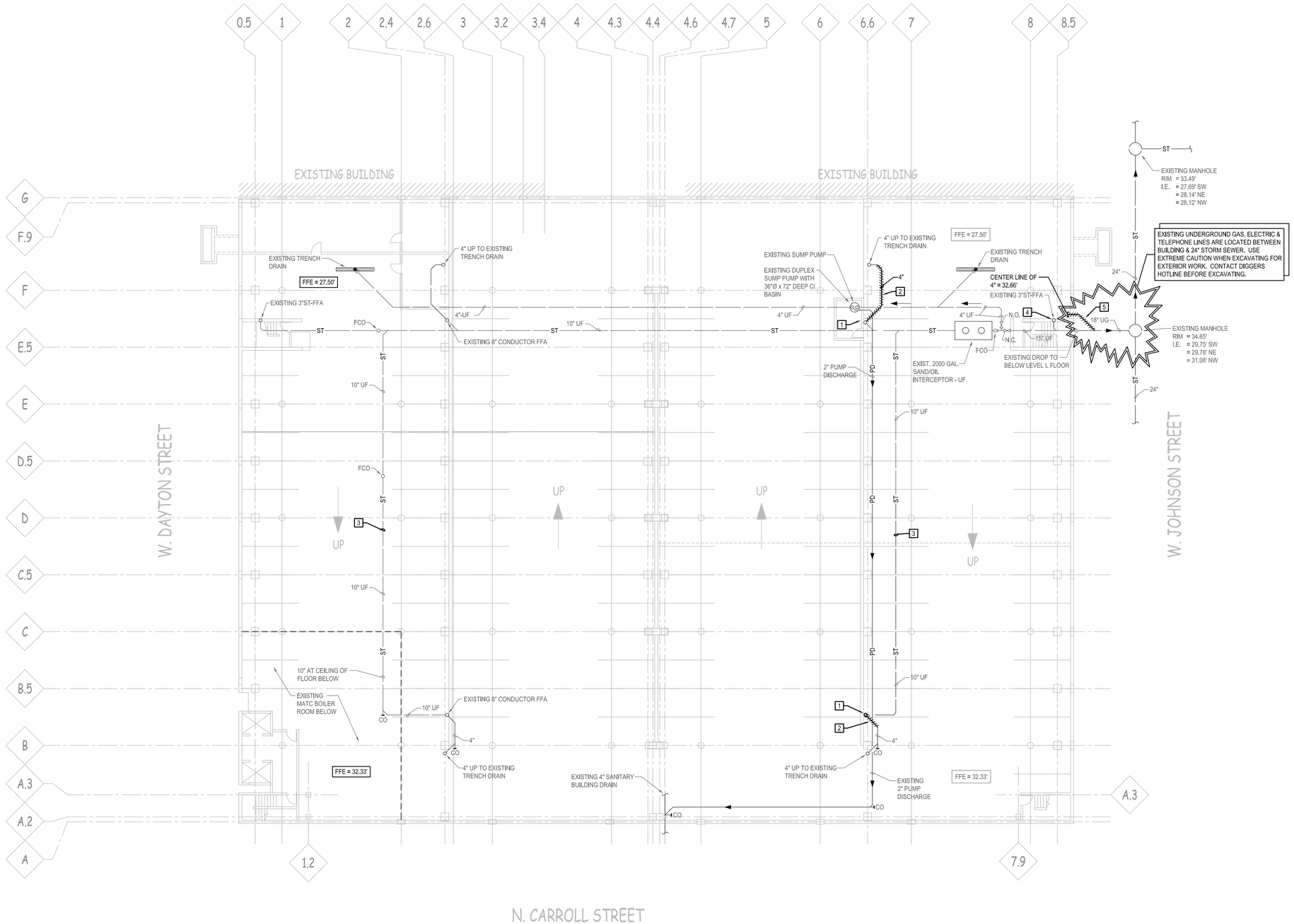

EXISTING UNDERGROUND GAS, ELECTRIC & TELEPHONE LINES ARE LOCATED BETWEEN BUILDING & 24" STORM SEWER. USE EXTREME CAUTION WHEN EXCAVATING FOR EXTERIOR WORK. CONTACT DIGGERS HOTLINE BEFORE EXCAVATING.

GENERAL NOTES (P100D):

1. ALL EXISTING PIPING TO REMAIN EXCEPT AS INDICATED.

KEYED DEMOLITION NOTES (P100D):

1. REMOVE EXISTING 8" VERTICAL CONDUCTOR BETWEEN DECK ABOVE & FLOOR. EXISTING 8" FROM FLOOR ABOVE TO BE RE-USED. CAP EXISTING 8" NEAR FLOOR.
2. REMOVE EXISTING 4" PIPING.
3. EXISTING PIPING TO BE ABANDONED IN PLACE.
4. EXISTING 3" STORM CONDUCTOR FFA TO REMAIN. CAP EXISTING STORM TFB & ABANDON IN PLACE.
5. REMOVE EXISTING 4" STORM.

1 LEVEL L PLUMBING PLAN - DEMOLITION

SCALE: 1/16" = 1'-0"

24" 0 2' 8' 16' 32'

PLAN NORTH

NORTH

JSD Professional Services, Inc.
• Engineers • Surveyors • Planners

"BUILDING RELATIONSHIPS WITH A COMMITMENT TO CLIENT SATISFACTION THROUGH TRUST, QUALITY AND EXPERIENCE"

- CIVIL ENGINEERING
- SURVEYING & MAPPING
- CONSTRUCTION SERVICES
- WATER RESOURCES
- PLANNING & DEVELOPMENT
- TRANSPORTATION ENGINEERING
- STRUCTURAL ENGINEERING
- LANDSCAPE ARCHITECTURE

MADISON REGIONAL OFFICE
161 HORIZON DRIVE, SUITE 101
VERONA, WISCONSIN 53593
608.848.5060 PHONE | 608.848.2255 FAX
MADISON | MILWAUKEE
KENOSHA | APPLETON
www.jsdinc.com

Henneman Engineering

Madison:
1232 Fourier Drive, Suite 101
Madison, Wisconsin 53717-1960
T 608.833.7000 F 608.833.6996
Email: info@henneman.com
Website: http://www.henneman.com
© 2008 Henneman Engineering Inc.
JOB NO. 13-8002

SERVICES PROVIDED TO:

CITY OF MADISON, PARKING UTILITY

215 MARTIN LUTHER KING JR. BLVD
MADISON, WISCONSIN 53701-2986

PROJECT:

2014 PARKING RAMP RESTORATION

PROJECT LOCATION:
STATE STREET CAPITOL

JSD PROJECT NO.: 13-5576

SEAL/SIGNATURE:

ALTHOUGH EVERY EFFORT HAS BEEN MADE IN PREPARING THESE PLANS AND CHECKING THEM FOR ACCURACY, THE CONTRACTOR AND SUBCONTRACTORS MUST CHECK ALL DETAIL AND DIMENSIONS OF THEIR TRADE AND BE RESPONSIBLE FOR THE SAME.

DESIGN:	JJE	
DRAWN:	PGB	
APPROVED:	JJE	

PLAN MODIFICATIONS:	DATE:

DIGGERS HOTLINE
Toll Free (800) 242-8511
Milwaukee Area (414) 259-1181
Hearing Impaired TDD (800) 542-2289
www.DiggersHotline.com

SHEET TITLE:

LEVEL L PLUMBING PLAN - DEMOLITION

SHEET NUMBER:

P100D

THESE PLANS AND SPECIFICATIONS ARE COPYRIGHT PROTECTED AND MAY NOT BE USED IN WHOLE OR IN PART WITHOUT THE WRITTEN CONSENT OF JSD PROFESSIONAL SERVICES, INC.

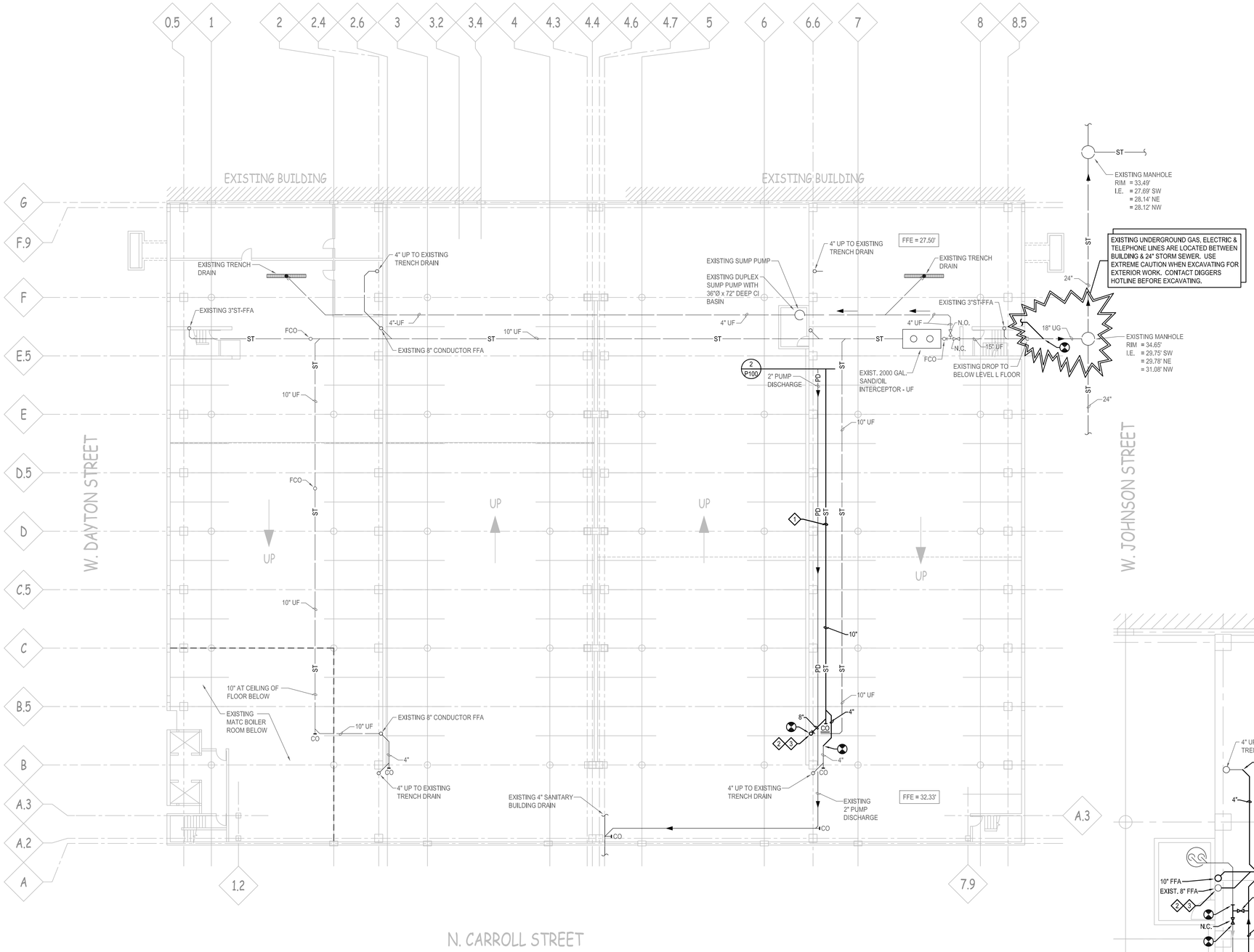

1 LEVEL L PLUMBING PLAN

SCALE: 1/16" = 1'-0"

24" 0 2' 8' 16' 32'

PLAN NORTH

NORTH

GENERAL NOTES (P100):

1. ALL EXISTING PIPING TO REMAIN EXCEPT AS INDICATED.

KEYED NEW WORK NOTES (P100):

1. NEW 8" TIGHT TO CEILING, FOLLOW SLOPE OF STRUCTURE
2. CONNECT TO EXISTING 8" CONDUCTOR FFA.
3. EXISTING 8" CONDUCTOR NEAR FLOOR.

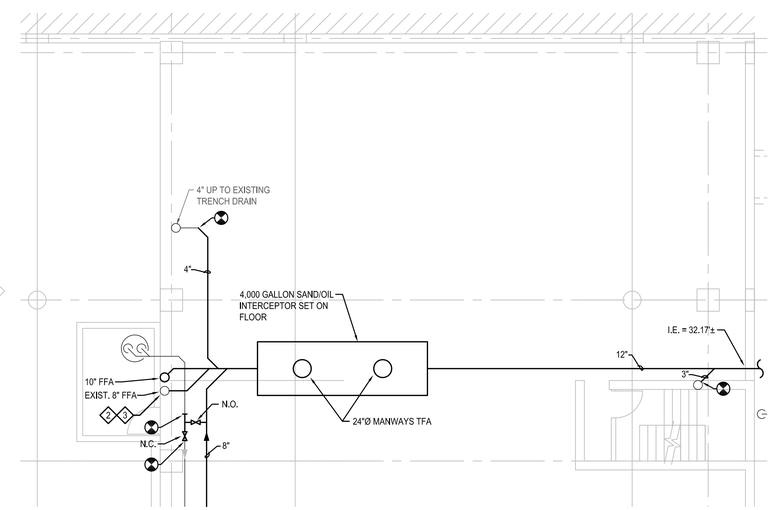

2 ENLARGED LEVEL L PLUMBING PLAN

SCALE: 1/8" = 1'-0"

12" 0 1' 5' 10' 20'

PLAN NORTH

NORTH

JSD Professional Services, Inc.
• Engineers • Surveyors • Planners

"BUILDING RELATIONSHIPS WITH A COMMITMENT TO CLIENT SATISFACTION THROUGH TRUST, QUALITY AND EXPERIENCE"

- CIVIL ENGINEERING
- SURVEYING & MAPPING
- CONSTRUCTION SERVICES
- WATER RESOURCES
- PLANNING & DEVELOPMENT
- TRANSPORTATION ENGINEERING
- STRUCTURAL ENGINEERING
- LANDSCAPE ARCHITECTURE

MADISON REGIONAL OFFICE
161 HORIZON DRIVE, SUITE 101
VERONA, WISCONSIN 53593
608.848.5060 PHONE | 608.848.2255 FAX
MADISON | MILWAUKEE
KENOSHA | APPLETON
www.jsdinc.com

Henneman Engineering

Madison:
1232 Fourier Drive, Suite 101
Madison, Wisconsin 53717-1960
T 608.833.7000 F 608.833.6996
Email: info@henneman.com
Website: http://www.henneman.com
© 2008 Henneman Engineering Inc.
JOB NO. 13-8002

SERVICES PROVIDED TO:

CITY OF MADISON, PARKING UTILITY

215 MARTIN LUTHER KING JR. BLVD
MADISON, WISCONSIN 53701-2986

PROJECT:

2014 PARKING RAMP RESTORATION

PROJECT LOCATION:
STATE STREET CAPITOL

JSD PROJECT NO.: 13-5576

SEAL/SIGNATURE:

ALTHOUGH EVERY EFFORT HAS BEEN MADE IN PREPARING THESE PLANS AND CHECKING THEM FOR ACCURACY, THE CONTRACTOR AND SUBCONTRACTORS MUST CHECK ALL DETAIL AND DIMENSIONS OF THEIR TRADE AND BE RESPONSIBLE FOR THE SAME.

DESIGN: JJE
DRAWN: PGB
APPROVED: JJE

PLAN MODIFICATIONS:	DATE:

DIGGERS HOTLINE
Toll Free (800) 242-8511
Milwaukee Area (414) 259-1181
Hearing Impaired TDD (800) 542-2289
www.DiggersHotline.com

SHEET TITLE:

LEVEL L PLUMBING PLAN

SHEET NUMBER:

P100

THESE PLANS ARE COPYRIGHTED PROPERTY OF JSD PROFESSIONAL SERVICES, INC. REPRODUCTION OF THESE PLANS IN WHOLE OR IN PART WITHOUT THE WRITTEN CONSENT OF JSD PROFESSIONAL SERVICES, INC. IS PROHIBITED.

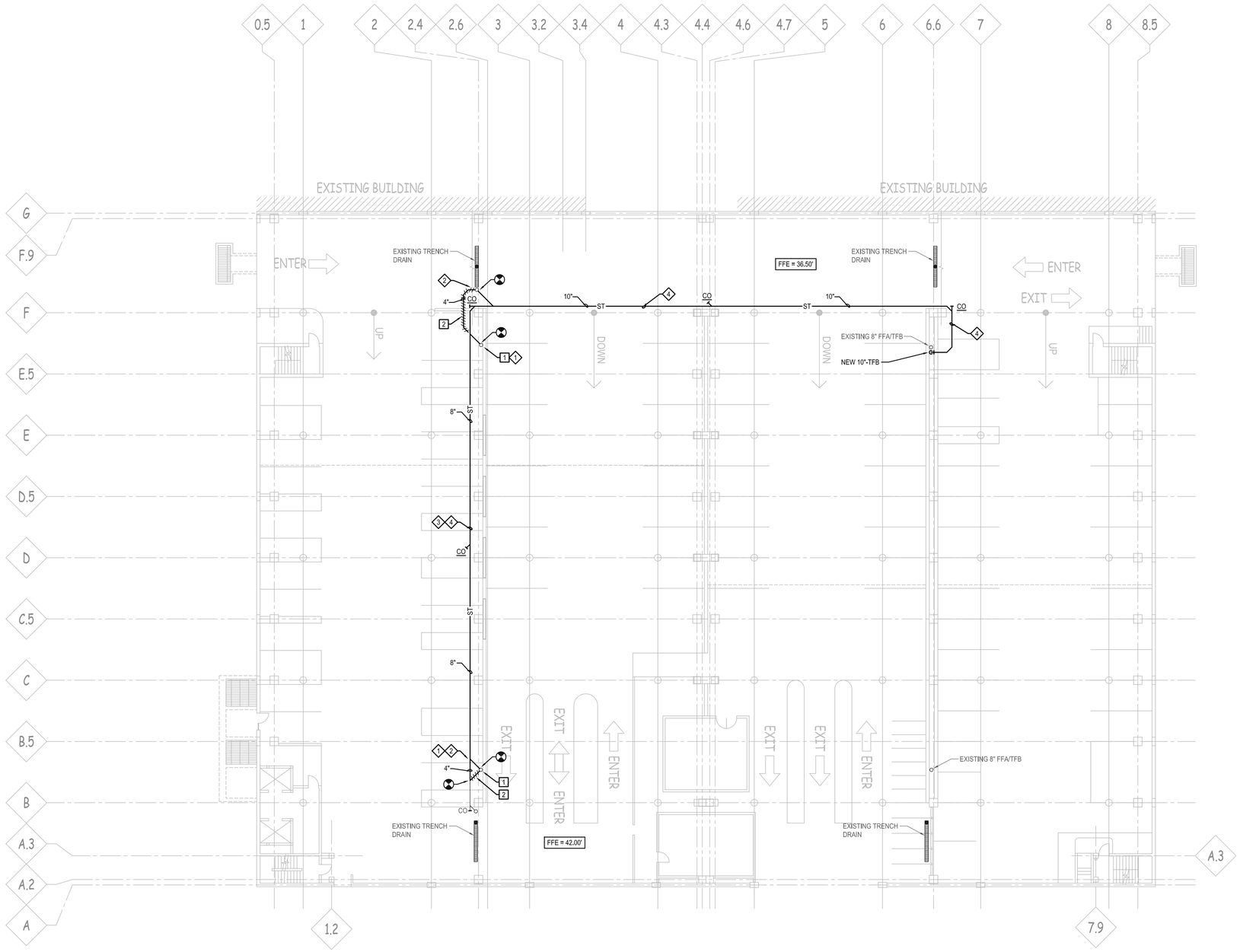

1 LEVEL 1 PLUMBING PLAN

SCALE: 1/16" = 1'-0"

24" 0 2' 8' 16' 32'

GENERAL NOTES (P101):

1. ALL PIPING SHOWN IS RUN AT CEILING.
2. ALL EXISTING PIPING TO REMAIN EXCEPT AS INDICATED.

KEYED DEMOLITION NOTES (P101):

1. REMOVE EXISTING 8" STORM CONDUCTOR FFA. CAP NEAR FLOOR.
2. REMOVE EXISTING 4" STORM PIPING.

KEYED NEW WORK NOTES (P101):

1. CONNECT TO EXISTING 8" STORM FFA.
2. RE-CONNECT EXISTING 4" STORM PIPING FROM FD/TD ON FLOOR ABOVE.
3. FOLLOW SLOPE OF DECK ABOVE.
4. INSTALL AS HIGH AS POSSIBLE.

JSD Professional Services, Inc.
• Engineers • Surveyors • Planners

"BUILDING RELATIONSHIPS WITH A COMMITMENT TO CLIENT SATISFACTION THROUGH TRUST, QUALITY AND EXPERIENCE"

- CIVIL ENGINEERING
- SURVEYING & MAPPING
- CONSTRUCTION SERVICES
- WATER RESOURCES
- PLANNING & DEVELOPMENT
- TRANSPORTATION ENGINEERING
- STRUCTURAL ENGINEERING
- LANDSCAPE ARCHITECTURE

MADISON REGIONAL OFFICE
161 HORIZON DRIVE, SUITE 101
VERONA, WISCONSIN 53593
608.848.5060 PHONE | 608.848.2255 FAX
MADISON | MILWAUKEE
KENOSHA | APPLETON
www.jsdinc.com

Henneman Engineering

Madison:
1232 Fourier Drive, Suite 101
Madison, Wisconsin 53717-1960
T 608.833.7000 F 608.833.6996
Email: info@henneman.com
Website: http://www.henneman.com
© 2009 Henneman Engineering Inc.
JOB NO. 13-8002

SERVICES PROVIDED TO:
CITY OF MADISON, PARKING UTILITY

215 MARTIN LUTHER KING JR. BLVD
MADISON, WISCONSIN 53701-2986

PROJECT:
2014 PARKING RAMP RESTORATION

PROJECT LOCATION:
STATE STREET CAPITOL

JSD PROJECT NO.: 13-5576

SEAL/SIGNATURE:

ALTHOUGH EVERY EFFORT HAS BEEN MADE IN PREPARING THESE PLANS AND CHECKING THEM FOR ACCURACY, THE CONTRACTOR AND SUBCONTRACTORS MUST CHECK ALL DETAIL AND DIMENSIONS OF THEIR TRADE AND BE RESPONSIBLE FOR THE SAME.

DESIGN: JJE
DRAWN: PGB
APPROVED: JJE

PLAN MODIFICATIONS:	DATE:

DIGGERS HOTLINE
Toll Free (800) 242-8511
Milwaukee Area (414) 259-1181
Hearing Impaired TDD (800) 542-2289
www.Diggers-Hotline.com

SHEET TITLE:
LEVEL 1 PLUMBING PLAN

SHEET NUMBER:
P101

THESE PLANS ARE COPYRIGHT PROTECTED AND MAY NOT BE USED IN WHOLE OR IN PART WITHOUT THE WRITTEN CONSENT OF JSD PROFESSIONAL SERVICES, INC.