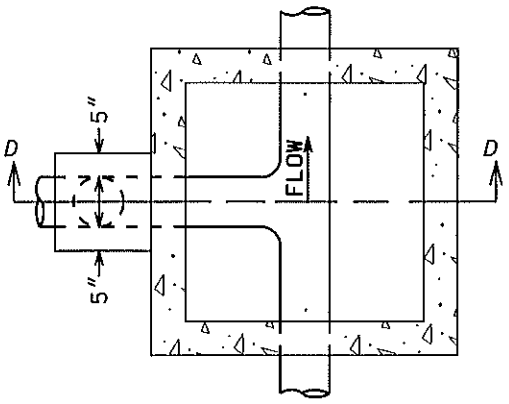

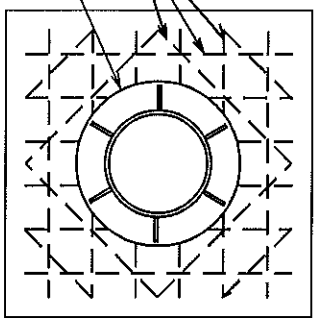

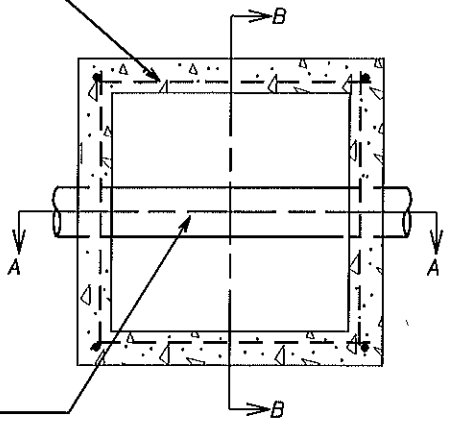

SECTION C - C

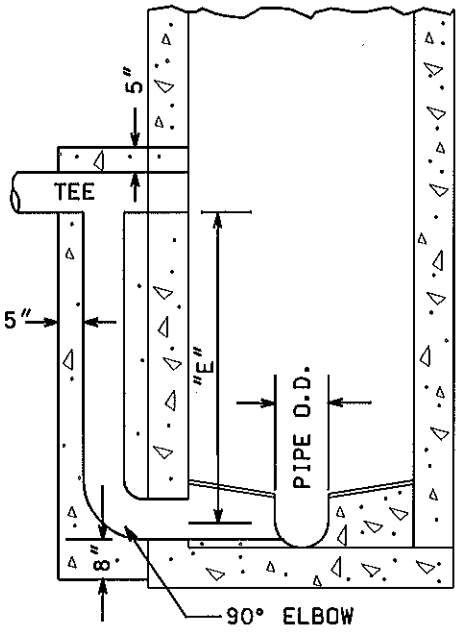

SECTION D - D
DROP INLET CONSTRCUTION FOR
SANITARY SEWER MAINS AND LATERALS

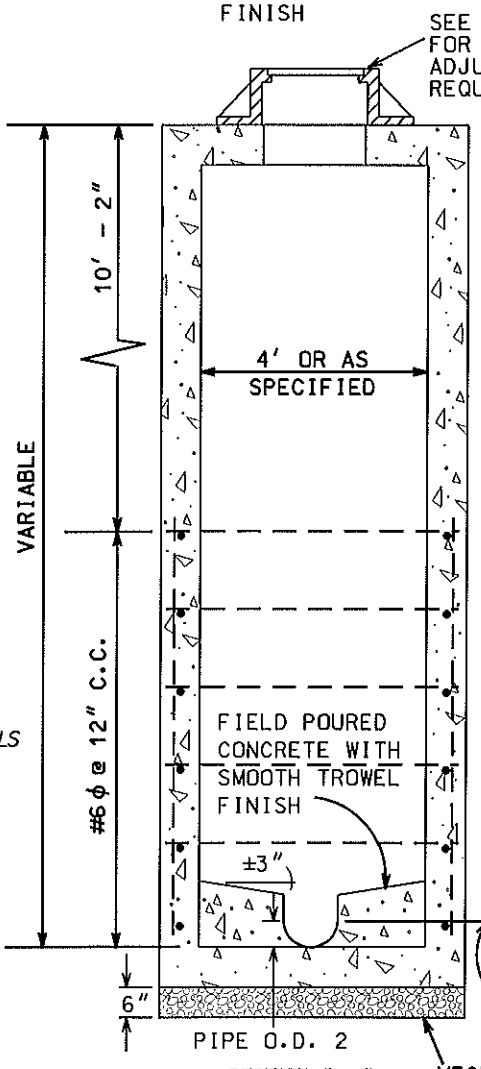

SECTION B - B

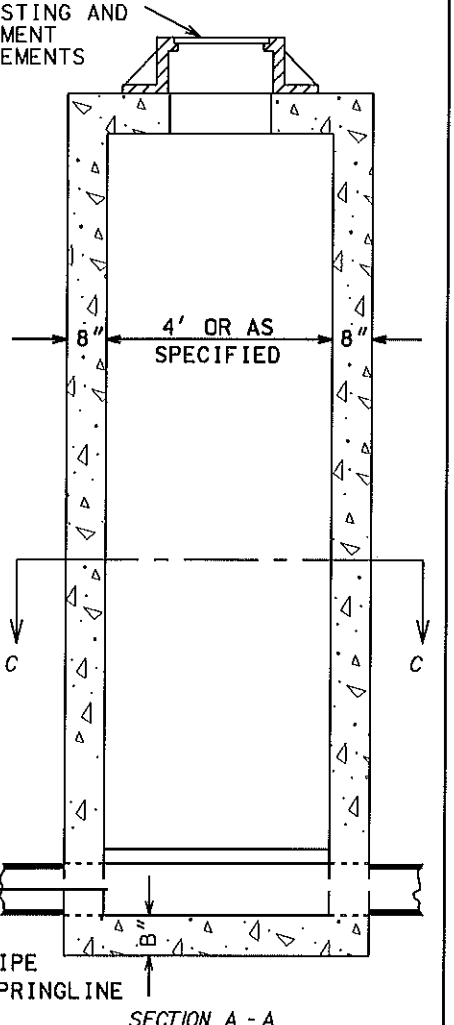

SECTION A - A

NOTES:

DROP INLET TO BE BUILT AT ALL S.A.S. WHEN DISTANCE "E" IS GREATER THAN 24" . "E" SHOULD BE MEASURED FROM INVERT OF INCOMING PIPE TO THE SPRING-LINE OF THE OUTGOING SEWER.

ON 4'X4' & 5'X5' S.A.S., CENTER CASTING ON S.A.S.; ON 6'X6' S.A.S., CENTER OF CASTING TO BE 2' FROM OUTSIDE WALL OF S.A.S..

THICKNESS OF FLOOR (DIMENSION "B") TO BE 8" UP TO 10' DEPTHS & 12" FOR GREATER DEPTHS.

REFER TO STANDARD PLATE 5.7.16 "MADISON STANDARD FRAMES WITH NON-ROCKING COVER" FOR CASTING DESIGNATION.

ROOF THICKNESS SHALL BE 8" MINIMUM UNLESS SPECIFIED OTHERWISE.

2006

CITY OF MADISON
ENGINEERING DIVISION

SANITARY SEWER
CAST-IN-PLACE SAS

STANDARD DETAIL DRAWING 5.7.1