PLOT SCALE: 1 IN:1 FT_XREF
PLOT NAME: ---
REV. DATE: 10/20/2020 7:47 AM
ORIGINATOR: CITY_OF_MADISON

Madison, Wisconsin

CITY OF MADISON
CITY ENGINEERING DIVISION
DEPARTMENT OF PUBLIC WORKS
PLAN OF PROPOSED IMPROVEMENT

SSM FISH HATCHERY ROAD CLINIC & CSM TERRACE RESTORATION ONLY

CITY PROJECT NO. 12948
CONTRACT NO. 8894

INDEX OF SHEETS

SHEET NO.	1	TITLE
SHEET NO.	D1	GENERAL NOTES
SHEET NO.	D2	TYPICAL SECTIONS
SHEET NO.	P1-P3	SIDEWALK PLAN & PROFILE
SHEET NO.	M1-M2	PAVEMENT MARKING
SHEET NO.	E1-E2	ELECTRICAL PLAN
SHEET NO.	L1-L2	LANDSCAPE PLAN

CITY MAINTENANCE
PLAN NOT REQUIRED

PROJECT LOCATION

CEDAR STREET, SOUTH STREET, & HIGH STREET PLANS (SEE PROJECT NO. 11866 & 12956, CONTRACT NO. 8504 & 8559)

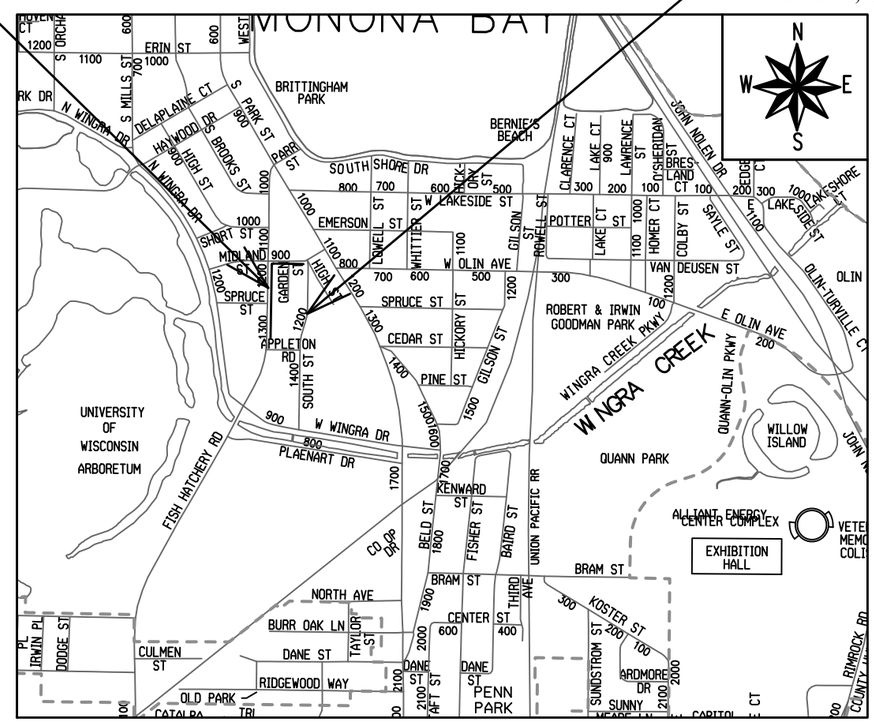

CONVENTIONAL SIGNS
FIELD VERIFY ALL UTILITY LOCATIONS

GAS	G
STORM SEWER	ST
SANITARY SEWER	SAN
WATER	W
BURIED ELECTRIC	E
OVERHEAD ELECTRIC	OH
POWER POLE	
ADA COMPLIANT RAMP W/ DETECTABLE WARNING FIELD	
COMBUSTIBLE FLUIDS	

NOTES:

ALL GUTTERS SHALL DRAIN WITH A MINIMUM GRADE OF 0.50% TOWARD STORM SEWER INLETS.

SIDEWALK RAMPS SHALL HAVE A MAXIMUM SLOPE OF 1" PER 12". SIDEWALK AND CURB RAMPS SHALL BE CONSTRUCTED WITH A SIDE SLOPE OF 2.00%. SIDEWALK SHALL HAVE A MINIMUM LONGITUDINAL SLOPE OF 0.50% AND A MAXIMUM LONGITUDINAL SLOPE OF 5.00% EXCEPT WHERE STREET GRADES EXCEED 5.00%.

PUBLIC IMPROVEMENT PROJECT APPROVED

APPROVED DATE: May 5, 2020

BY THE COMMON COUNCIL OF MADISON, WISCONSIN

PUBLIC IMPROVEMENT DESIGN APPROVED BY:

City Engineer — Date

STREET DESIGNED BY:

STORM SEWER DESIGNED BY:

PAVEMENT MARKING DESIGNED BY:

LIGHTING DESIGNED BY:

THE LOCATION AND INFORMATION FOR PROPOSED NEW TREES, IN THE PUBLIC RIGHT OF WAY OR ON PUBLIC LANDS ARE APPROXIMATE AND ARE SHOWN FOR REFERENCE ONLY. THE LOCATIONS, SPECIFICATIONS AND PLANTING METHODS OF ALL PROPOSED NEW OR REPLACEMENT TREES IN THE PUBLIC RIGHT OF WAY OR ON PUBLIC LANDS SHALL BE APPROVED BY THE CITY FORESTER PRIOR TO INSTALLATION.

NO TREES IN THE RIGHT OF WAY OR ON PUBLIC LANDS SHALL BE TRIMMED, PRUNED, REMOVED OR ADVERSELY AFFECTED IN ANY WAY UNTIL THE DEVELOPER HAS RECEIVED WRITTEN PERMISSION FROM THE CITY ENGINEER OR CITY FORESTER. SAID WRITTEN PERMISSION SHALL INCLUDE LANGUAGE INDICATING THAT SECTION 10.101 OF THE MADISON GENERAL ORDINANCES AND ADMINISTRATIVE PROCEDURE MEMORANDUM NO. 6-2, REFERING TO NOTIFICATION OF PROPERTY OCCUPANTS AND/OR OWNERS, HAS BEEN COMPLIED WITH.

DEVELOPER MUST SUBMIT A TRAFFIC CONTROL PLAN TO CITY TRAFFIC ENGINEERING AT LEAST 14 DAYS PRIOR TO THE START OF WORK. WORK SHALL NOT PROCEED UNTIL AN APPROVED TRAFFIC CONTROL PLAN IS IN PLACE.

ALL PAVEMENT IN THE MIDLAND STREET RIGHTS-OF-WAY SHALL BE TYPE B PAVEMENT PER STANDARD DETAIL DRAWING 4.02.

ALL PAVEMENT IN THE FISH HATCHERY ROAD RIGHT-OF-WAY SHALL BE TYPE C PAVEMENT PER STANDARD DETAIL DRAWING 4.02.

UNDERDRAINS SHALL BE INSTALLED PER STANDARD DETAIL DRAWING 4.05 FOR 75' ON EACH SIDE OF THE LOW POINT, OR TO THE NEAREST CURB HIGH POINT. ALL UNDERDRAIN SHALL BE WRAPPED.

ALL GUTTERS SHALL DRAIN WITH A MINIMUM GRADE OF 0.5% TOWARD STORM SEWER INLETS.

ALL DITCHES SHALL DRAIN WITH A MINIMUM GRADE OF 0.5%

THE CROSS SLOPE OF SIDEWALKS AND BARRIER FREE SIDEWALK CURB RAMPS SHALL TYPICALLY BE 1.5%. THE LONGITUDINAL GRADE OF BARRIER FREE SIDEWALK CURB RAMPS SHALL NOT EXCEED 8.33%. ALL SIDEWALK RAMPS SHALL BE CONSTRUCTED ACCORDING TO S.D.D. 3.04. AT ALL OTHER LOCATIONS THE LONGITUDINAL GRADE OF SIDEWALKS SHALL NOT EXCEED 5.0 % OR THE ADJACENT STREET GRADE WHICHEVER IS GREATER NOR BE LESS THAN 0.5% AND SHALL DRAIN TOWARD STORM SEWER INLETS. SIDE SLOPES WITHIN TEN FEET OF A PUBLIC SIDEWALK SHALL NOT EXCEED 4:1. ALL SIDEWALK AND SIDEWALK RAMP ELEVATIONS AND GRADES SHALL BE FIELD VERIFIED AND SET TO COMPLY WITH THE CITY OF MADISON STANDARD SPECIFICATIONS AND THE A.D.A. GUIDELINES.

OBTAIN A PRINT OUT OF THE ALIGNMENTS FROM THE CITY PROJECT ENGINEER PRIOR TO STAKING THIS PROJECT.

*CURB STATION AND OFFSETS SHALL BE TO THE **EDGE OF PAVEMENT** UNLESS OTHERWISE INDICATED. CURB ELEVATIONS SHALL BE TO THE **EDGE OF PAVEMENT** UNLESS OTHERWISE INDICATED.*

POWER POLES AND OTHER OBSTRUCTIONS SHALL BE MOVED TO PROVIDE 2 FEET MINIMUM OF CLEAR DISTANCE FROM ANY FACE OF CURB OR EDGE OF SIDEWALK.

ANY INFORMATION SHOWN ON THIS PLAN, WHICH IS NOT PART OF THIS RIGHT-OF-WAY PROJECT, IS PRELIMINARY AND NOT FOR CONSTRUCTION.

THERE MAY BE EXISTING UTILITIES OR OTHER FEATURES WHICH ARE EITHER NOT SHOWN OR SHOWN INCORRECTLY ON THIS PLAN. IT IS THE RESPONSIBILITY OF THE DEVELOPER TO LOCATE AND IDENTIFY ALL UTILITIES AND TOPOGRAPHY WHICH MAY AFFECT THE CONSTRUCTION OF THESE IMPROVEMENTS.

ALL PERMANENT SIGNING AND POSTING WILL BE DETERMINED AND PROVIDED BY THE TRAFFIC ENGINEERING DIVISION, FOLLOWING CONSTRUCTION OF THESE IMPROVEMENTS.

THE DEVELOPER SHALL PROVIDE, INSTALL AND MAINTAIN ALL STREET END BARRICADES, SIGNING AND TRAFFIC CONTROL, AS REQUIRED BY THE CITY TRAFFIC ENGINEER.

PAVEMENT SAWCUTS SHALL BE AS DIRECTED BY THE CITY CONSTRUCTION ENGINEER. SAWCUTS SHOWN ON THE PLAN ARE APPROXIMATE.

ALL WORK IN THE RIGHT OF WAY AND PUBLIC EASEMENTS SHALL BE IN ACCORDANCE WITH THE CITY OF MADISON STANDARD SPECIFICATIONS FOR PUBLIC WORKS CONSTRUCTION

MARK	REVISION	DATE	BY
---	---	---	---

Designed By: AJZ
Date: 9/23/2020 1:53 PM
Scale: ########
D-1

12948

MADISON, WI

CONTRACT NO: 8894

GENERAL NOTES

SSM FISH HATCHERY RIAD CLINIC & CSM

M:\DESIGN\Projects\12948\CAD\Plan Sheets\12948EN-Notes.dwg

12948

D-1

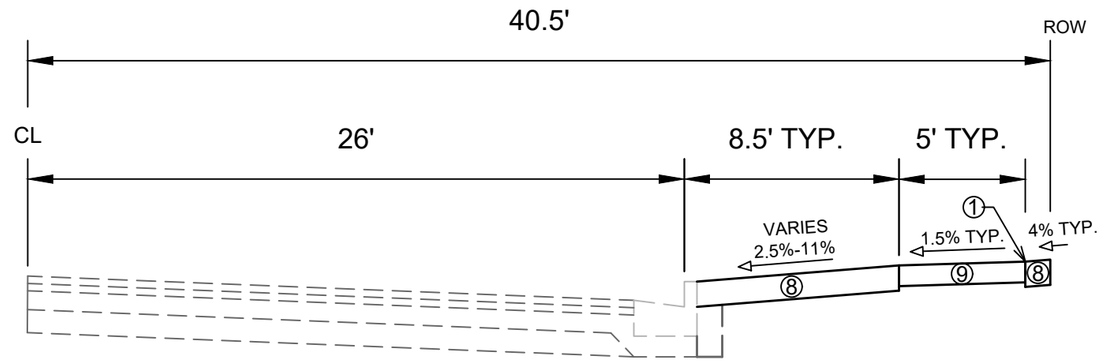

TYPICAL SECTION
FISH HATCHERY ROAD SIDEWALK RIGHT
STA 100+98.49 TO STA 108+35.07

① POINT REFERRED TO ON PLAN
⑦ FILL INCIDENTAL TO CURB AND GUTTER INSTALLATION
⑧ RESTORE DISTURBED AREAS W/ 6" TOPSOIL, SEED, AND EROSION MATTING
⑨ 5" CONCRETE SIDEWALK

SPECIAL NOTES:

- TYPICAL SECTION NOT TO SCALE

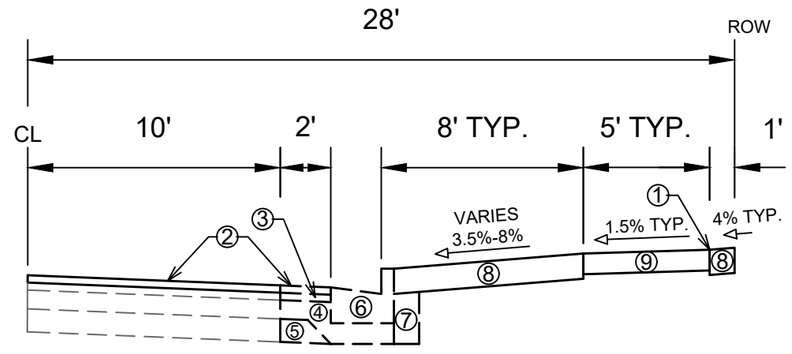

TYPICAL SECTION
MIDLAND STREET SIDEWALK RIGHT
STA 200+37.66 TO STA 203+50.00

① POINT REFERRED TO ON PLAN
② 2.00" HMA PAVEMENT, TYPE 4 LT 58-28 S (UPPER LAYER)
③ 2.50" HMA PAVEMENT, TYPE 3 LT 58-28 S (LOWER LAYER)
④ 6" GRADATION 2 CRUSHED AGGREGATE BASE COURSE (UPPER LAYER)
⑤ 6" GRADATION 1 CRUSHED AGGREGATE BASE COURSE (LOWER LAYER)
⑥ CONCRETE CURB AND GUTTER TYPE 'A', SEE P-SHEETS FOR LOCATIONS
⑦ FILL INCIDENTAL TO CURB AND GUTTER INSTALLATION
⑧ RESTORE DISTURBED AREAS W/ 6" TOPSOIL, SEED, AND EROSION MATTING
⑨ 5" CONCRETE SIDEWALK

SPECIAL NOTES:

- TYPICAL SECTION NOT TO SCALE

MARK	REVISION	Date: 9/23/2020 1:53 PM	BY
---	---	---	---

Designed By: ###
Scale: ##########
12948
D-2

12948
MADISON, WI
8894
CONTRACT NO:

TYPICAL SECTIONS
SSM FISH HATCHERY RIAD CLINIC & CSM
M:\DESIGN\Projects\12948\CAD\Plan Sheets\12948EN-Typicals.dwg

CITY OF MADISON WISCONSIN

12948
D-2

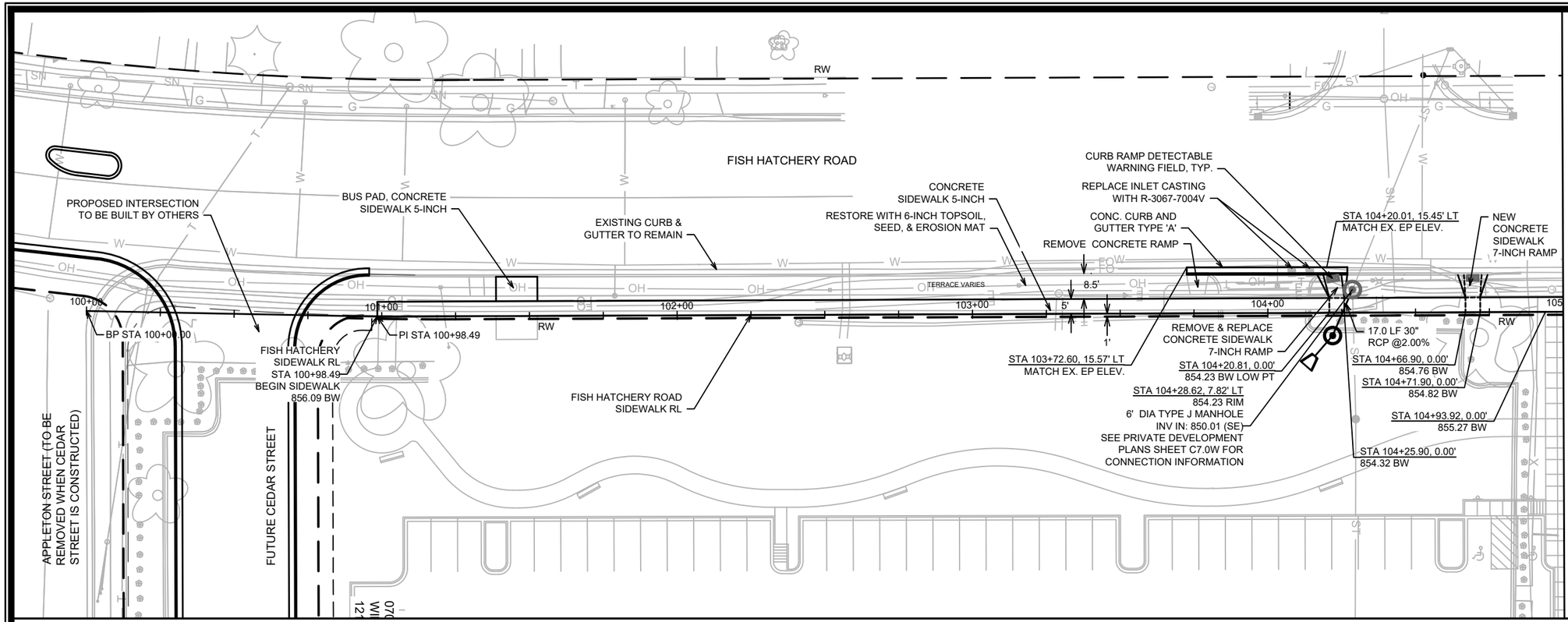

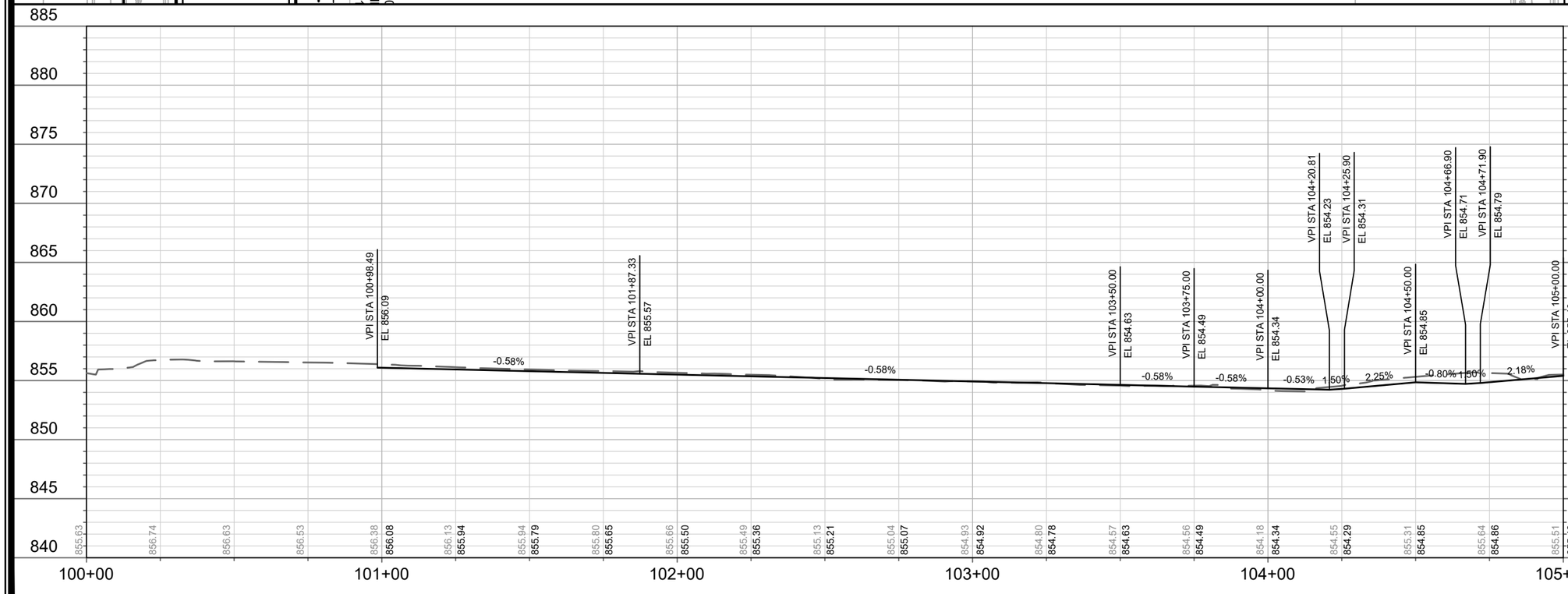

MARK	REVISION	DATE	BY
---	---	---	---

Designed By: AJZ
Date: 10/13/2020 11:10 AM
Scale: 1" = 40'
12948
P-1

12948
MADISON, WI
8894
CONTRACT NO:

FISH HATCHERY ROAD SIDEWALK PLAN & PROFILE
SSM FISH HATCHERY RIAD CLINIC & CSM

M:\DESIGN\Projects\12948\CAD\Plan Sheets\12948EN-PnP SW Fish Hatch&Midland.dwg

CITY OF MADISON WISCONSIN

12948
P-1

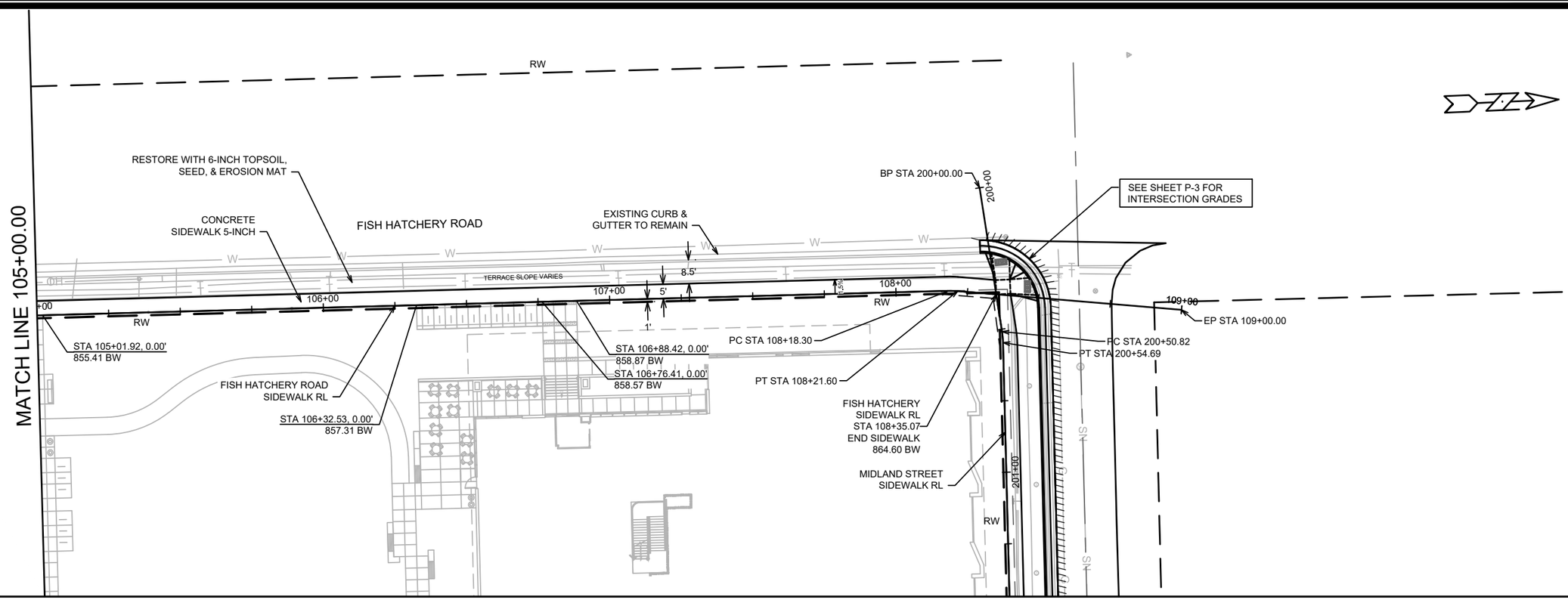

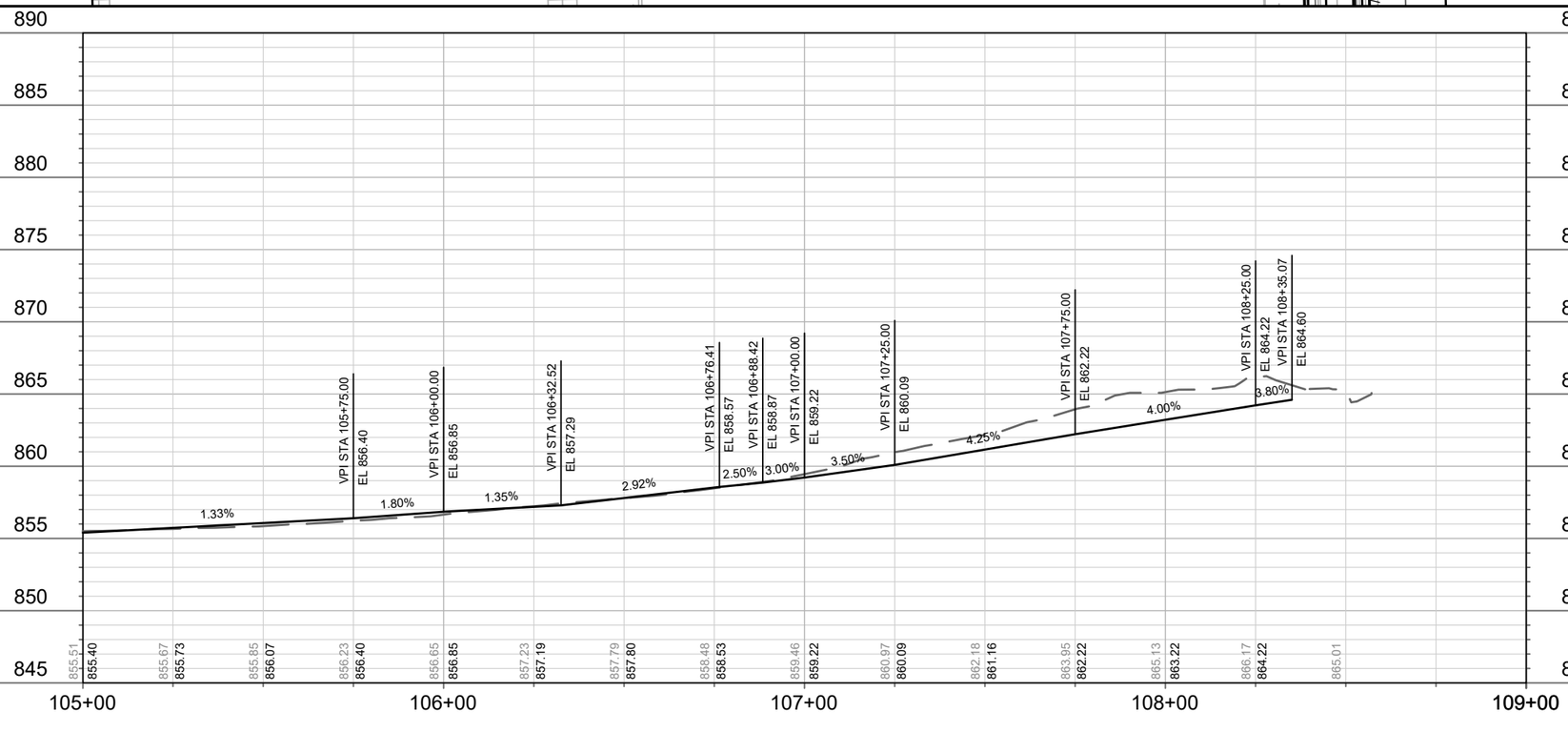

FISH HATCHERY ROAD SIDEWALK PLAN & PROFILE

SSM FISH HATCHERY RIAD CLINIC & CSM

M:\DESIGN\Projects\12948\CAD\Plan Sheets\12948EN-PnP SW Fish Hatch&Midland.dwg

MARK	REVISION	DATE	BY
---	---	---	---

Designed By: AJZ | Date: 10/13/2020 11:10 AM | Scale: 1" = 40'

12948

MADISON, WI

CONTRACT NO: 8894

12948

P-2

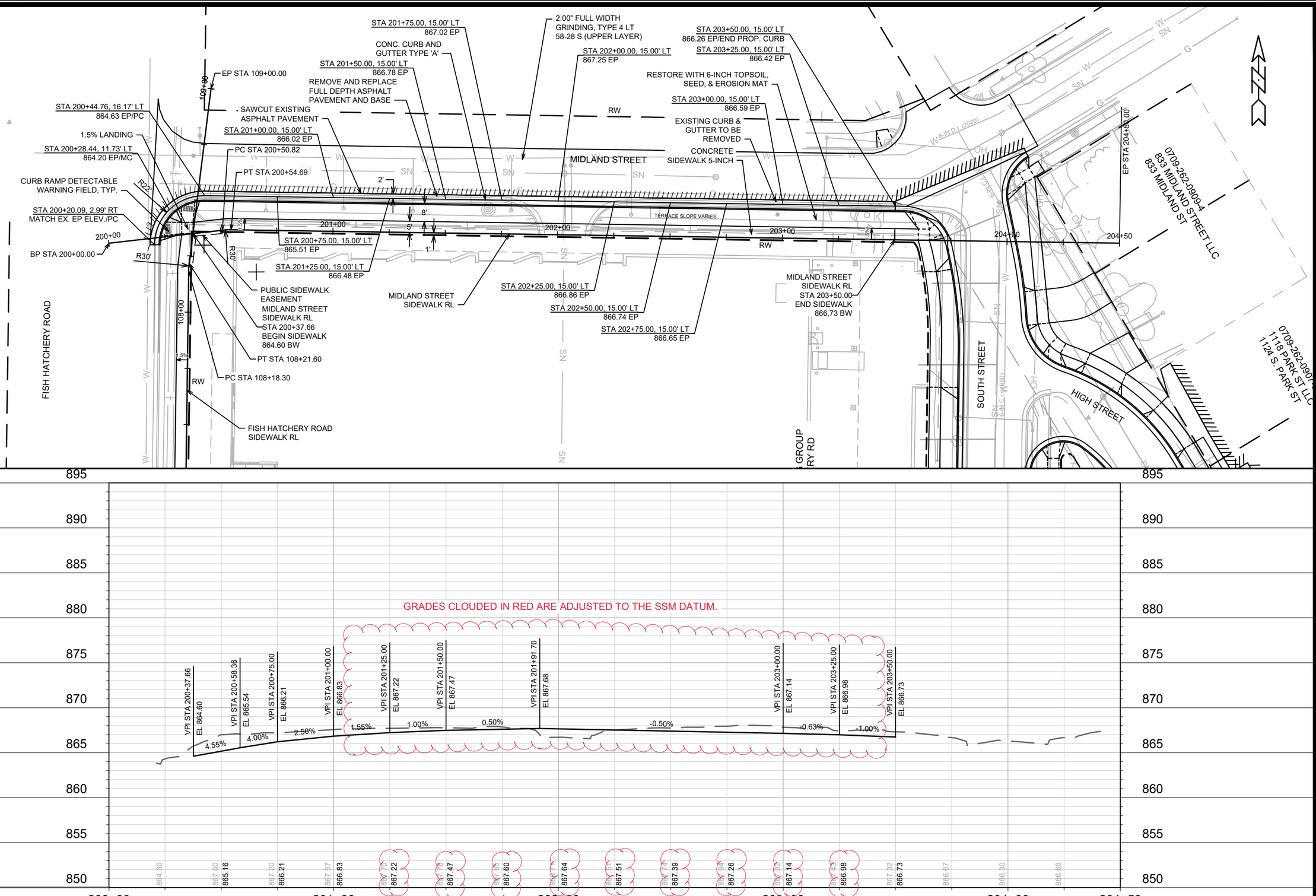

MARK	REVISION	DATE	BY
Designed By: AJZ	Date: 10/11/2021 3:46 PM	Scale: 1" = 40'	P-3

12948

MADISON, WI

CONTRACT NO: 8894

MIDLAND STREET SIDEWALK PLAN & PROFILE

SSM FISH HATCHERY RIAD CLINIC & CSM

M:\DESIGN\Projects\12948\CAD\Plan Sheets\12948EN-PnP SW Fish Hatch&Midland.dwg

12948

P-3

FISH HATCHERY ROAD

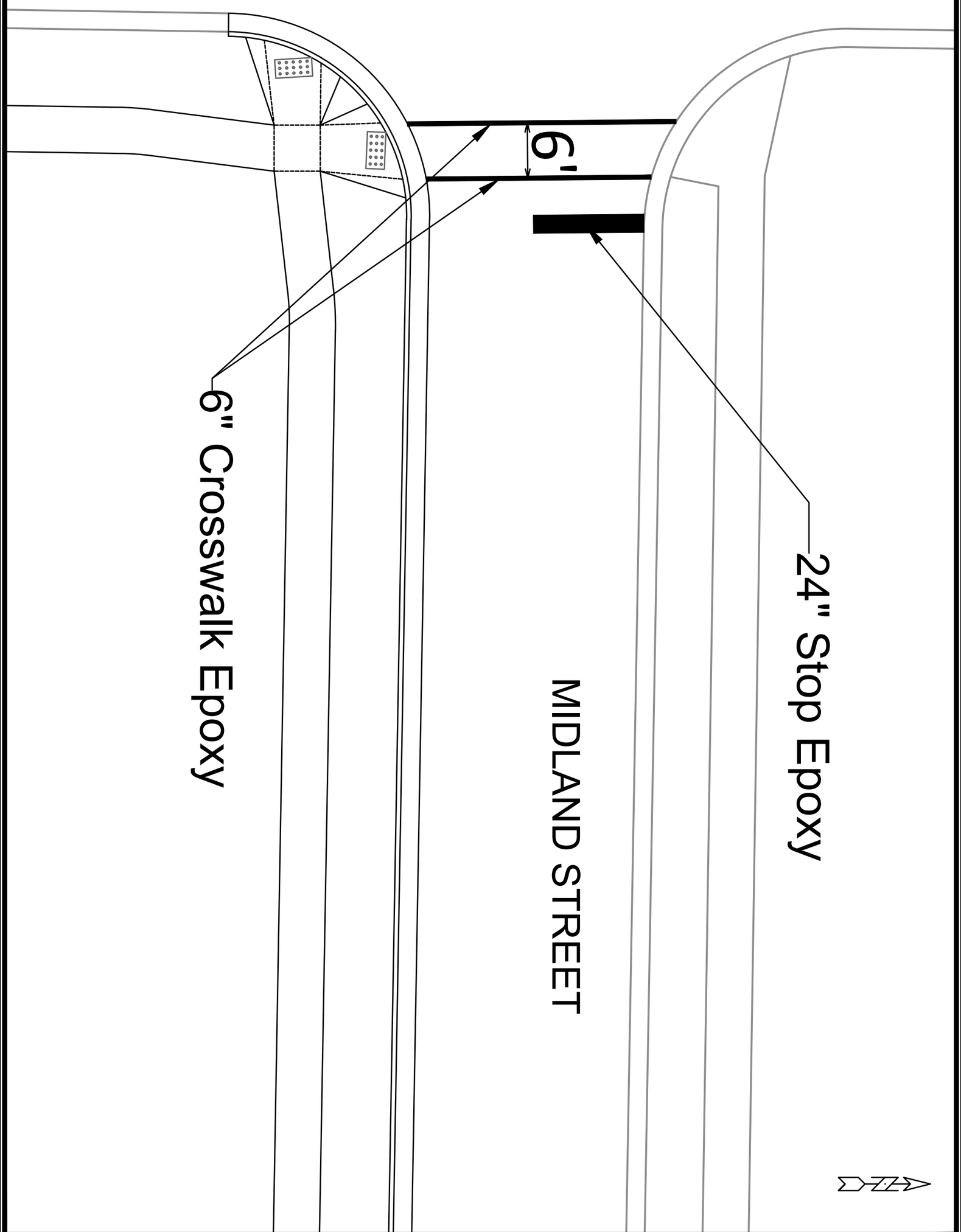

PAVEMENT MARKING PLAN		12948	
SOUTH STREET		MADISON.WI	
M:\DESIGN\Projects\12948\CAD\Traffic\12948TE-Pvmt-Mrk.dwg	CONTRACT NO:	8559	

MARK	REVISION	DATE	BY

Designed By: SDM | Date: 9/23/2020 1:54 PM | Scale: 1:40

12948 | M-1

M-1 | 12948

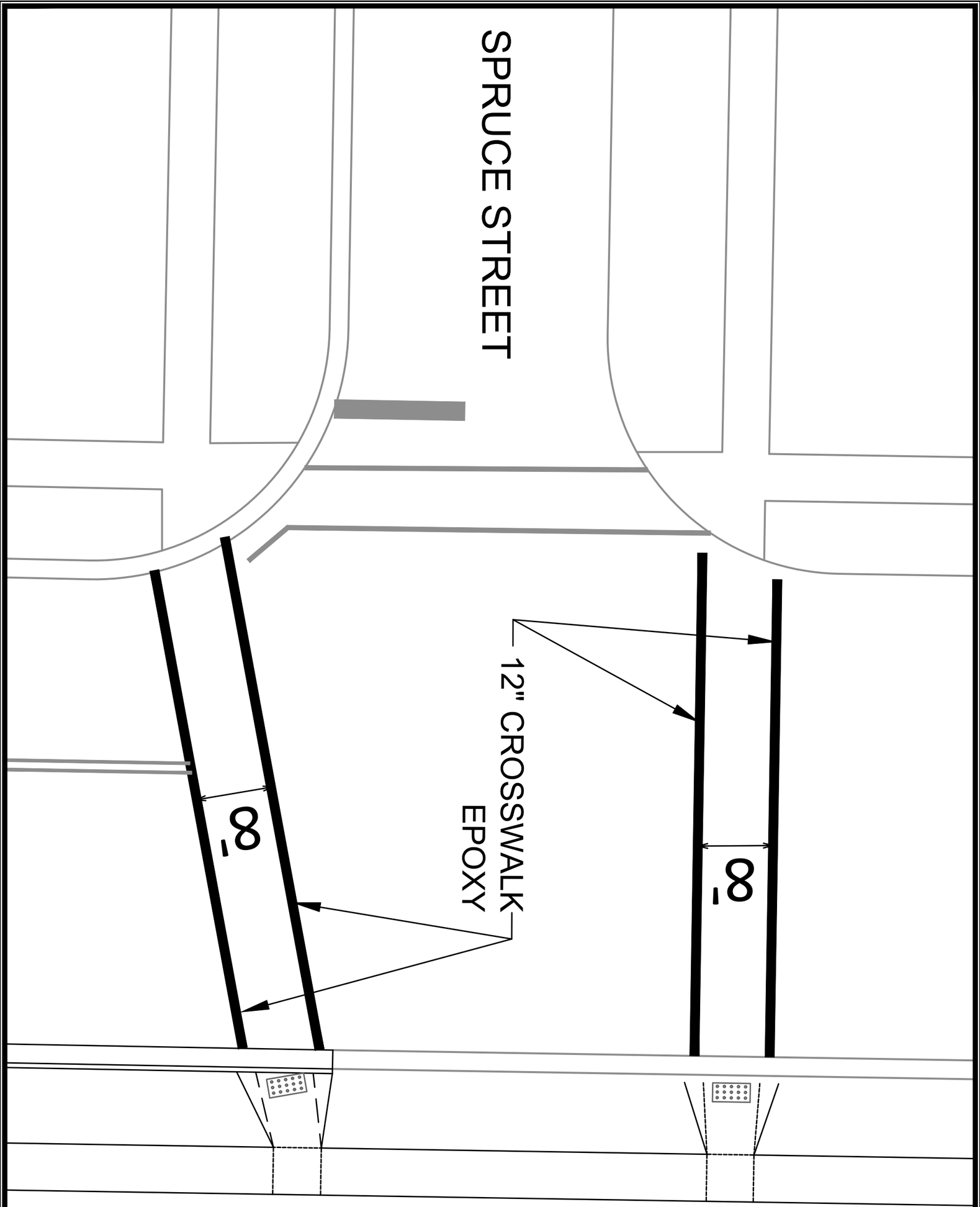

FISH HATCHERY ROAD

M-2

12948

PAVEMENT MARKING PLAN 12948

SOUTH STREET MADISON.WI

M:\DESIGN\Projects\12948\CAD\Traffic\12948TE-Pvmt-Mrk.dwg CONTRACT NO: 8559

MARK	REVISION	DATE	BY
---	---	---	---
---	---	---	---
---	---	---	---
---	---	---	---

Designed By: SDM | Date: 10/27/2020 1:07 PM | Scale: 1:10

12948 M-2

GENERAL ELECTRICAL NOTES:

1. ALL LOCATIONS ARE APPROXIMATE. TRAFFIC ENGINEER SHALL APPROVE FINAL LOCATIONS INCLUDING SETBACK IN HE FIELD. AFTER CONTRACTOR SURVEYS STAKING, THE CONTRACTOR SHALL NOTIFY GRETCHEN AVILES PINEIRO (266-4899), AT LEAST 24-HOURS IN ADVANCE OF NEEDING BASE LOCATION MARKED.
2. THE CONTRACTOR SHALL DO ALL WORK IN ACCORDANCE WITH CITY OF MADISON STANDARD SPECIFICATIONS FOR PUBLIC WORKS CONSTRUCTION 2020 EDITION AND ALL ADDENDUMS THERETO.
3. ALL CONDUIT SHALL BE PVC SCHEDULE 80 UNDER PAVEMENT OR SCHEDULE 40 OTHERWISE. PULL WIRE REQUIRED AS PER STANDARD SPECIFICATIONS.
4. THE CONTRACTOR SHALL CALL TROY VANT (395-1975) AT THE TRAFFIC ENGINEERING SHOP AT LEAST 24-HOURS IN ADVANCE OF BURYING CONDUIT TO ARRANGE FOR INSPECTION.

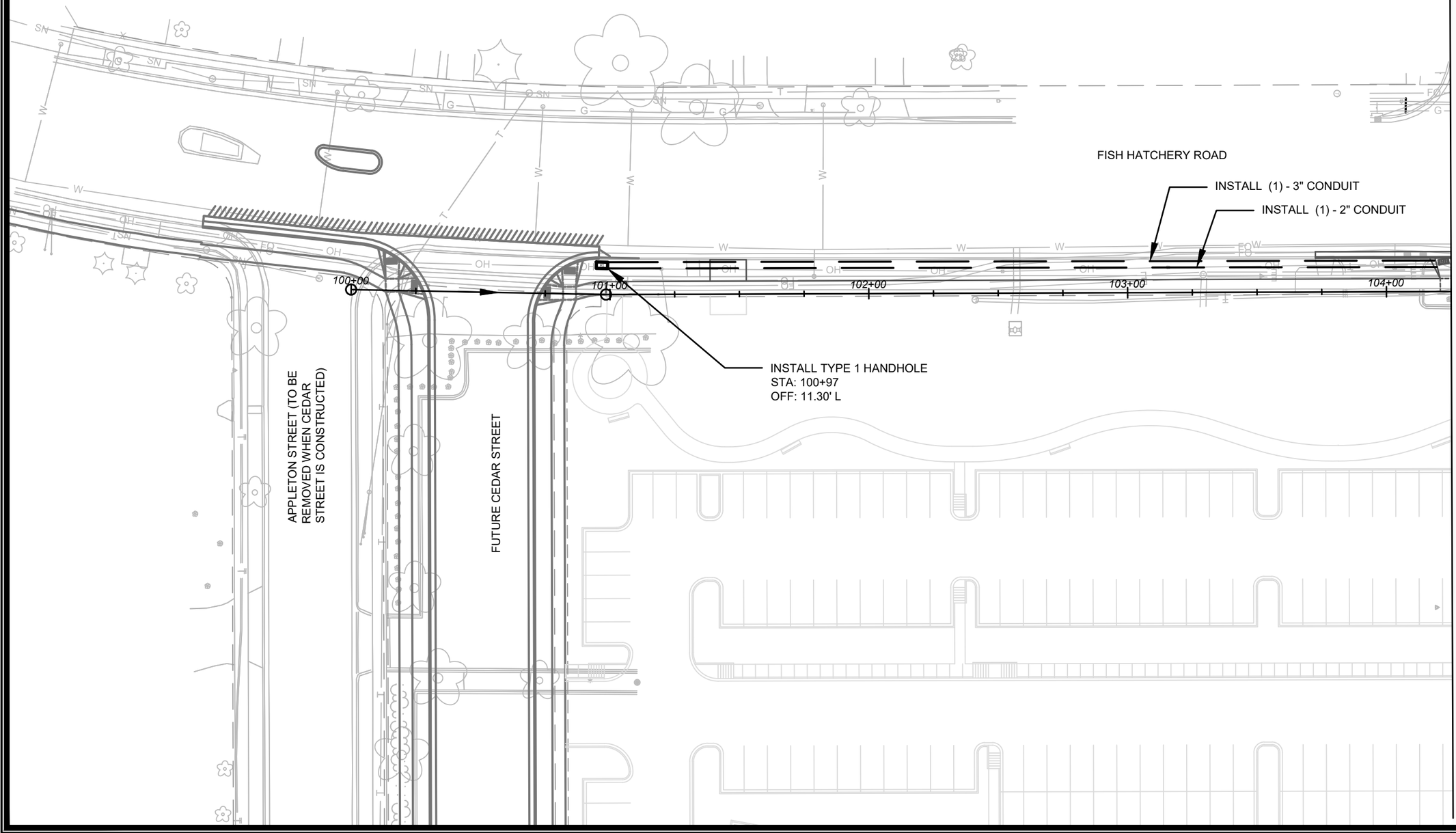

MARK	REVISION	DATE	BY
Designed By: GMA	Date: 8/24/2020 3:46 PM	Scale: 1" = 40'	---

12948

MADISON, WI

CONTRACT NO: 8894

ELECTRICAL PLANS

SSM FISH HATCHERY RIAD CLINIC & CSM

M:\DESIGN\Projects\12948\CAD\Traffic\12948TE-Electrical.dwg

12948

E-1

INSTALL TYPE 1 HANDHOLE
STA: 104+50
OFF: 10.67' L

INSTALL TYPE 1 HANDHOLE
STA: 108+25
OFF: 11.73' L

FISH HATCHERY ROAD

INSTALL (1) - 3" CONDUIT

INSTALL (1) - 2" CONDUIT

BORE CONDUITS ACROSS MIDLAND ST, EXISTING CURB & RAMP.
STUB CONDUITS AS PER THE "DUCT TERMINATION" STANDARD DETAIL DRAWING 6.03 IN THE GRASS TERRACE.

105+00

106+00

107+00

108+00

109+00

MIDLAND STREET

MATCHLINE STA 104+25

MARK	REVISION	DATE	BY
Designed By: GMA	Date: 8/25/2020 12:11 PM	Scale: 1" = 40'	

12948

MADISON, WI

CONTRACT NO: 8894

ELECTRICAL PLANS

SSM FISH HATCHERY RIAD CLINIC & CSM

M:\DESIGN\Projects\12948\CAD\Traffic\12948TE-Electrical.dwg

12948

E-2

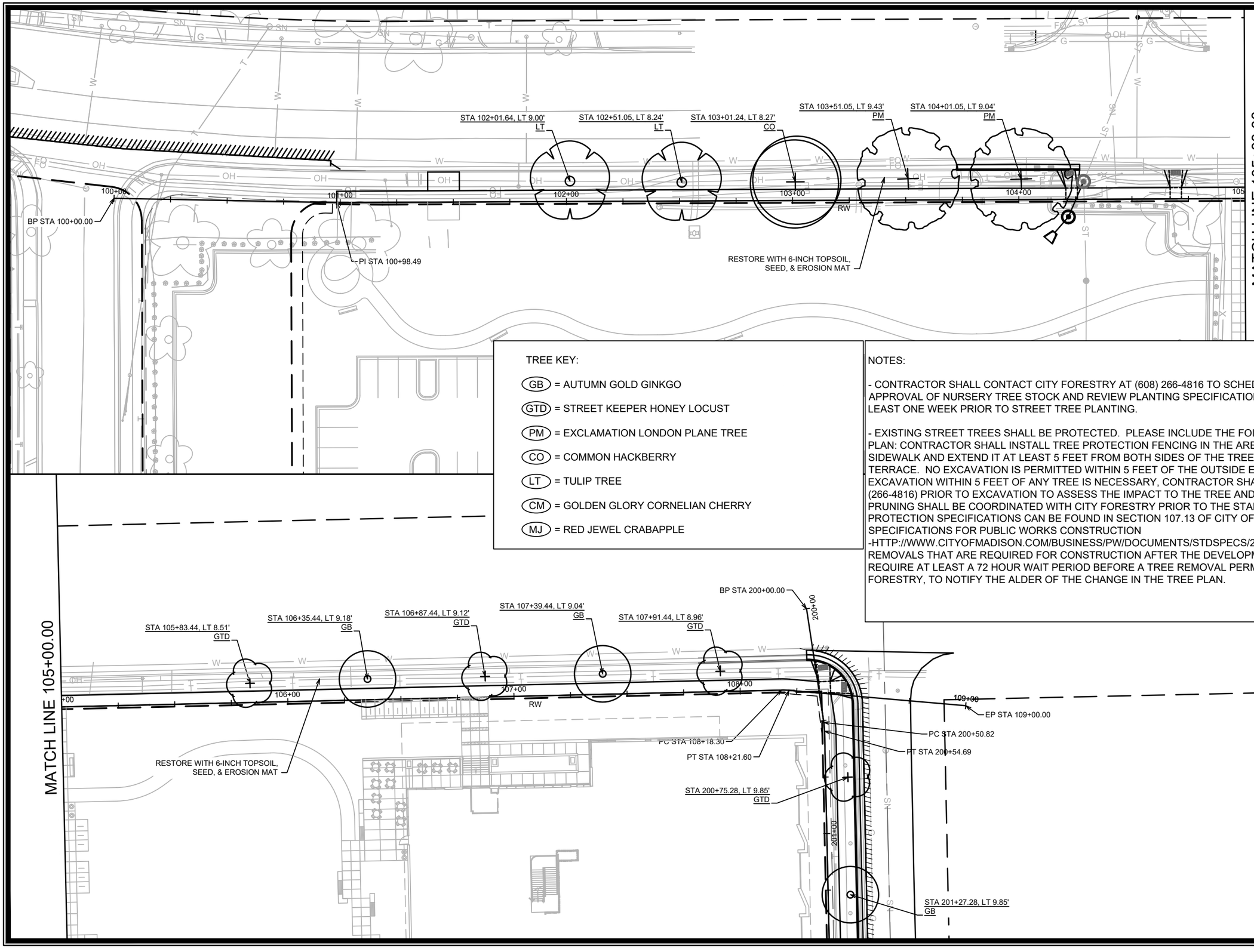

TREE KEY:

- (GB) = AUTUMN GOLD GINKGO
- (GTD) = STREET KEEPER HONEY LOCUST
- (PM) = EXCLAMATION LONDON PLANE TREE
- (CO) = COMMON HACKBERRY
- (LT) = TULIP TREE
- (CM) = GOLDEN GLORY CORNELIAN CHERRY
- (MJ) = RED JEWEL CRABAPPLE

NOTES:

- CONTRACTOR SHALL CONTACT CITY FORESTRY AT (608) 266-4816 TO SCHEDULE INSPECTION AND APPROVAL OF NURSERY TREE STOCK AND REVIEW PLANTING SPECIFICATIONS WITH THE LANDSCAPER AT LEAST ONE WEEK PRIOR TO STREET TREE PLANTING.

- EXISTING STREET TREES SHALL BE PROTECTED. PLEASE INCLUDE THE FOLLOWING NOTE ON THE SITE PLAN: CONTRACTOR SHALL INSTALL TREE PROTECTION FENCING IN THE AREA BETWEEN THE CURB AND SIDEWALK AND EXTEND IT AT LEAST 5 FEET FROM BOTH SIDES OF THE TREE ALONG THE LENGTH OF THE TERRACE. NO EXCAVATION IS PERMITTED WITHIN 5 FEET OF THE OUTSIDE EDGE OF A TREE TRUNK. IF EXCAVATION WITHIN 5 FEET OF ANY TREE IS NECESSARY, CONTRACTOR SHALL CONTACT CITY FORESTRY (266-4816) PRIOR TO EXCAVATION TO ASSESS THE IMPACT TO THE TREE AND ROOT SYSTEM. TREE PRUNING SHALL BE COORDINATED WITH CITY FORESTRY PRIOR TO THE START OF CONSTRUCTION. TREE PROTECTION SPECIFICATIONS CAN BE FOUND IN SECTION 107.13 OF CITY OF MADISON STANDARD SPECIFICATIONS FOR PUBLIC WORKS CONSTRUCTION -HTTP://WWW.CITYOFMADISON.COM/BUSINESS/PW/DOCUMENTS/STDSPECS/2018/PART1.PDF. ANY TREE REMOVALS THAT ARE REQUIRED FOR CONSTRUCTION AFTER THE DEVELOPMENT PLAN IS APPROVED WILL REQUIRE AT LEAST A 72 HOUR WAIT PERIOD BEFORE A TREE REMOVAL PERMIT CAN BE ISSUED BY FORESTRY, TO NOTIFY THE ALDER OF THE CHANGE IN THE TREE PLAN.

MARK	REVISION	DATE	BY
Designed By: AJZ	Date: 9/24/2020 1:23 PM	Scale: ##########	L-1
12948			

12948

MADISON, WI

CONTRACT NO: 8894

FISH HATCHERY ROAD LANDSCAPE PLAN

SSM FISH HATCHERY RIAD CLINIC & CSM

M:\DESIGN\Projects\12948\CAD\Plan Sheets\12948EN-LandscapePlan.dwg

CITY OF MADISON WISCONSIN

12948

L-1

EP STA 109+00.00

109+00

PC STA 200+50.82

PT STA 200+54.69

STA 202+50.32, LT 9.85'
GB

STA 203+03.15, LT 9.85'
GTD

STA 201+27.28, LT 9.85'
GB

STA 201+79.28, LT 9.85'
GTD

SN

201+00

202+00

203+00

204+00

204+50

EP STA 204+50.00

RW

200+00

BP STA 200+00.00

STA 200+75.28, LT 9.85'
GTD

PT STA 108+21.60

PC STA 108+18.30

RESTORE WITH 6-INCH TOPSOIL,
SEED, & EROSION MAT

108+00

STA 107+91.44, LT 8.96'
GTD

STA 107+39.44, LT 9.04'
GB

RW

107+00

STA 106+87.44, LT 9.12'
GTD

STA 106+35.44, LT 9.18'
GB

TREE KEY:

GB = AUTUMN GOLD GINKGO

GTD = STREET KEEPER HONEY LOCUST

PM = EXCLAMATION LONDON PLANE TREE

CO = COMMON HACKBERRY

LT = TULIP TREE

CM = GOLDEN GLORY CORNELIAN CHERRY

MJ = RED JEWEL CRABAPPLE

NOTES:

- CONTRACTOR SHALL CONTACT CITY FORESTRY AT (608) 266-4816 TO SCHEDULE INSPECTION AND APPROVAL OF NURSERY TREE STOCK AND REVIEW PLANTING SPECIFICATIONS WITH THE LANDSCAPER AT LEAST ONE WEEK PRIOR TO STREET TREE PLANTING.

- EXISTING STREET TREES SHALL BE PROTECTED. PLEASE INCLUDE THE FOLLOWING NOTE ON THE SITE PLAN: CONTRACTOR SHALL INSTALL TREE PROTECTION FENCING IN THE AREA BETWEEN THE CURB AND SIDEWALK AND EXTEND IT AT LEAST 5 FEET FROM BOTH SIDES OF THE TREE ALONG THE LENGTH OF THE TERRACE. NO EXCAVATION IS PERMITTED WITHIN 5 FEET OF THE OUTSIDE EDGE OF A TREE TRUNK. IF EXCAVATION WITHIN 5 FEET OF ANY TREE IS NECESSARY, CONTRACTOR SHALL CONTACT CITY FORESTRY (266-4816) PRIOR TO EXCAVATION TO ASSESS THE IMPACT TO THE TREE AND ROOT SYSTEM. TREE PRUNING SHALL BE COORDINATED WITH CITY FORESTRY PRIOR TO THE START OF CONSTRUCTION. TREE PROTECTION SPECIFICATIONS CAN BE FOUND IN SECTION 107.13 OF CITY OF MADISON STANDARD SPECIFICATIONS FOR PUBLIC WORKS CONSTRUCTION -HTTP://WWW.CITYOFMADISON.COM/BUSINESS/PW/DOCUMENTS/STDSPECS/2018/PART1.PDF. ANY TREE REMOVALS THAT ARE REQUIRED FOR CONSTRUCTION AFTER THE DEVELOPMENT PLAN IS APPROVED WILL REQUIRE AT LEAST A 72 HOUR WAIT PERIOD BEFORE A TREE REMOVAL PERMIT CAN BE ISSUED BY FORESTRY, TO NOTIFY THE ALDER OF THE CHANGE IN THE TREE PLAN.

MARK	REVISION	DATE	BY
---	---	---	---

Designed By: AJZ
Date: 9/23/2020 1:55 PM
Scale: ##########

12948

MIDLAND STREET LANDSCAPE PLAN
SSM FISH HATCHERY RIAD CLINIC & CSM

M:\DESIGN\Projects\12948\CAD\Plan Sheets\12948EN-LandscapePlan.dwg

CONTRACT NO: 8894

CITY OF MADISON WISCONSIN

12948

L-2

L-2