CITY OF MADISON

CITY ENGINEERING DIVISION
DEPARTMENT OF PUBLIC WORKS
PLAN OF PROPOSED IMPROVEMENT

Madison, Wisconsin

339 W. GORHAM STREET

CITY PROJECT NO. 14001
CONTRACT NO. 9140

INDEX OF SHEETS

SHEET NO. D1	GENERAL NOTES
SHEET NO. D2-D4	TYPICAL SECTIONS
SHEET NO. P1-P5	STREET PLAN & PROFILE
SHEET NO. U1	STORM SEWER PLAN
SHEET NO. C600 - C603	SANITARY SEWER PLAN & PROFILE
SHEET NO. L1	LANDSCAPE PLAN
SHEET NO. X1-X10	CROSS SECTIONS
SHEET NO. MN1	MAINTENANCE PLAN

REVISION 1 - 02/02/2023
- SEE SHEETS P5 & U1

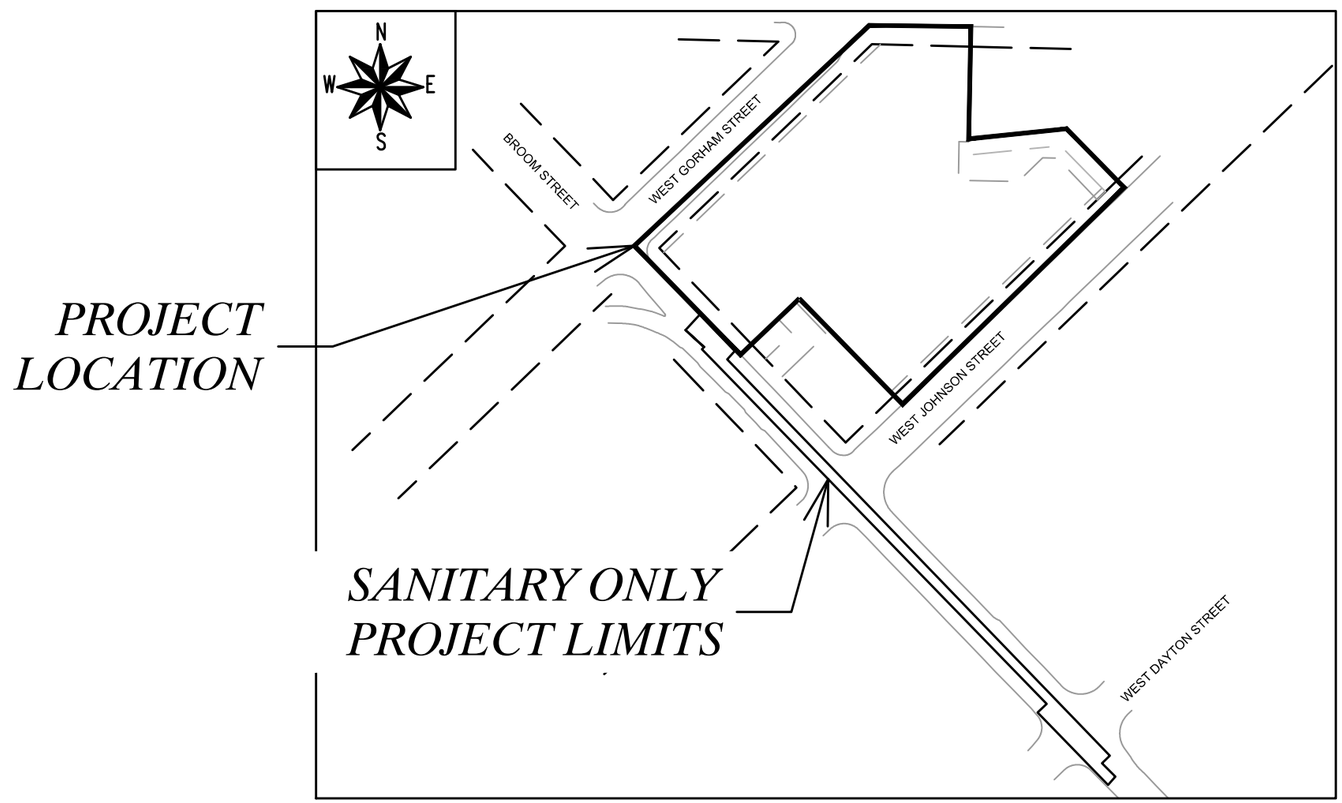

PUBLIC IMPROVEMENT PROJECT APPROVED

FEBRUARY 1, 2022

BY THE COMMON COUNCIL OF MADISON, WISCONSIN

PUBLIC IMPROVEMENT DESIGN APPROVED BY:

N- Greg Fries — Oct 25, 2022

City Engineer — Date

STREET GRADES DESIGNED BY:

WISCONSIN
FADI B EL MUSA GONZALEZ
E-47872
MADISON WI
PROFESSIONAL ENGINEER

Oct 31, 2022

STORM SEWER DESIGNED BY:

WISCONSIN
JANET SCHMIDT
E-34681
MADISON WI
PROFESSIONAL ENGINEER

Oct 25, 2022

WATER DESIGNED BY:

LATERAL ONLY

SANITARY SEWER DESIGNED BY:

SEE INDIVIDUAL SHEETS FOR STAMP

PLOT SCALE: 1:0" = 1:0"_XREF
PLOT NAME: ----
REV. DATE: 9/29/2022 7:34 AM
ORIGINATOR: CITY_OF_MADISON

FILE NAME: M:\DESIGN\Projects\14001\CAD\Streets\14001EN-TitleSheet.dwg
DATE: 9/30/2022 10:04 AM

ALL PROPOSED STREET TREE REMOVALS WITHIN THE RIGHT OF WAY SHALL BE REVIEWED BY CITY FORESTRY BEFORE THE PLAN COMMISSION MEETING. STREET TREE REMOVALS REQUIRE APPROVAL AND A TREE REMOVAL PERMIT ISSUED BY CITY FORESTRY. ANY STREET TREE REMOVALS REQUESTED AFTER THE DEVELOPMENT PLAN IS APPROVED BY THE PLAN COMMISSION OR THE BOARD OF PUBLIC WORKS AND CITY FORESTRY WILL REQUIRE A MINIMUM OF A 72-HOUR REVIEW PERIOD WHICH SHALL INCLUDE THE NOTIFICATION OF THE ALDERPERSON WITHIN WHO'S DISTRICT IS AFFECTED BY THE STREET TREE REMOVAL(S) PRIOR TO A TREE REMOVAL PERMIT BEING ISSUED.

AS DEFINED BY THE SECTION 107.13 OF CITY OF MADISON STANDARD SPECIFICATIONS FOR PUBLIC WORKS CONSTRUCTION: NO EXCAVATION IS PERMITTED WITHIN 5 FEET OF THE TRUNK OF THE STREET TREE OR WHEN CUTTING ROOTS OVER 3 INCHES IN DIAMETER. IF EXCAVATION IS NECESSARY, THE CONTRACTOR SHALL CONTACT MADISON CITY FORESTRY (266-4816) PRIOR TO EXCAVATION. CITY OF MADISON FORESTRY PERSONNEL SHALL ASSESS THE IMPACT TO THE TREE AND TO ITS ROOT SYSTEM PRIOR TO WORK COMMENCING. TREE PROTECTION SPECIFICATIONS CAN BE FOUND ON THE FOLLOWING WEBSITE: HTTPS://WWW.CITYOFMADISON.COM/BUSINESS/PW/SPECS.CFM

DEVELOPER MUST SUBMIT A TRAFFIC CONTROL PLAN TO CITY TRAFFIC ENGINEERING AT LEAST 14 DAYS PRIOR TO THE START OF WORK. WORK SHALL NOT PROCEED UNTIL AN APPROVED TRAFFIC CONTROL PLAN IS IN PLACE.

CONTACT PROJECT ENGINEER AND STREET DESIGNER IKE OKAFOR AT IOKAFOR@CITYOFMADISON.COM FOR CAD AND ALIGNMENT DATA PRIOR TO STAKING.

CONVENTIONAL SIGNS
FIELD VERIFY ALL UTILITY LOCATIONS

GAS	G
STORM SEWER	ST
SANITARY SEWER	SN
WATER	W
BURIED ELECTRIC	E
OVERHEAD ELECTRIC	OH
POWER POLE	
ADA COMPLIANT RAMP W/ DETECTABLE WARNING FIELD	
COMBUSTIBLE FLUIDS	CAUTION

UNDERDRAINS SHALL BE INSTALLED PER STANDARD DETAIL DRAWING 4.05 FOR 75' ON EACH SIDE OF THE LOW POINT, OR TO THE NEAREST CURB HIGH POINT. ALL UNDERDRAIN SHALL BE WRAPPED.

ALL GUTTERS SHALL DRAIN WITH A MINIMUM GRADE OF 0.5% TOWARD STORM SEWER INLETS.

ALL DITCHES SHALL DRAIN WITH A MINIMUM GRADE OF 0.5%

THE CROSS SLOPE OF SIDEWALKS AND BARRIER FREE SIDEWALK CURB RAMPS SHALL TYPICALLY BE 1.5%. THE LONGITUDINAL GRADE OF BARRIER FREE SIDEWALK CURB RAMPS SHALL NOT EXCEED 8.33%. ALL SIDEWALK RAMPS SHALL BE CONSTRUCTED ACCORDING TO S.D.D. 3.04. AT ALL OTHER LOCATIONS THE LONGITUDINAL GRADE OF SIDEWALKS SHALL NOT BE LESS THAN 0.5% AND SHALL DRAIN TOWARD STORM SEWER INLETS. ALL SIDEWALK AND SIDEWALK RAMP ELEVATIONS AND GRADES SHALL BE FIELD VERIFIED AND SET TO COMPLY WITH THE CITY OF MADISON STANDARD SPECIFICATIONS AND THE A.D.A. GUIDELINES.

*CURB STATION AND OFFSETS SHALL BE TO THE **EDGE OF PAVEMENT** UNLESS OTHERWISE INDICATED. CURB ELEVATIONS SHALL BE TO THE **EDGE OF PAVEMENT** UNLESS OTHERWISE INDICATED.*

POWER POLES AND OTHER OBSTRUCTIONS SHALL BE MOVED TO PROVIDE 2 FEET MINIMUM OF CLEAR DISTANCE FROM ANY FACE OF CURB OR EDGE OF SIDEWALK.

ANY INFORMATION SHOWN ON THIS PLAN, WHICH IS NOT PART OF THIS RIGHT-OF-WAY PROJECT, IS PRELIMINARY AND NOT FOR CONSTRUCTION.

THERE MAY BE EXISTING UTILITIES OR OTHER FEATURES WHICH ARE EITHER NOT SHOWN OR SHOWN INCORRECTLY ON THIS PLAN. IT IS THE RESPONSIBILITY OF THE DEVELOPER TO LOCATE AND IDENTIFY ALL UTILITIES AND TOPOGRAPHY WHICH MAY AFFECT THE CONSTRUCTION OF THESE IMPROVEMENTS.

ALL PERMANENT SIGNING AND POSTING WILL BE DETERMINED AND PROVIDED BY THE TRAFFIC ENGINEERING DIVISION, FOLLOWING CONSTRUCTION OF THESE IMPROVEMENTS.

THE DEVELOPER SHALL PROVIDE, INSTALL AND MAINTAIN ALL STREET END BARRICADES, SIGNING AND TRAFFIC CONTROL, AS REQUIRED BY THE CITY TRAFFIC ENGINEER.

PAVEMENT SAWCUTS SHALL BE AS DIRECTED BY THE CITY CONSTRUCTION ENGINEER. SAWCUTS SHOWN ON THE PLAN ARE APPROXIMATE.

ALL WORK IN THE RIGHT OF WAY AND PUBLIC EASEMENTS SHALL BE IN ACCORDANCE WITH THE CITY OF MADISON STANDARD SPECIFICATIONS FOR PUBLIC WORKS CONSTRUCTION

ALL UTILITY VERIFICATIONS AND ACCURACY OF THE DRAWINGS ARE THE RESPONSIBILITY OF THE DEVELOPER. ANY CONFLICTS THAT ARISE FROM MISSING OR ERRONEOUS INFORMATION WILL BE AT THE EXPENSE OF THE DEVELOPER. NO PRECAST WILL BE APPROVED FOR STORM SEWER OR SANITARY SEWER UNTIL ALL POTENTIAL UTILITY CONFLICTS ARE RESOLVED.

MARK	REVISION	DATE	BY
---	---	---	---
---	---	---	---
---	---	---	---
---	---	---	---

Designed By: LMC | Date: 9/14/2022 12:26 PM | Scale: 1:5

14001

MADISON, WI

CONTRACT NO: 9140

GENERAL NOTES

339 W GORHAM STREET

M:\DESIGN\Projects\14001\CAD\Streets\14001EN-Details.dwg

14001

D-1

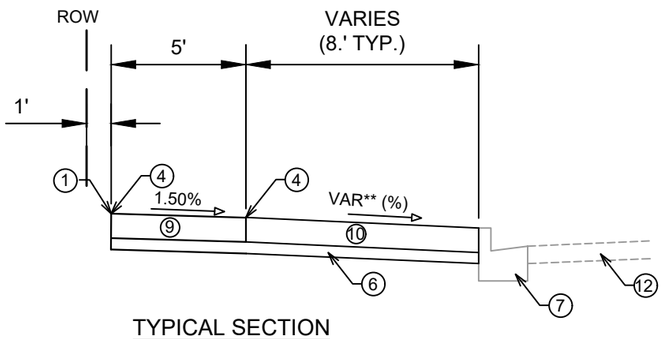

TYPICAL SECTION
N BROOM STREET
STA 20+42 TO STA 21+69
(NOT TO SCALE)

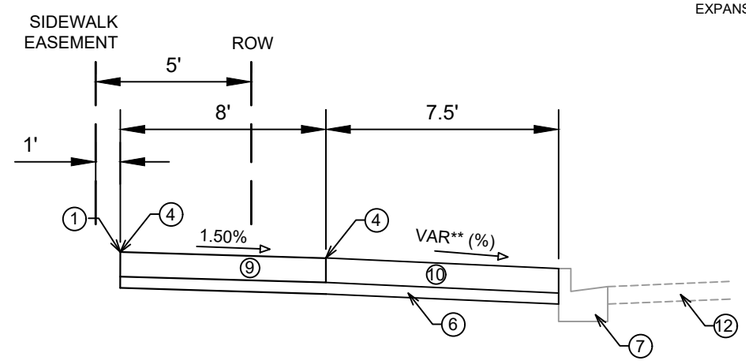

TYPICAL SECTION
W JOHNSON STREET
STA 30+90 TO STA 32+90
(NOT TO SCALE)

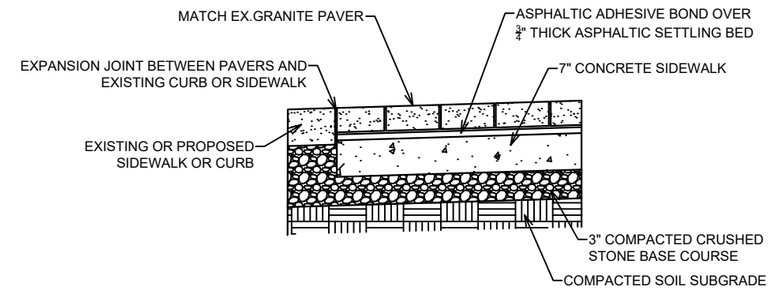

PAVER DETAIL
STATE STREET
(NOT TO SCALE)

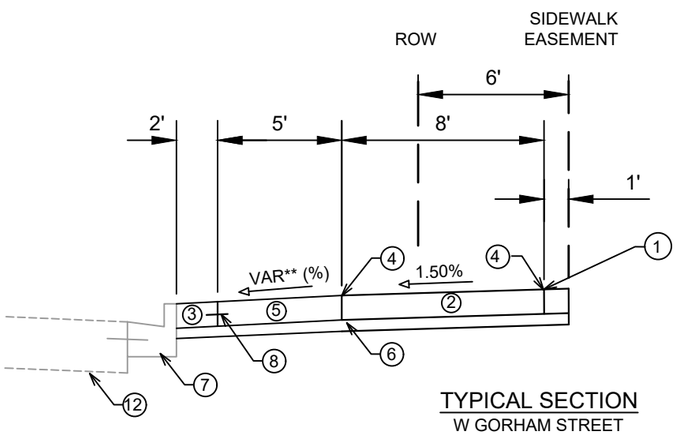

TYPICAL SECTION
W GORHAM STREET
STA 30+90 TO STA 32+90
(NOT TO SCALE)

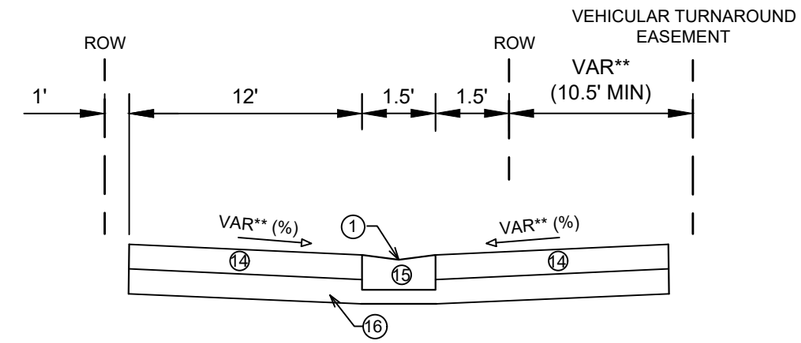

TYPICAL SECTION
W JOHNSON PUBLIC ALLEY
(NOT TO SCALE)

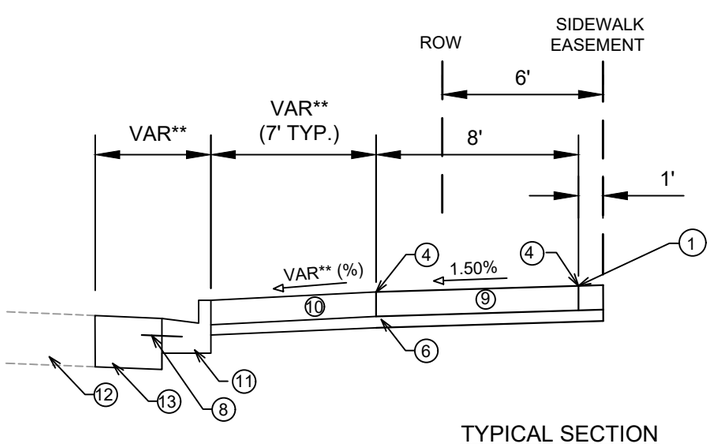

TYPICAL SECTION
W GORHAM STREET
STA 30+45 TO STA 30+90
(NOT TO SCALE)

1. POINT REFERRED TO ON PROFILE.
2. 7" CONCRETE SIDEWALK*
3. 7" CONCRETE BAND.
4. PLACE JOINT FILLER & JOINT SEALER.
5. 7" CONCRETE TERRACE*
6. 3" SELECT FILL SIDEWALK BASE.
7. EX. TYPE 'A' CONCRETE CURB & GUTTER TO REMAIN
8. TIE BAR
9. 5" CONCRETE SIDEWALK.
10. 5" CONCRETE TERRACE.
11. NEW TYPE 'A' CONCRETE CURB AND GUTTER .
12. EX. PAVEMENT TO REMAIN.
13. REMOVE & REPLACE 10" CONCRETE PAVEMENT*(SAWCUT AT JOINT)
14. 3 1/4" MIN. BITUMINOUS PAVEMENT
15. 18" V NOTCH ALLEY GUTTER
16. GRADATION 2 CRUSHED STONE BASE 4.25" MIN DEPTH UNDER THE ALLEY GUTTER AND 8" MIN UNDER ASPHALT.

SPECIAL NOTES

* CONCRETE SHALL BE C1 EXPOSED AGGREGATE CONCRETE WHERE SPECIFIED IN THE P SHEETS.

** SEE P & X SHEETS FOR SLOPES AND DIMENSIONS.

MARK	REVISION	DATE	BY
---	---	---	---
---	---	---	---
---	---	---	---
---	---	---	---
---	---	---	---

Designed By: LMC | Date: 9/28/2022 4:02 PM | Scale: Custom | D-2

14001

MADISON, WI

CONTRACT NO: 9140

TYPICAL SECTIONS

339 W GORHAM STREET

M:\DESIGN\Projects\14001\CAD\Streets\14001EN-Details.dwg

14001

D-2

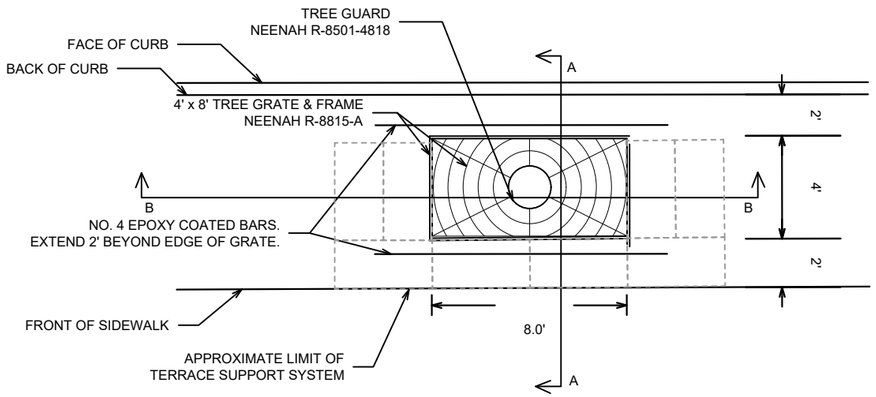

PLAN VIEW
N BROOM STREET
TREE GRATE INSTALLATION DETAIL
(NOT TO SCALE)

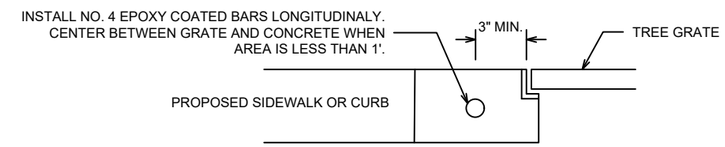

SECTION A-A
CONCRETE REINFORCING DETAIL
FOR TREE GRATE
(NOT TO SCALE)

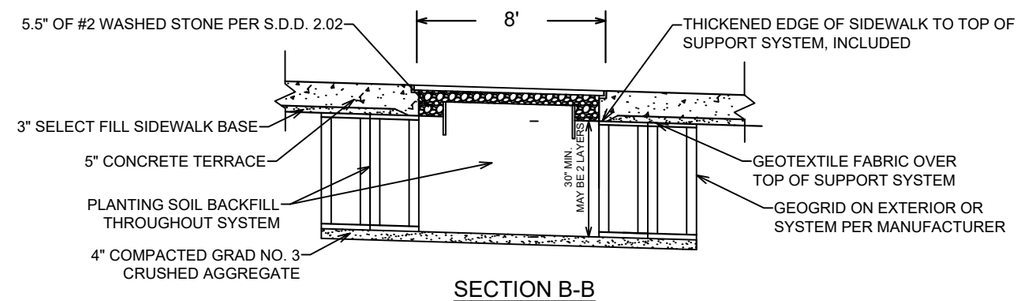

SECTION B-B
N BROOM STREET
TERRACE SUPPORT SYSTEM DETAIL
(NOT TO SCALE)

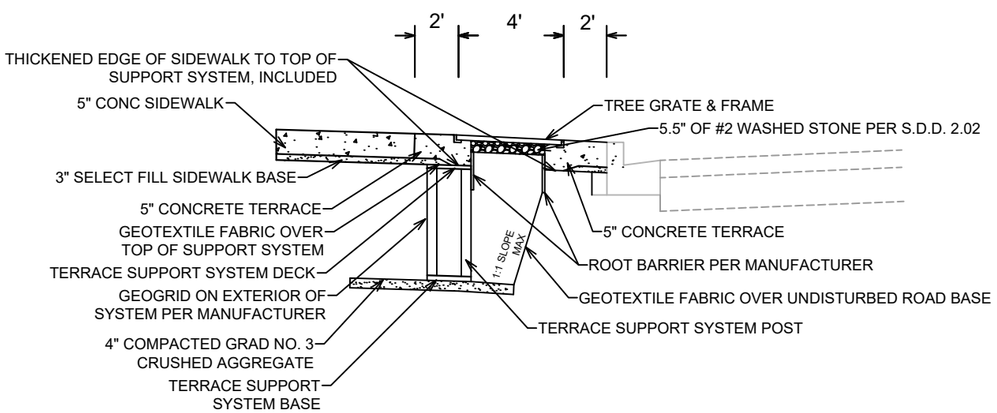

SECTION A-A
N BROOM STREET
TERRACE SUPPORT SYSTEM DETAIL
(NOT TO SCALE)

NOTES:

1. LOCATIONS OF TREES AND APPROXIMATE LIMITS OF TERRACES SUPPORT SYSTEM ARE SHOWN ON THE LANDSCAPING PLAN. THE FINAL LAYOUT OF THE SYSTEM IS DEPENDENT ON THE MANUFACTURER SELECTED BY THE DEVELOPER SHALL CONFIRM THE LAYOUT WITH THE ENGINEER & CITY FORESTRY PRIOR TO INSTALLATION.

2. TERRACE SUPPORT SYSTEM SHALL BE INSTALLED PER MANUFACTURER'S RECOMMENDATIONS INCLUDING ALL FABRICS, GEOGRID, AND ROOT BARRIERS, MINIMUM DEPTH OF THE SYSTEM IS PROVIDED ON THE DETAIL, AND THIS MAY BE ACHIEVED IN A SINGLE LAYER OR TWO LAYERS. IN LOCATIONS OF SHALLOWER UTILITY CROSSING, THE DEPTH OF THE SYSTEM SHALL BE MODIFIED AS INDICATED ON THE LANDSCAPE PLAN.

3. THE PERIMETER OF THE SYSTEM AT EACH PLANTING LOCATION SHALL BE ENCLOSED WITH A GEOGRID AND THE TOP SURFACE IS TO BE COVERED WITH A FABRIC THAT IS TO BE HELD IN PLACE WITHA THICKENED CONCRETE EDGE AS SHOWN ON THE DETAIL.

4. BACKFILL THE ENTIRE SYSTEM WITH PLANTING SOIL TO WITHIN 5" OF THE BOTTOM OF THE TREE GRATE. ADD SOIL AS NECESSARY DURING THE TREE PLANTING PROCESS. THE REMAINING AREA IS TO BE TOPPED WITH WASHED STONE AS INDICATED IN THE STANDARD DETAIL DRAWING.

5. CONTRACTOR MUST TAKE CAUTION DURING TERRACE EXCAVATION TO AVOID EXISTING ROAD BASE.

6. THE DEVELOPER'S CONTRACTOR SHALL PROVIDE AND INSTALL THE DEEPROOT SILVA CELLS, GREENBLUE URBAN ROOTSPACE, OR APPROVED EQUAL, INSTALLATION SHALL BE ACCORDANCE TO THE MANUFACTURER'S REQUIREMENTS. THE OBJECTIVE OF INSTALLING THESE CELLS IS TO SUPPORT THE CONCRETE TERRACE, SIDEWALK AND TREE GRATES WHILE KEEPING BACKFILL MATERIAL WITHIN THE CELLS UNCOMPACTED TO PROVIDE A BETTER GROWING ENVIRONMENT FOR THE TREES.

7. THE DEVELOPER SHALL SEND THE FINAL TERRACE SUPPORT LAYOUT & SPECIFICATIONS TO THE CITY PROJECT ENGINEER AT LEAST 14 DAYS BEFORE CONSTRUCTION.

MARK	REVISION	DATE	BY
---	---	---	---
---	---	---	---
---	---	---	---
---	---	---	---
---	---	---	---

Designed By: LMC | Date: 9/28/2022 4:04 PM | Scale: Custom | D-3

14001

MADISON, WI

CONTRACT NO: 9140

TYPICAL SECTIONS - N BROOM TERRACE

339 W GORHAM STREET

M:\DESIGN\Projects\14001\CAD\Streets\14001EN-Details.dwg

14001

D-3

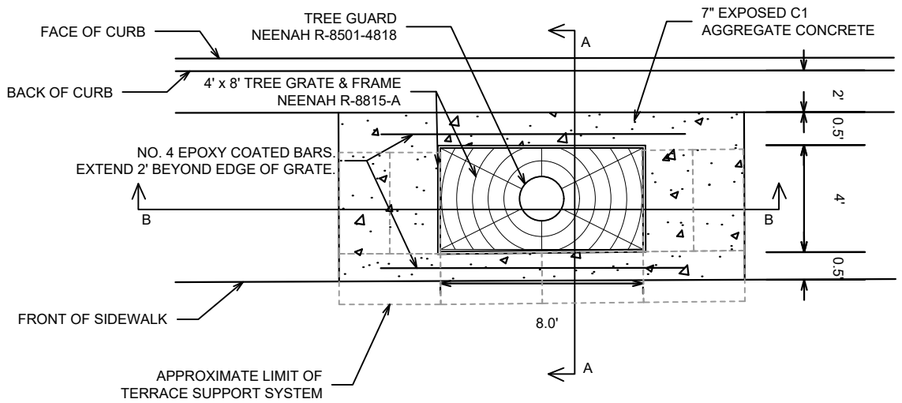

PLAN VIEW

W GORHAM STREET
TREE GRATE INSTALLATION DETAIL
(NOT TO SCALE)

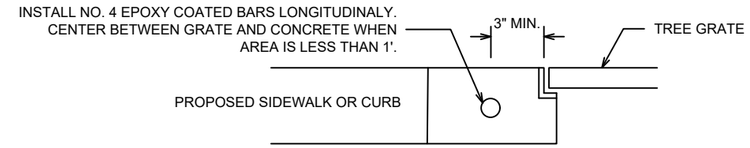

SECTION A-A

CONCRETE REINFORCING DETAIL
FOR TREE GRATE
(NOT TO SCALE)

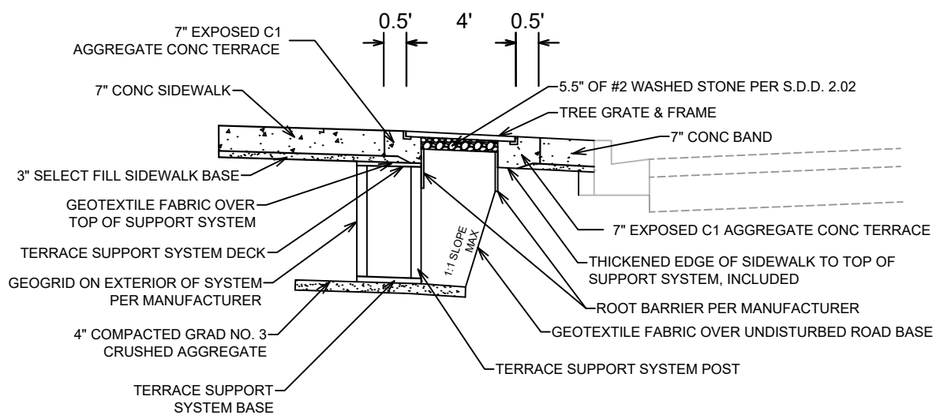

SECTION A-A

W GORHAM STREET
TERRACE SUPPORT SYSTEM DETAIL
(NOT TO SCALE)

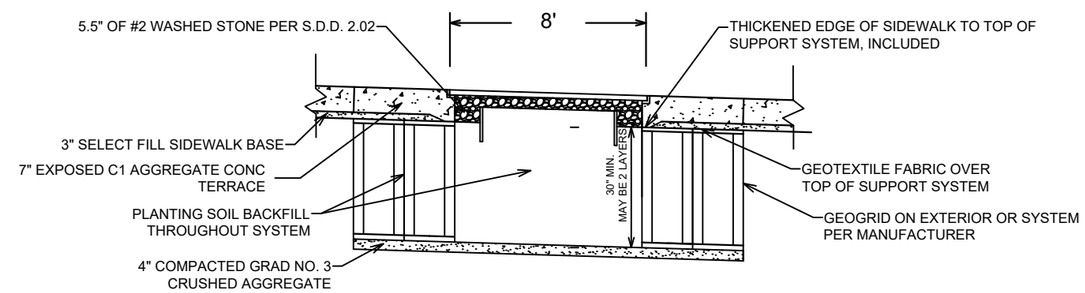

SECTION B-B

W GORHAM STREET
TERRACE SUPPORT SYSTEM DETAIL
(NOT TO SCALE)

NOTES:

1. LOCATIONS OF TREES AND APPROXIMATE LIMITS OF TERRACES SUPPORT SYSTEM ARE SHOWN ON THE LANDSCAPING PLAN. THE FINAL LAYOUT OF THE SYSTEM IS DEPENDENT ON THE MANUFACTURER SELECTED BY THE DEVELOPER SHALL CONFIRM THE LAYOUT WITH THE ENGINEER & CITY FORESTRY PRIOR TO INSTALLATION.

2. TERRACE SUPPORT SYSTEM SHALL BE INSTALLED PER MANUFACTURER'S RECOMMENDATIONS INCLUDING ALL FABRICS, GEOGRID, AND ROOT BARRIERS, MINIMUM DEPTH OF THE SYSTEM IS PROVIDED ON THE DETAIL, AND THIS MAY BE ACHIEVED IN A SINGLE LAYER OR TWO LAYERS. IN LOCATIONS OF SHALLOWER UTILITY CROSSING, THE DEPTH OF THE SYSTEM SHALL BE MODIFIED AS INDICATED ON THE LANDSCAPE PLAN.

3. THE PERIMETER OF THE SYSTEM AT EACH PLANTING LOCATION SHALL BE ENCLOSED WITH A GEOGRID AND THE TOP SURFACE IS TO BE COVERED WITH A FABRIC THAT IS TO BE HELD IN PLACE WITHA THICKENED CONCRETE EDGE AS SHOWN ON THE DETAIL.

4. BACKFILL THE ENTIRE SYSTEM WITH PLANTING SOIL TO WITHIN 5" OF THE BOTTOM OF THE TREE GRATE. ADD SOIL AS NECESSARY DURING THE TREE PLANTING PROCESS. THE REMAINING AREA IS TO BE TOPPED WITH WASHED STONE AS INDICATED IN THE STANDARD DETAIL DRAWING.

5. CONTRACTOR MUST TAKE CAUTION DURING TERRACE EXCAVATION TO AVOID EXISTING ROAD BASE.

6. THE DEVELOPER'S CONTRACTOR SHALL PROVIDE AND INSTALL THE DEEPROOT SILVA CELLS, GREENBLUE URBAN ROOTSPACE, OR APPROVED EQUAL, INSTALLATION SHALL BE ACCORDANCE TO THE MANUFACTURER'S REQUIREMENTS. THE OBJECTIVE OF INSTALLING THESE CELLS IS TO SUPPORT THE CONCRETE TERRACE, SIDEWALK AND TREE GRATES WHILE KEEPING BACKFILL MATERIAL WITHIN THE CELLS UNCOMPACTED TO PROVIDE A BETTER GROWING ENVIRONMENT FOR THE TREES.

7. THE DEVELOPER SHALL SEND THE FINAL TERRACE SUPPORT LAYOUT & SPECIFICATIONS TO THE CITY PROJECT ENGINEER AT LEAST 14 DAYS BEFORE CONSTRUCTION.

MARK	REVISION	DATE	BY
---	---	---	---
---	---	---	---
---	---	---	---
---	---	---	---

Designed By: LMC | Date: 9/28/2022 4:28 PM | Scale: Custom | D-4

14001

MADISON, WI

CONTRACT NO: 9140

TYPICAL SECTIONS - W GORHAM TERRACE

339 W GORHAM STREET

M:\DESIGN\Projects\14001\CAD\Streets\14001EN-Details.dwg

14001

D-4

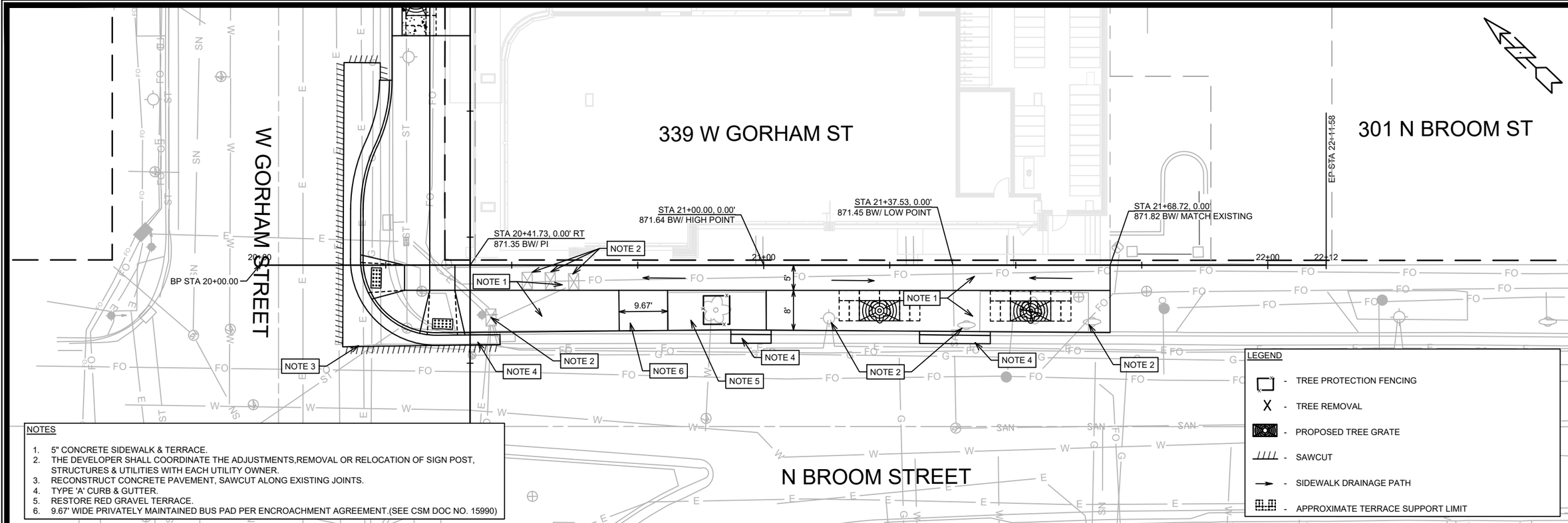

NOTES

1. 5" CONCRETE SIDEWALK & TERRACE.
2. THE DEVELOPER SHALL COORDINATE THE ADJUSTMENTS,REMOVAL OR RELOCATION OF SIGN POST, STRUCTURES & UTILITIES WITH EACH UTILITY OWNER.
3. RECONSTRUCT CONCRETE PAVEMENT, SAWCUT ALONG EXISTING JOINTS.
4. TYPE 'A' CURB & GUTTER.
5. RESTORE RED GRAVEL TERRACE.
6. 9.67' WIDE PRIVATELY MAINTAINED BUS PAD PER ENCROACHMENT AGREEMENT.(SEE CSM DOC NO. 15990)

LEGEND

- TREE PROTECTION FENCING
- TREE REMOVAL
- PROPOSED TREE GRATE
- SAWCUT
- SIDEWALK DRAINAGE PATH
- APPROXIMATE TERRACE SUPPORT LIMIT

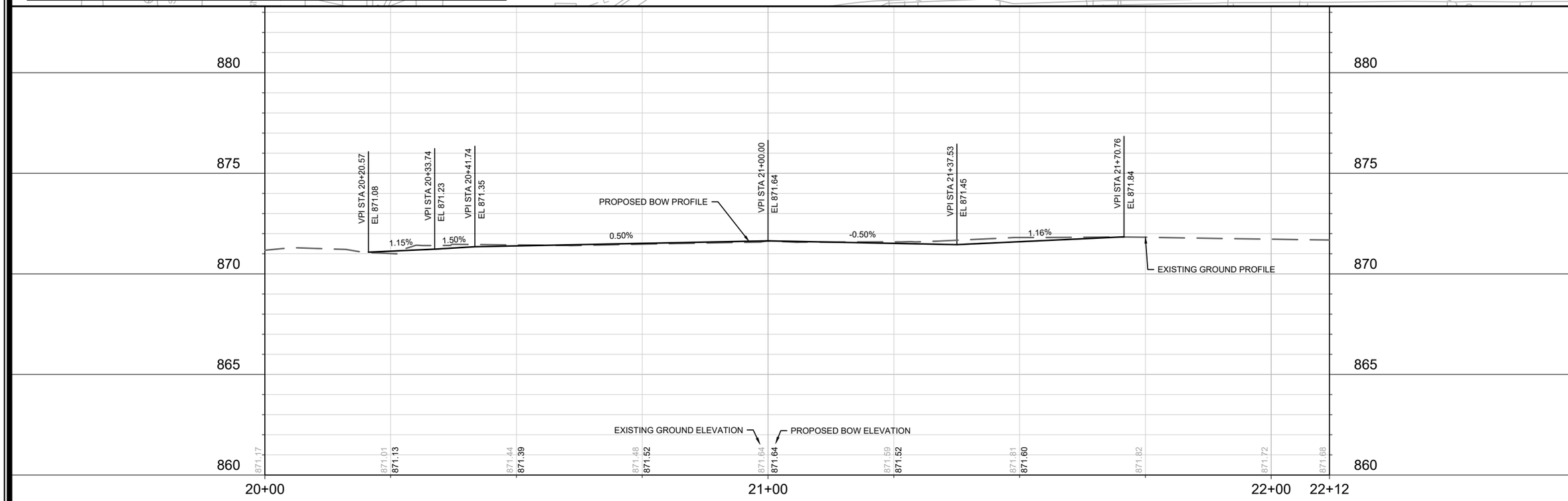

MARK	REVISION	DATE	BY
---	---	---	---
---	---	---	---
---	---	---	---
---	---	---	---

Designed By: LMC | Date: 10/13/2022 10:40 AM | Scale: 1:20 | P-1

14001

MADISON, WI

CONTRACT NO: 9140

STREET PLAN AND PROFILE - N BROOM STREET

339 W GORHAM STREET

M:\DESIGN\Projects\14001\CAD\Streets\14001EN-PnP.dwg

14001

P-1

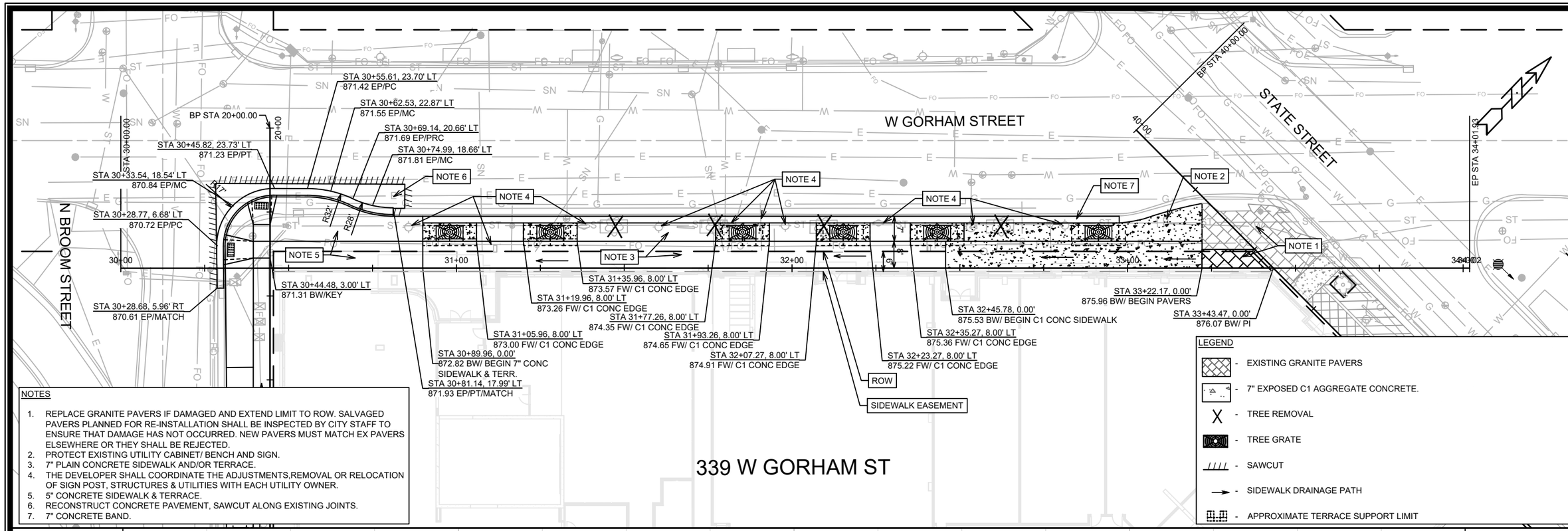

NOTES

1. REPLACE GRANITE PAVERS IF DAMAGED AND EXTEND LIMIT TO ROW. SALVAGED PAVERS PLANNED FOR RE-INSTALLATION SHALL BE INSPECTED BY CITY STAFF TO ENSURE THAT DAMAGE HAS NOT OCCURRED. NEW PAVERS MUST MATCH EX PAVERS ELSEWHERE OR THEY SHALL BE REJECTED.
2. PROTECT EXISTING UTILITY CABINET/ BENCH AND SIGN.
3. 7" PLAIN CONCRETE SIDEWALK AND/OR TERRACE.
4. THE DEVELOPER SHALL COORDINATE THE ADJUSTMENTS,REMOVAL OR RELOCATION OF SIGN POST, STRUCTURES & UTILITIES WITH EACH UTILITY OWNER.
5. 5" CONCRETE SIDEWALK & TERRACE.
6. RECONSTRUCT CONCRETE PAVEMENT, SAWCUT ALONG EXISTING JOINTS.
7. 7" CONCRETE BAND.

LEGEND

- EXISTING GRANITE PAVERS
- 7" EXPOSED C1 AGGREGATE CONCRETE.
- TREE REMOVAL
- TREE GRATE
- SAWCUT
- SIDEWALK DRAINAGE PATH
- APPROXIMATE TERRACE SUPPORT LIMIT

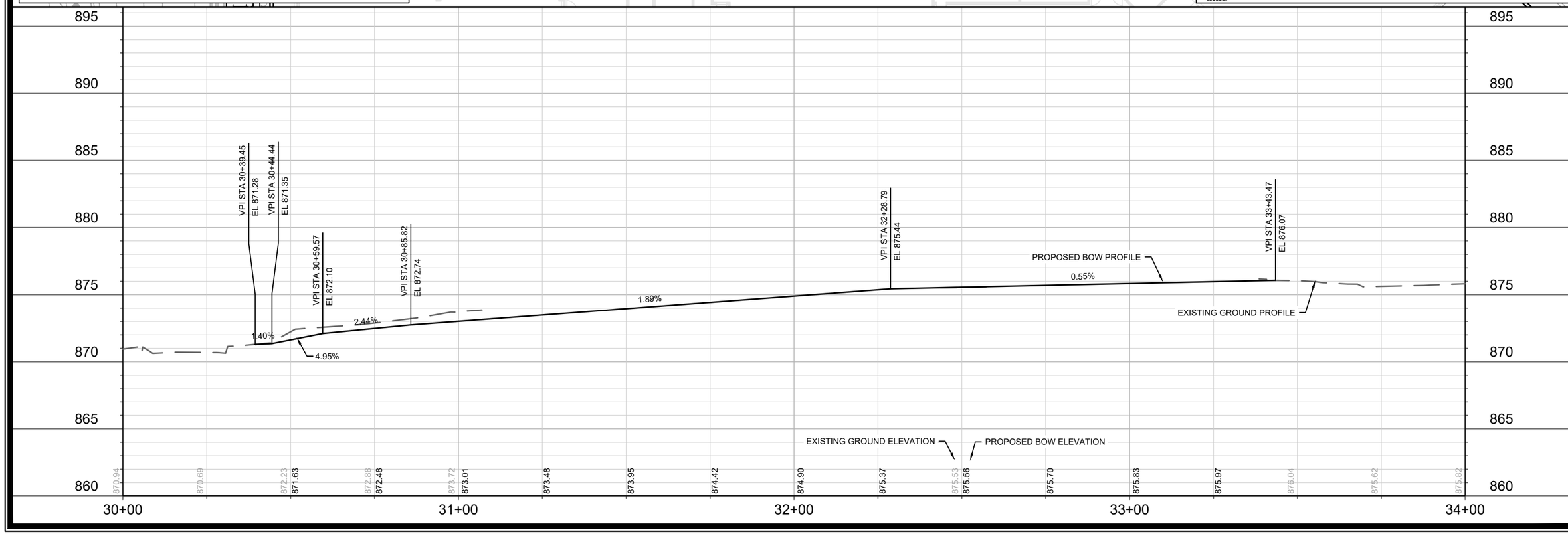

MARK	REVISION	DATE	BY
--	--	--	--
--	--	--	--
--	--	--	--
--	--	--	--

Designed By: LMC | Date: 10/4/2022 7:13 AM | Scale: 1:30

14001

14001

MADISON, WI

9140

CONTRACT NO:

STREET PLAN AND PROFILE - W GORHAM STREET

339 W GORHAM STREET

M:\DESIGN\Projects\14001\CAD\Streets\14001EN-PnP.dwg

14001

P-2

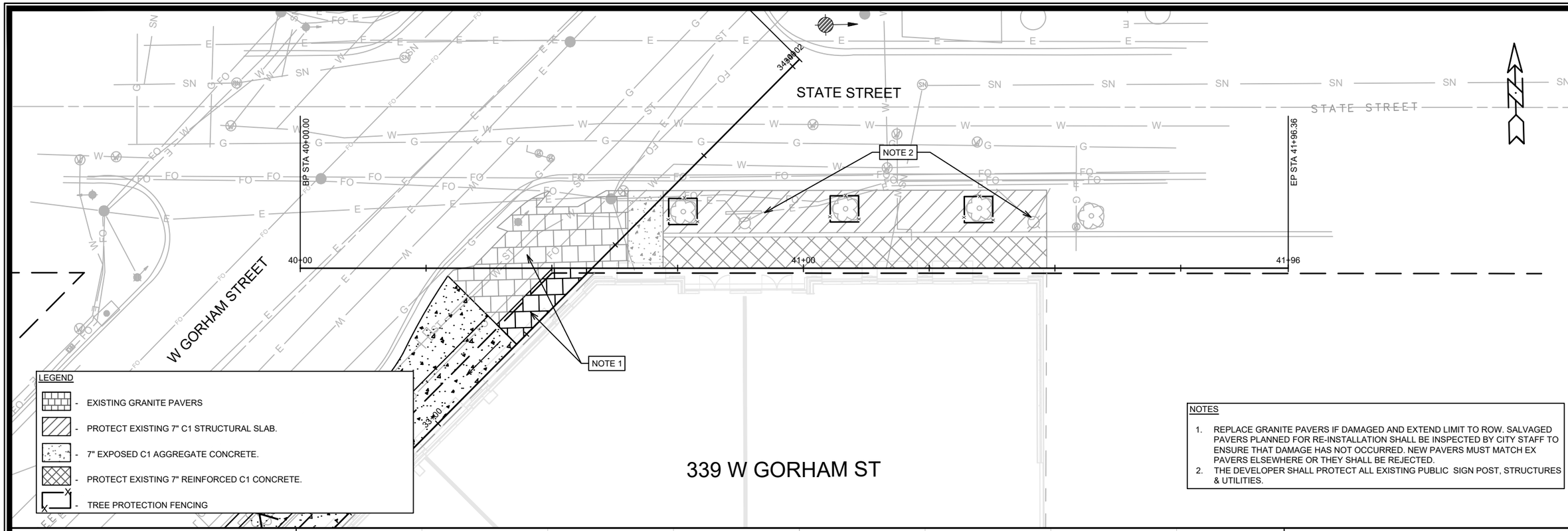

LEGEND

- EXISTING GRANITE PAVERS
- PROTECT EXISTING 7" C1 STRUCTURAL SLAB.
- 7" EXPOSED C1 AGGREGATE CONCRETE.
- PROTECT EXISTING 7" REINFORCED C1 CONCRETE.
- TREE PROTECTION FENCING

NOTES

1. REPLACE GRANITE PAVERS IF DAMAGED AND EXTEND LIMIT TO ROW. SALVAGED PAVERS PLANNED FOR RE-INSTALLATION SHALL BE INSPECTED BY CITY STAFF TO ENSURE THAT DAMAGE HAS NOT OCCURRED. NEW PAVERS MUST MATCH EX PAVERS ELSEWHERE OR THEY SHALL BE REJECTED.
2. THE DEVELOPER SHALL PROTECT ALL EXISTING PUBLIC SIGN POST, STRUCTURES & UTILITIES.

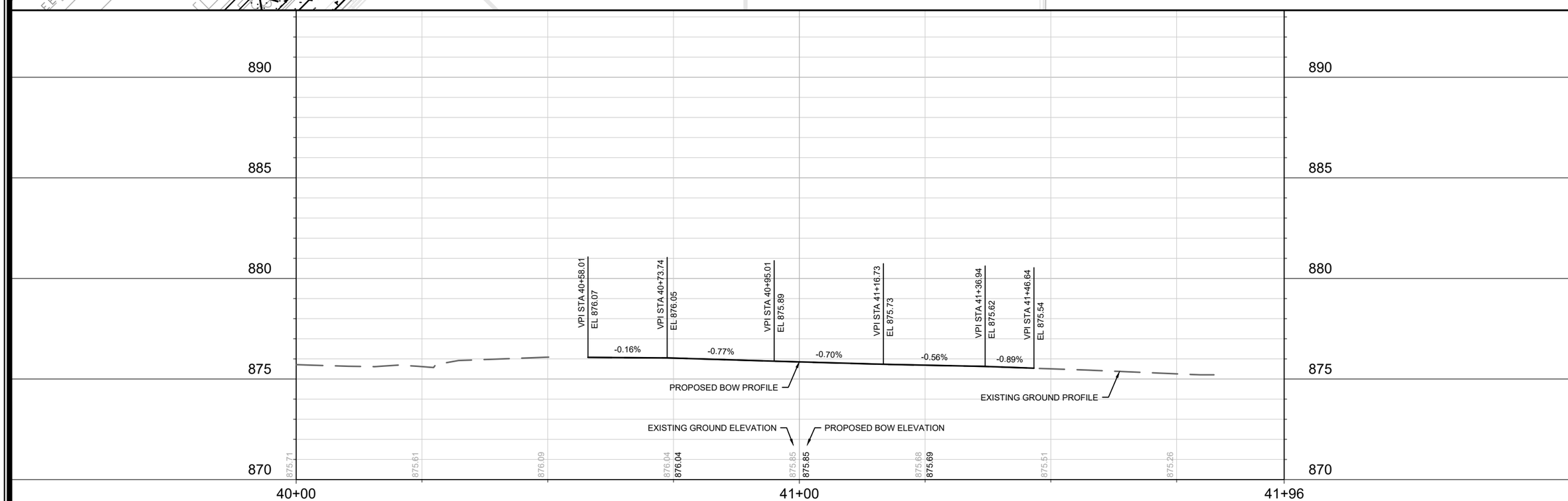

MARK	REVISION	DATE	BY
---	---	---	---
---	---	---	---
---	---	---	---
---	---	---	---

Designed By: LMC | Date: 10/4/2022 7:15 AM | Scale: 1:20

14001

P-3

14001

MADISON, WI

CONTRACT NO: 9140

STREET PLAN AND PROFILE - STATE STREET

339 W GORHAM STREET

M:\DESIGN\Projects\14001\CAD\Streets\14001EN-PnP.dwg

CITY OF MADISON WISCONSIN

14001

P-3

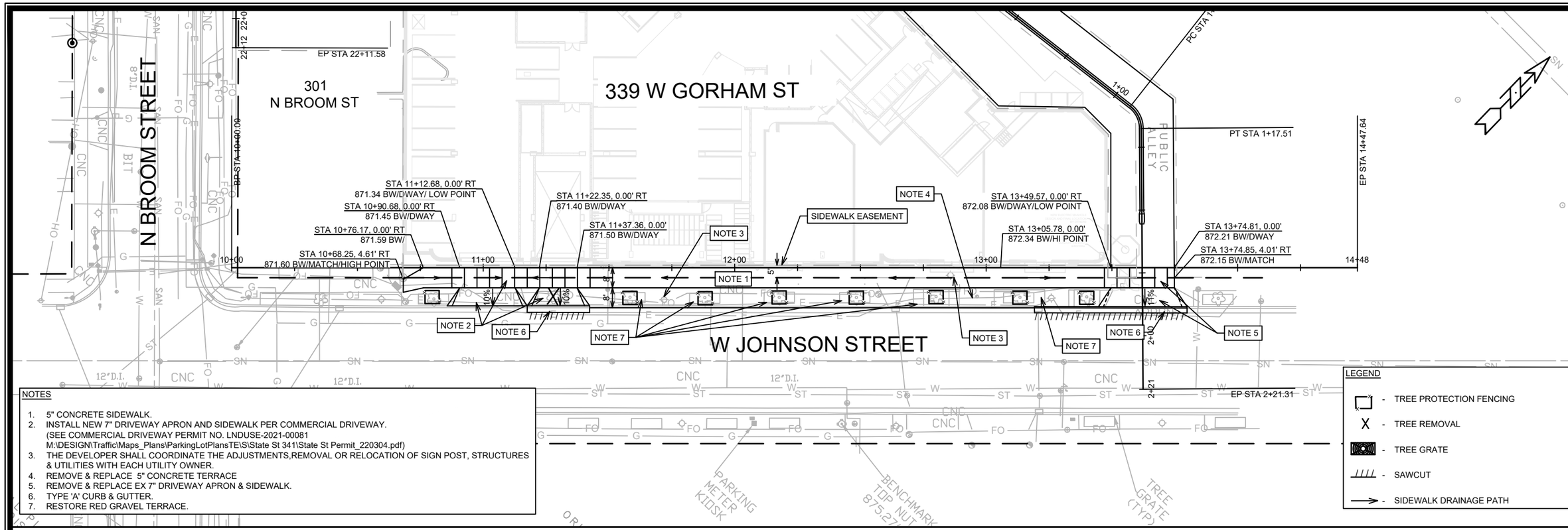

NOTES

1. 5" CONCRETE SIDEWALK.
2. INSTALL NEW 7" DRIVEWAY APRON AND SIDEWALK PER COMMERCIAL DRIVEWAY. (SEE COMMERCIAL DRIVEWAY PERMIT NO. LNDUSE-2021-00081 M:\DESIGN\Traffic\Maps_Plans\ParkingLotPlansTE\S\State St 341\State St Permit_220304.pdf)
3. THE DEVELOPER SHALL COORDINATE THE ADJUSTMENTS,REMOVAL OR RELOCATION OF SIGN POST, STRUCTURES & UTILITIES WITH EACH UTILITY OWNER.
4. REMOVE & REPLACE 5" CONCRETE TERRACE
5. REMOVE & REPLACE EX 7" DRIVEWAY APRON & SIDEWALK.
6. TYPE 'A' CURB & GUTTER.
7. RESTORE RED GRAVEL TERRACE.

LEGEND

- TREE PROTECTION FENCING
- TREE REMOVAL
- TREE GRATE
- SAWCUT
- SIDEWALK DRAINAGE PATH

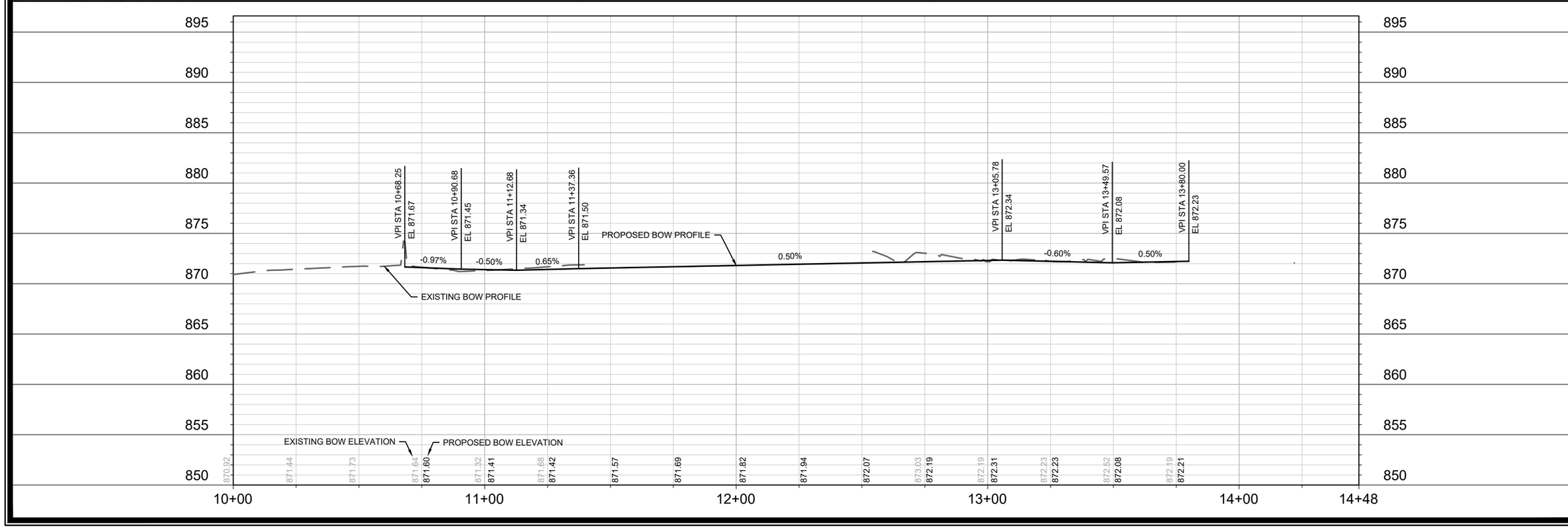

MARK	REVISION	DATE	BY
---	---	---	---
---	---	---	---
---	---	---	---
---	---	---	---
---	---	---	---

Designed By: LMC | Date: 10/25/2022 12:45 PM | Scale: 1" = 40'

14001

P-4

14001

MADISON, WI

CONTRACT NO: 9140

STREET PLAN AND PROFILE - W JOHNSON STREET

339 W GORHAM STREET

M:\DESIGN\Projects\14001\CAD\Streets\14001EN-PnP.dwg

CITY OF MADISON WISCONSIN

14001

P-4

NOTES

1. TRANSITION ALLEY C&G CROSS SLOPE TO MATCH PAVEMENT .

REVISED 2/2/23 BY IO

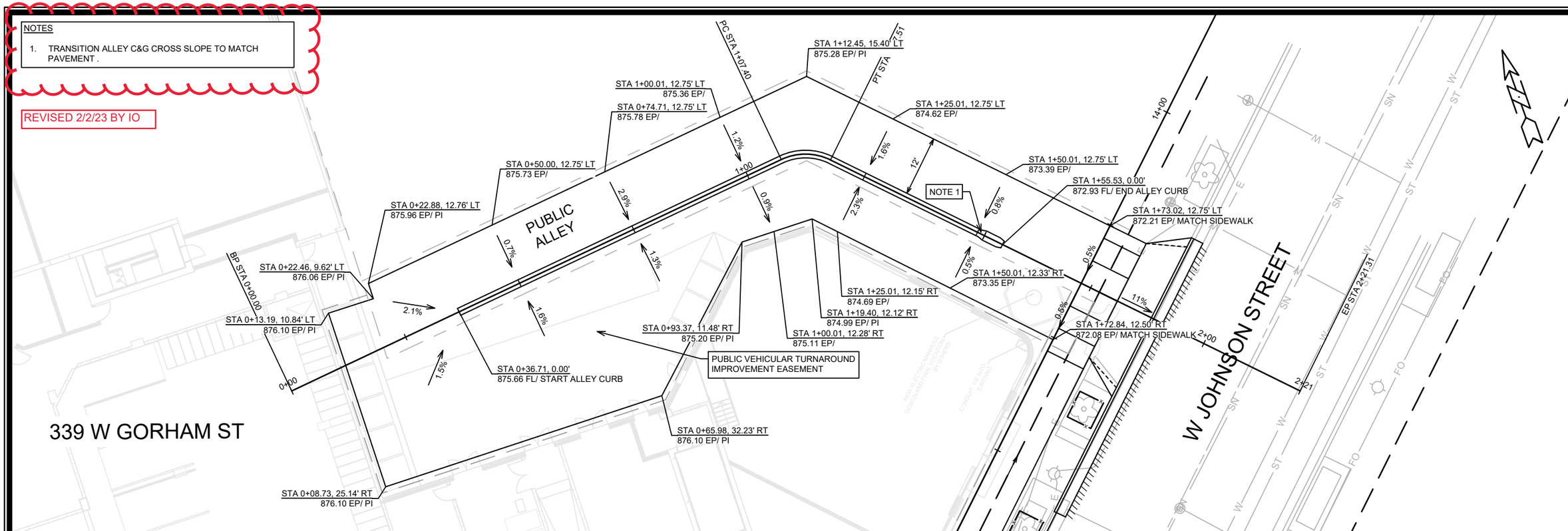

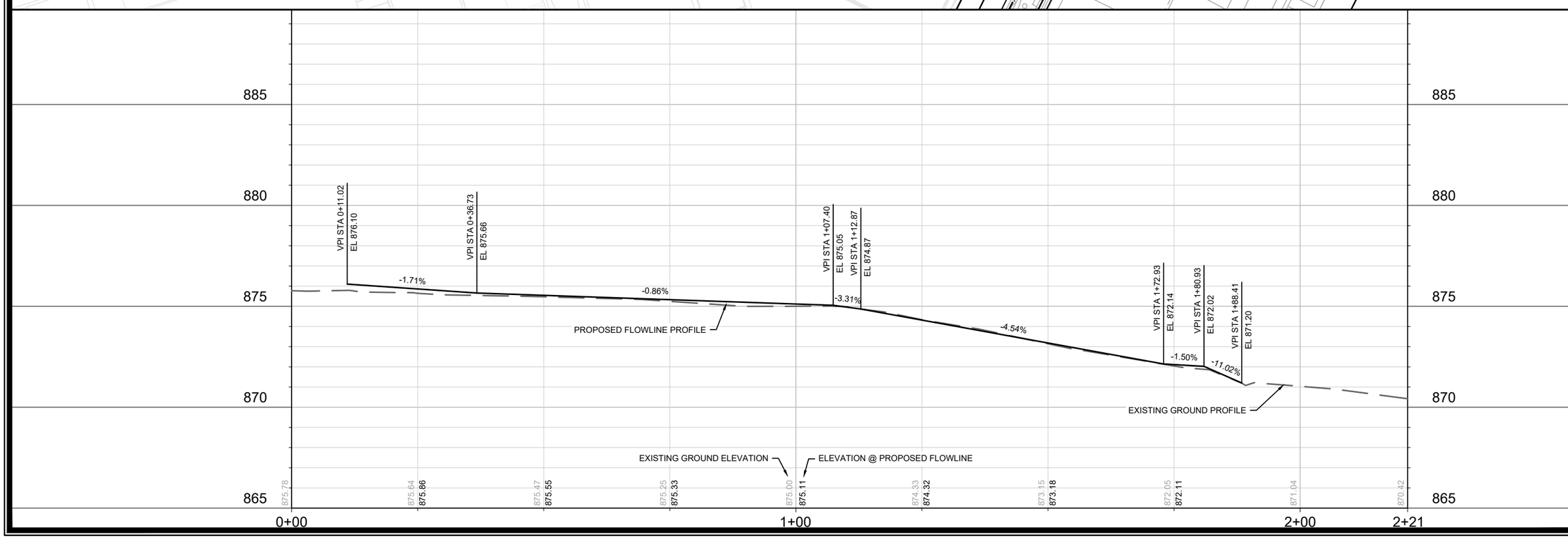

MARK	REVISION	DATE	BY
---	---	---	---
---	---	---	---
---	---	---	---
---	---	---	---
---	---	---	---

Designed By: LMC | Date: 2/23/2023 7:54 AM | Scale: 1:20 | P-5

14001

14001

MADISON, WI

CONTRACT NO: 9140

STREET PLAN AND PROFILE - W JOHNSON PUBLIC ALLEY

339 W GORHAM STREET

M:\DESIGN\Projects\14001\CAD\Streets\14001EN-PnP.dwg

CITY OF MADISON WISCONSIN

14001

P-5

NOTES:

1. SEE SHEET C-601 FOR SANITARY & WATER UTILITY DESIGN DETAILS.
2. COORDINATE INSTALLATION OF STORM SEWER CROSSINGS OF EXISTING TRAFFIC ENGINEERING CONDUITS WITH TE ELEC SHOP A MINIMUM OF 3-DAYS IN ADVANCE OF EXCAVATION. CONTACT: CHAD VEINOT (608-267-1960).

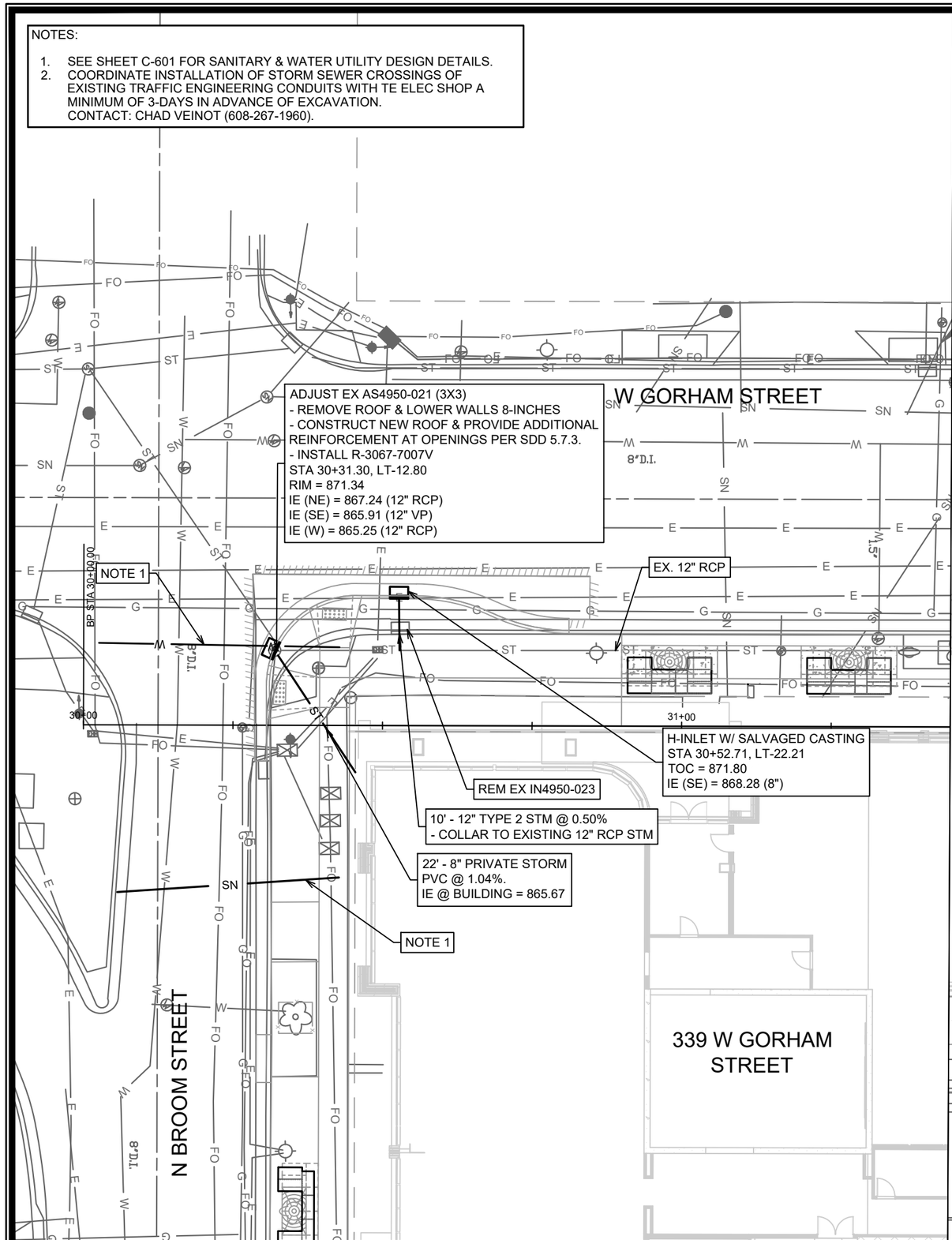

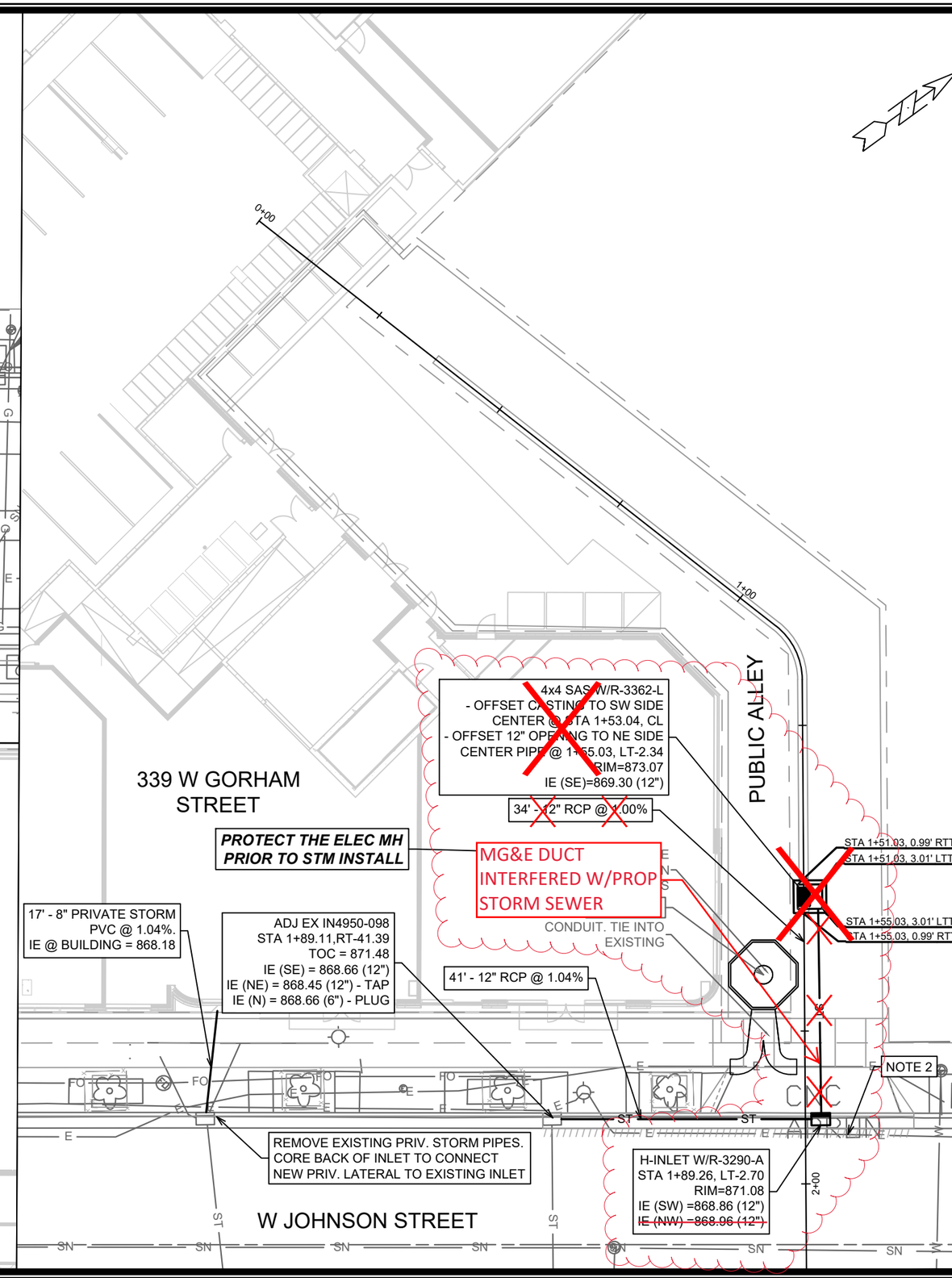

MARK	REVISION	DATE	BY
REV1	REM/PROP 4X4 STORM INLET & 12" STORM PIPES FROM PLAN	02/02/23	DAO

Designed By: IO
Date: 10/13/2022 10:25 AM
Scale: 1:20

14001

U-1

14001

MADISON, WI

CONTRACT NO: 9140

STORM SEWER PLAN

339 W GORHAM STREET

M:\DESIGN\Projects\14001\CAD\Streets\14001EN-StormUtilityPlan.dwg

14001

U-1

LEGEND

TYPE D-RF INLET PROTECTION

TRENCH PATCH TYPE III

0 10 20

INVERT = 864.29

INSTALL ELECTRONIC MARKER BALL ABOVE LATERAL AT PROPERTY LINE

IE = 860.47

301 N BROOM ST UNIT 50

W. GORHAM ST.

REMOVE AND REPLACE SIDEWALK AS NECESSARY

INSTALL 39' OF 15" SDR-26 SANITARY LATERAL @ 1.0%, PLUG AND MARK END

BENCHMARK
CHISLED "X"
ELEV = 876.48

EXISTING MG&E UTILITY VAULT

40' - 8" D.I. WATER SERVICE

REMOVE AND REPLACE CURB AS NECESSARY

SALVAGE PARKING METER; REINSTALL WITH SIDEWALK & CURB

MILL & OVERLAY WIDTH SHALL ENCOMPASS THE ENTIRE WIDTH OF ANY DISTURBED TRAFFIC LANE OR EXTENDED TO THE EDGE OF PAVEMENT WHERE NEEDED. 2" PAVEMENT GRIND

MATCH LINE 2+86

4" STEEL GAS

CAUTION CROSSING

EXTEND LATERAL TO NEW MAIN AND INSTALL ELECTRONIC MARKER BALL ABOVE WYE (TYP)

BROOM STREET

8"D.I.

BP: 0+00.00

REM. EX. 8" CIP-VP SAN

1+00

2+00

MILL & OVERLAY WIDTH SHALL ENCOMPASS THE ENTIRE WIDTH OF ANY DISTURBED TRAFFIC LANE OR EXTENDED TO THE EDGE OF PAVEMENT WHERE NEEDED. 2" PAVEMENT GRIND

CUT AND CAP EXISTING 6" (2009) WATER SERVICE AT THE END OF THE WATER MAIN; EXTEND MILL AND OVERLAY LIMITS AS NEEDED

INSTALL 8" TAPPING (GATE) VALVE

CONNECT TO EXISTING 8" WATER MAIN LIVE TAP

SAS #4

REM. EX. SAS #4950-011

INSTALL 198' OF NEW 15" SDR-26 SANITARY SEWER @ 0.46%

6" D.I.

REMOVE EX. 8" CIP-VP SANITARY PIPE

2" STEEL GAS

TRENCH PATCH TYPE III

BITUMINOUS

BENCHMARK
TOP NUT
ELEV = 874.92

BITUMINOUS

314 N BROOM ST

PROPERTY LINE (TYPICAL)

318 N BROOM ST

312 N BROOM ST

308 N BROOM ST

304 N BROOM ST UNIT 1

405 GORHAM ST

NOTES:
1. CONTRACTOR RESPONSIBLE TO RECONNECT ALL EXISTING LATERALS TO NEW MAIN.
2. CIP: CURED-IN-PLACE PIPE (CLAY PIPE WITH A LINER)

DIGGERS HOTLINE
Dial 811 or (800) 242-8511
www.DiggersHotline.com

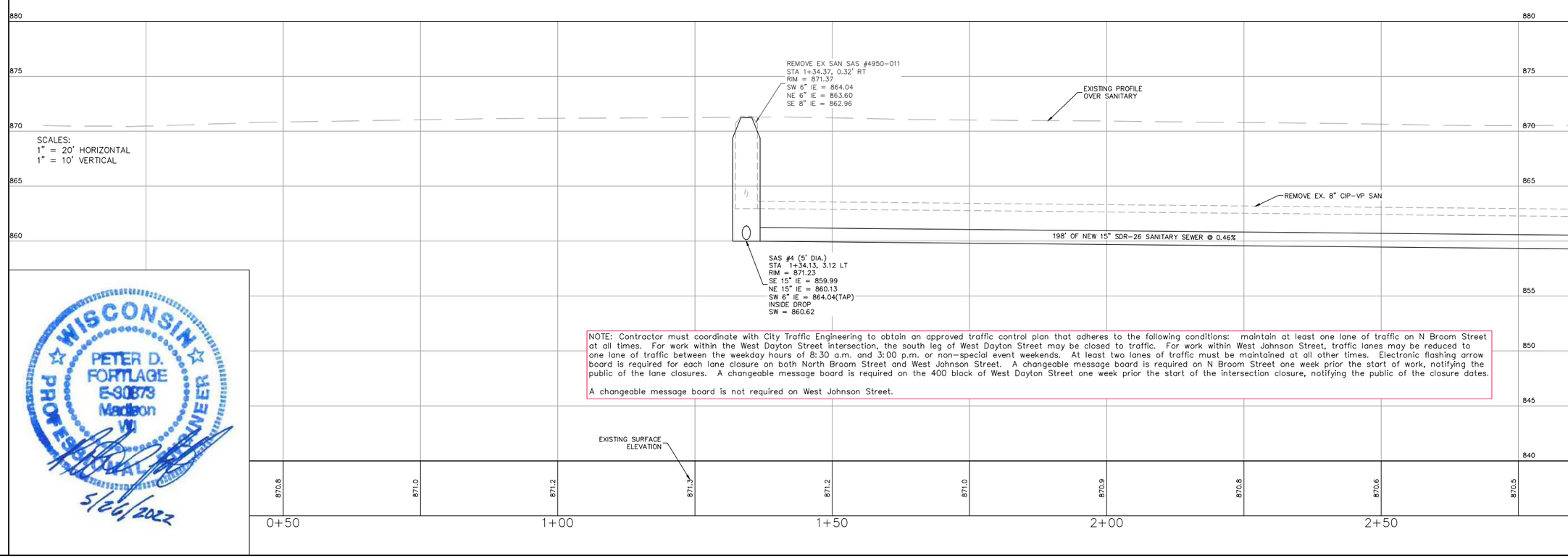

NOTE: Contractor must coordinate with City Traffic Engineering to obtain an approved traffic control plan that adheres to the following conditions: maintain at least one lane of traffic on N Broom Street at all times. For work within the West Dayton Street intersection, the south leg of West Dayton Street may be closed to traffic. For work within West Johnson Street, traffic lanes may be reduced to one lane of traffic between the weekday hours of 8:30 a.m. and 3:00 p.m. or non-special event weekends. At least two lanes of traffic must be maintained at all other times. Electronic flashing arrow board is required for each lane closure on both North Broom Street and West Johnson Street. A changeable message board is required on N Broom Street one week prior the start of work, notifying the public of the lane closures. A changeable message board is required on the 400 block of West Dayton Street one week prior the start of the intersection closure, notifying the public of the closure dates.

A changeable message board is not required on West Johnson Street.

WISCONSIN
PETER D. FORTLAGE
E-30873
Madison
WI
PROFESSIONAL ENGINEER
5/26/2022

Burse Surveying and Engineering, Inc.
2801 International Lane, Suite 101
Madison, WI 53704
Phone: 608-250-9263
Fax: 608-250-9266
e-mail: Mburse@BSE-PCnet
www.bursesurveyeng.com

APPROVALS	
PROJECT ENG:	MLB
DESIGNED BY:	DRH
DRAWN BY:	DRH
CHECKED BY:	PDF
APPROVED:	MLB

oLiv Madison
339 W. Gorham Street
Madison, WI 53703

Antunovich Associates
224 West Huron Street, Suite 7E
Chicago, IL 60654

PROJECT #: BSE2329-AA
PLOT DATE: 05/26/2022

REVISION DATES:

ISSUE DATES:
05/12/2022
05/23/2022
05/26/2022

SANITARY SEWER PLAN & PROFILE

This document contains confidential or proprietary information of Burse Surveying and Engineering, Inc. Neither the document nor the information herein is to be reproduced, distributed, used or disclosed, either in whole or in part, except as specifically authorized by Burse Surveying and Engineering, Inc.

DRAWING NUMBER

C-601

M:\BSE2329\dwg\Engineering\Broom Street P&P.dwg
Printed: May 26, 2022 - 12:11pm Printed By: Peter

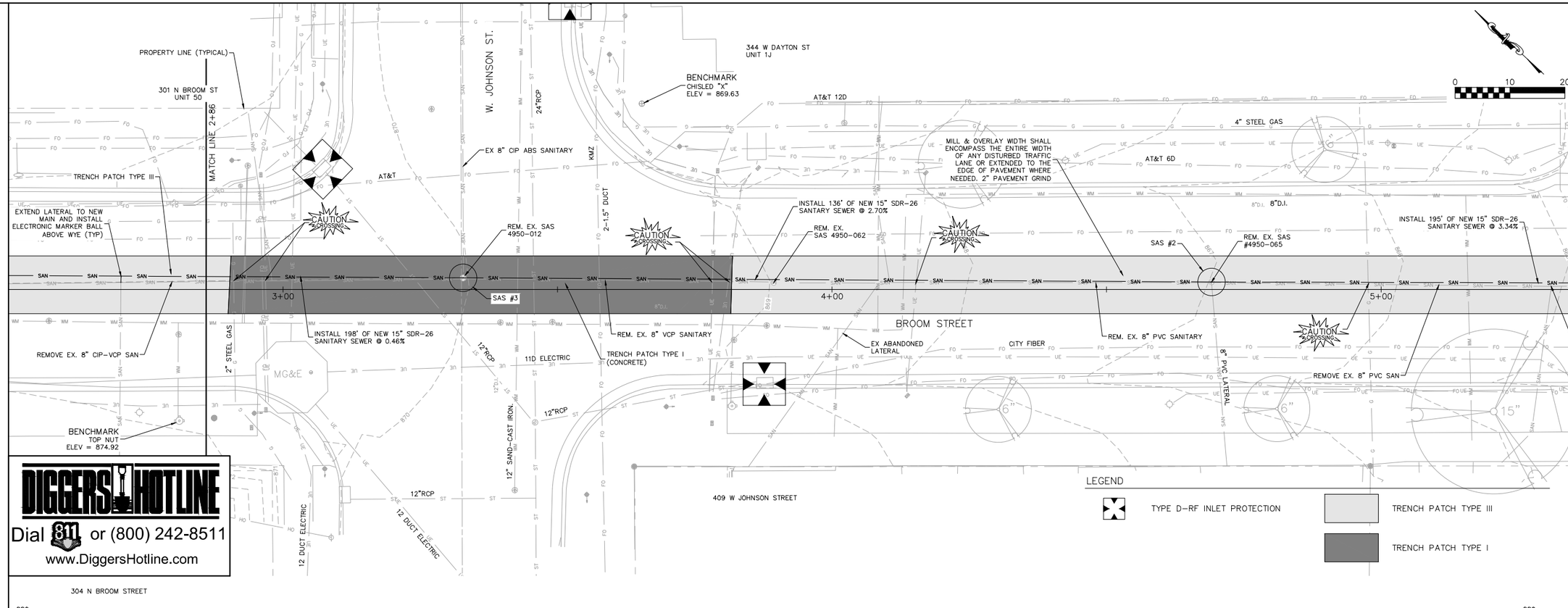

DIGGERS HOTLINE
Dial 811 or (800) 242-8511
www.DiggersHotline.com

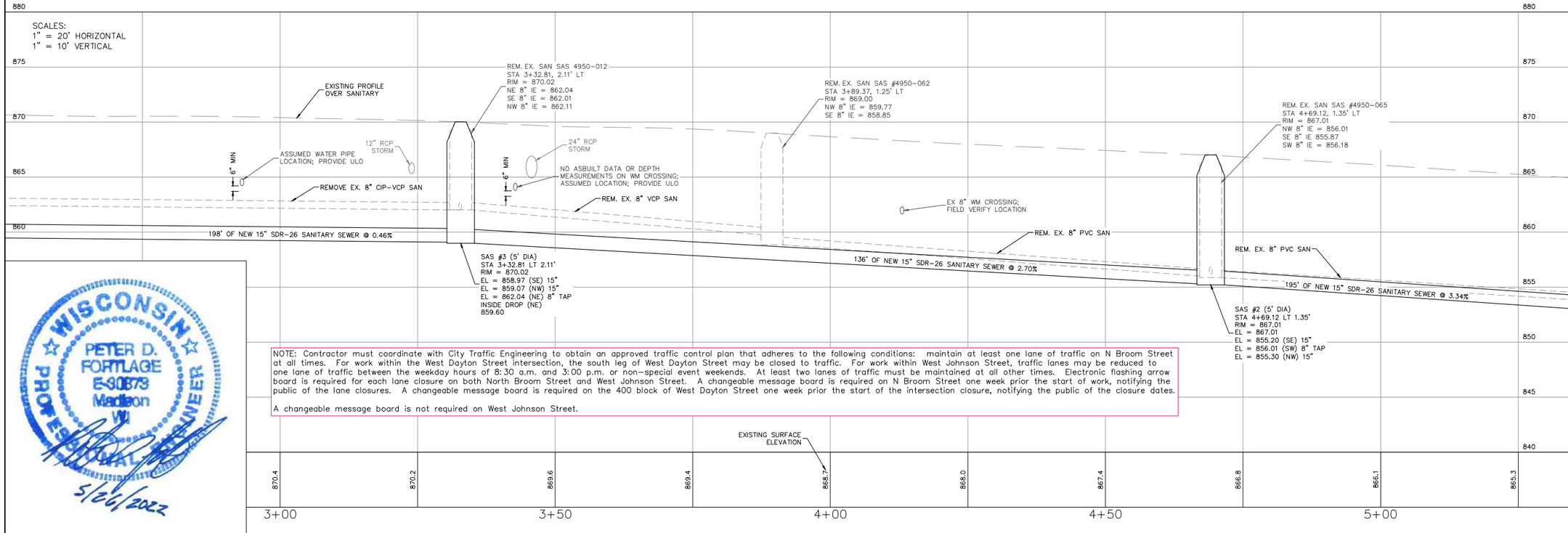

NOTE: Contractor must coordinate with City Traffic Engineering to obtain an approved traffic control plan that adheres to the following conditions: maintain at least one lane of traffic on N Broom Street at all times. For work within the West Dayton Street intersection, the south leg of West Dayton Street may be closed to traffic. For work within West Johnson Street, traffic lanes may be reduced to one lane of traffic between the weekday hours of 8:30 a.m. and 3:00 p.m. or non-special event weekends. At least two lanes of traffic must be maintained at all other times. Electronic flashing arrow board is required for each lane closure on both North Broom Street and West Johnson Street. A changeable message board is required on N Broom Street one week prior the start of work, notifying the public of the lane closures. A changeable message board is required on the 400 block of West Dayton Street one week prior the start of the intersection closure, notifying the public of the closure dates.

A changeable message board is not required on West Johnson Street.

WISCONSIN
PETER D. FORTLAGE
E-30873
Madison
WI
PROFESSIONAL ENGINEER
5/26/2022

Burse Surveying and Engineering, Inc.
2801 International Lane, Suite 101
Madison, WI 53704
Phone: 608-250-9263
Fax: 608-250-9266
e-mail: Mburse@BSE-PVCnet
www.bursesurveyeng.com

APPROVALS	
PROJECT ENG:	MLB
DESIGNED BY:	DRH
DRAWN BY:	DRH
CHECKED BY:	PDF
APPROVED:	MLB

oLiv Madison
339 W. Gorham Street
Madison, WI 53703

Antunovich Associates
224 West Huron Street, Suite 7E
Chicago, IL 60654

PROJECT #: BSE2329-AA
PLOT DATE: 05/26/2022

REVISION DATES:

ISSUE DATES:
05/12/2022
05/23/2022
05/26/2022

SANITARY SEWER
PLAN & PROFILE

This document contains confidential or proprietary information of Burse Surveying and Engineering, Inc. Neither the document nor the information herein is to be reproduced, distributed, used or disclosed, either in whole or in part, except as specifically authorized by Burse Surveying and Engineering, Inc.

DRAWING NUMBER
C-602

M:\BSE2329\dwg\Engineering\Broom Street P&P.dwg
Printed By: Peter
Printed: May 26, 2022 - 12:01pm

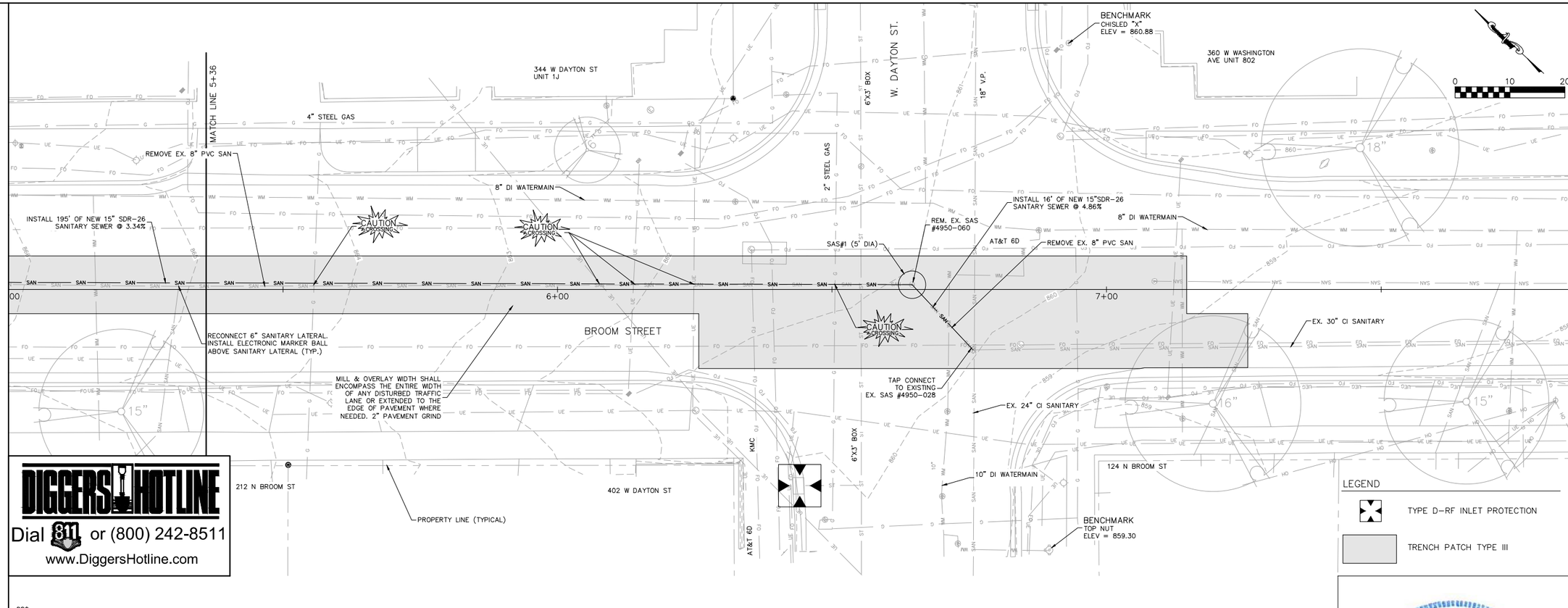

DIGGERS HOTLINE
Dial 811 or (800) 242-8511
www.DiggersHotline.com

SCALES:
1" = 20' HORIZONTAL
1" = 10' VERTICAL

NOTE: Contractor must coordinate with City Traffic Engineering to obtain an approved traffic control plan that adheres to the following conditions: maintain at least one lane of traffic on N Broom Street at all times. For work within the West Dayton Street intersection, the south leg of West Dayton Street may be closed to traffic. For work within West Johnson Street, traffic lanes may be reduced to one lane of traffic between the weekday hours of 8:30 a.m. and 3:00 p.m. or non-special event weekends. At least two lanes of traffic must be maintained at all other times. Electronic flashing arrow board is required for each lane closure on both North Broom Street and West Johnson Street. A changeable message board is required on N Broom Street one week prior the start of work, notifying the public of the lane closures. A changeable message board is required on the 400 block of West Dayton Street one week prior the start of the intersection closure, notifying the public of the closure dates.

A changeable message board is not required on West Johnson Street.

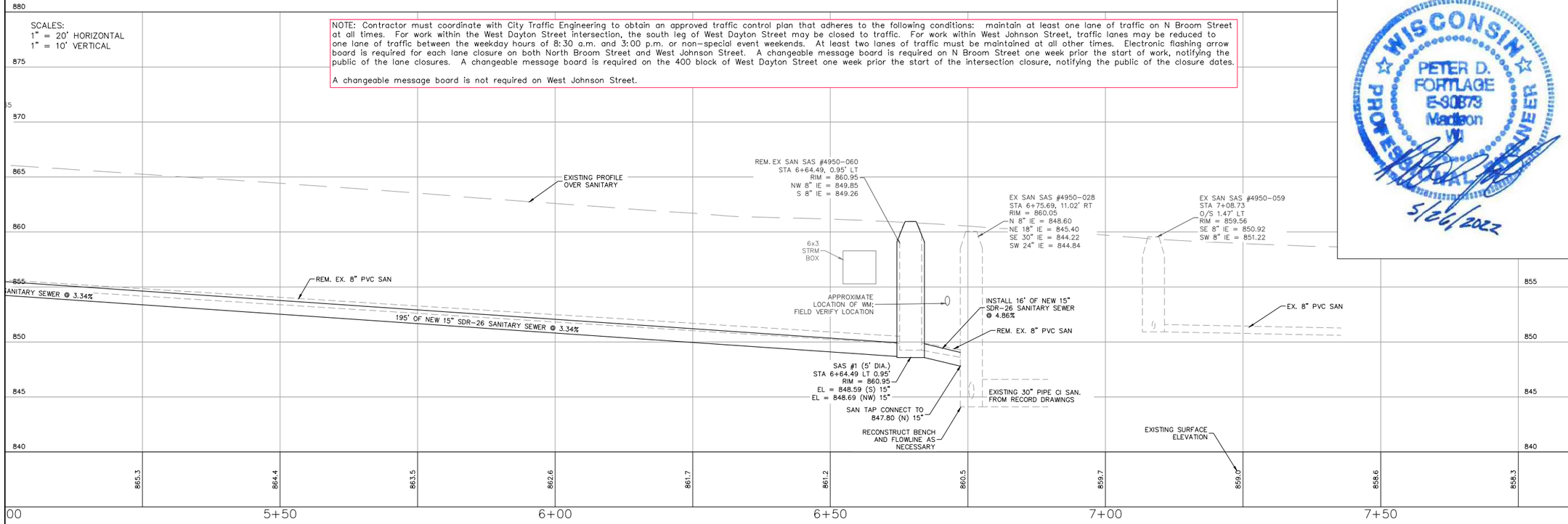

Burse
Surveying and Engineering, Inc.
2801 International Lane, Suite 101
Madison, WI 53704
Phone: 608-250-9263
Fax: 608-250-9266
e-mail: Mburse@BSE-EVCnet
www.bursesurveyeng.com

APPROVALS			
PROJECT ENG:	MLB	DESIGNED BY:	DRH
DRAWN BY:	DRH	CHECKED BY:	PDF
APPROVED:	MLB		

oLiv Madison
339 W. Gorham Street
Madison, WI 53703

Antunovich Associates
224 West Huron Street, Suite 7E
Chicago, IL 60654

WISCONSIN
PETER D. FORTLAGE
E-90873
Madison
WI
PROFESSIONAL ENGINEER
5/26/2022

PROJECT #: BSE2329-AA
PLOT DATE: 05/26/2022

REVISION DATES:

ISSUE DATES:
05/12/2022
05/23/2022
05/26/2022

SANITARY SEWER
PLAN & PROFILE

This document contains confidential or proprietary information of Burse Surveying and Engineering, Inc. Neither the document nor the information herein is to be reproduced, distributed, used or disclosed, either in whole or in part, except as specifically authorized by Burse Surveying and Engineering, Inc.

DRAWING NUMBER
C-603

M:\BSE2329\dwg\Engineering\Broom Street P&P.dwg
Printed: May 26, 2022 - 12:01pm Printed By: Peter

NOTES:

1. APPROXIMATE LIMITS OF TERRACE SUPPORT SYSTEM ARE SHOWN, FINAL LIMITS DEPENDENT ON MANUFACTURER SELECTED, DEVELOPER TO PROVIDE FINAL LAYOUT.
2. TERRACE SUPPORT SYSTEM SHALL BE TO A MINIMUM DEPTH OF 30" UNLESS OTHERWISE NOTED, DEPTH MAY BE ACHIEVED WITH A SINGLE LAYER OF CELLS OR STACKED IN 2 LAYERS.
3. PROVIDE MINIMUM 40"X80" OPENING FOR TREE PLANTING WITH 12" ROOT BARRIER AROUND OPENING.
4. PERIMETER OF SUPPORT SYSTEM SHALL BE ENCLOSED WITH GEOGRID PER MANUFACTURER'S INSTALLATION SPECIFICATIONS.
5. CONTRACTOR SHALL CONTACT CITY FORESTRY 608-266-4816 AT LEAST ONE WEEK PRIOR TO PLANTING TO SCHEDULE INSPECTING THE NURSERY STOCK AND REVIEW PLANTING SPECIFICATION WITH THE LANDSCAPER.
6. ON THIS PROJECT, THE INSTALLATION OF A PAVEMENT SUPPORT SYSTEM (SILVA CELL ®, GREENBLUE® OR EQUIVALENT AS APPROVED BY CITY) SURROUNDING TREE GRATE LOCATIONS IS REQUIRED WHERE THE TERRACE IS CONCRETE. THE CONTRACTOR SHALL CONTACT CITY FORESTRY AT (608) 266-4816 TO IDENTIFY AND LOCATE UNDERGROUND CONFLICTS (UTILITIES, VAULTS, CONDUIT) OR OTHER UNDERGROUND OBSTRUCTIONS AND DETERMINE GRATE LOCATIONS BEFORE SUPPORT SYSTEM INSTALLATION.
7. NO LATER THAN FIVE BUSINESS DAYS PRIOR TO FORMING CONCRETE AND CONSTRUCTING TREE GRATE SITES, THE CONTRACTOR SHALL CONTACT CITY FORESTRY AT (608) 266-4816 TO IDENTIFY AND LOCATE UNDERGROUND CONFLICTS (UTILITIES, VAULTS, CONDUIT) OR OTHER UNDERGROUND OBSTRUCTIONS AND DETERMINE GRATE LOCATIONS. THE CONTRACTOR WILL BE REQUIRED TO OBTAIN THE GRATE, MATCHING FRAME AND/OR TREE GUARD. TREE GRATE TYPE AND MATCHING FRAME: NEENAH 4X8 (R-8815-A). TREE GUARD NEENAH (R-8501-4818).
8. STREET TREE PRUNING SHALL BE COORDINATED WITH CITY FORESTRY AT A MINIMUM OF TWO WEEKS PRIOR TO THE START OF CONSTRUCTION FOR THIS PROJECT. CONTACT CITY FORESTRY AT (608)266-4816. ALL PRUNING SHALL FOLLOW THE AMERICAN NATIONAL STANDARDS INSTITUTE (ANSI) A300 - PART 1 STANDARDS FOR PRUNING.
9. SECTION 107.13(G) OF CITY OF MADISON STANDARD SPECIFICATIONS FOR PUBLIC WORKS CONSTRUCTION (WEBSITE: HTTPS://WWW.CITYOFMADISON.COM/BUSINESS/PW/SPECS.CFM) ADDRESSES SOIL COMPACTION NEAR STREET TREES AND SHALL BE FOLLOWED BY CONTRACTOR. THE STORAGE OF PARKED VEHICLES, CONSTRUCTION EQUIPMENT, BUILDING MATERIALS, REFUSE, EXCAVATED SPOILS OR DUMPING OF POISONOUS MATERIALS ON OR AROUND TREES AND ROOTS WITHIN FIVE (5) FEET OF THE TREE OR WITHIN THE PROTECTION ZONE IS PROHIBITED.
10. CONTRACTOR SHALL TAKE PRECAUTIONS DURING CONSTRUCTION TO NOT DISFIGURE, SCAR, OR IMPAIR THE HEALTH OF ANY STREET TREE. CONTRACTOR SHALL OPERATE EQUIPMENT IN A MANNER AS TO NOT DAMAGE THE BRANCHES OF THE STREET TREE(S). THIS MAY REQUIRE USING SMALLER EQUIPMENT AND LOADING AND UNLOADING MATERIALS IN A DESIGNATED SPACE AWAY FROM TREES ON THE CONSTRUCTION SITE. ANY DAMAGE OR INJURY TO EXISTING STREET TREES (EITHER ABOVE OR BELOW GROUND) SHALL BE REPORTED IMMEDIATELY TO CITY FORESTRY AT (608) 266-4816. PENALTIES AND REMEDIATION SHALL BE REQUIRED.
11. AS DEFINED BY THE SECTION 107.13 OF CITY OF MADISON STANDARD SPECIFICATIONS FOR PUBLIC WORKS CONSTRUCTION: NO EXCAVATION IS PERMITTED WITHIN 5 FEET OF THE TRUNK OF THE STREET TREE OR WHEN CUTTING ROOTS OVER 3 INCHES IN DIAMETER. IF EXCAVATION IS NECESSARY, THE CONTRACTOR SHALL CONTACT MADISON CITY FORESTRY AT (608) 266-4816 PRIOR TO EXCAVATION. CITY OF MADISON FORESTRY PERSONNEL SHALL ASSESS THE IMPACT TO THE TREE AND TO ITS ROOT SYSTEM PRIOR TO WORK COMMENCING. TREE PROTECTION SPECIFICATIONS CAN BE FOUND ON THE FOLLOWING WEBSITE: HTTPS://WWW.CITYOFMADISON.COM/BUSINESS/PW/SPECS.CFM
12. ALL PROPOSED STREET TREE REMOVALS WITHIN THE RIGHT OF WAY SHALL BE REVIEWED BY CITY FORESTRY BEFORE THE PLAN COMMISSION MEETING. STREET TREE REMOVALS REQUIRE APPROVAL AND A TREE REMOVAL PERMIT ISSUED BY CITY FORESTRY. ANY STREET TREE REMOVALS REQUESTED AFTER THE DEVELOPMENT PLAN IS APPROVED BY THE PLAN COMMISSION OR THE BOARD OF PUBLIC WORKS AND CITY FORESTRY WILL REQUIRE A MINIMUM OF A 72-HOUR REVIEW PERIOD WHICH SHALL INCLUDE THE NOTIFICATION OF THE ALDERPERSON WITHIN WHO'S DISTRICT IS AFFECTED BY THE STREET TREE REMOVAL(S) PRIOR TO A TREE REMOVAL PERMIT BEING ISSUED.

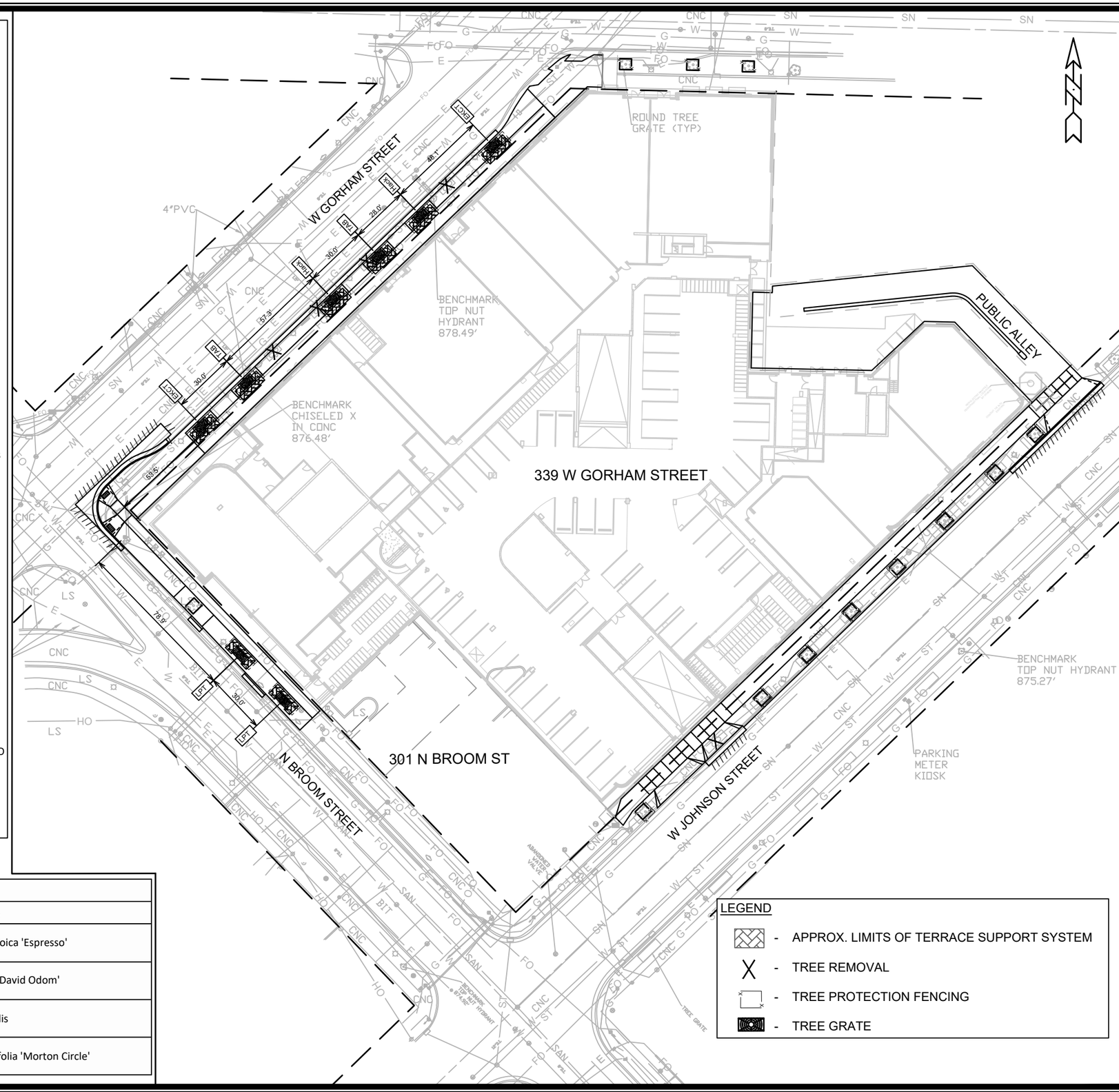

Street Tree Plant List

Code	Quantity	Size	Root	Common Name	Botancial Name
EKCT	2	0'-2"	B&B	Espresso Kentucky Coffeetree	Gymnocladus dioica 'Espresso'
TAB	2	0'-2"	B&B	Tupelo 'Afterburner'	Nyssa sylvatica 'David Odom'
Hack	2	0'-2"	B&B	Hackberry	Celtis occidentalis
LPT	2	0'-2"	B&B	London Planetree Exclamation	Platanus x acerifolia 'Morton Circle'

MARK	REVISION	DATE	BY
---	---	---	---
---	---	---	---
---	---	---	---
---	---	---	---
---	---	---	---
---	---	---	---

Designed By: LMC | Date: 9/28/2022 3:43 PM | Scale: 1:50 | L-1

14001

CONTRACT NO: 9140

MADISON, WI

LANDSCAPE PLAN

339 W GORHAM STREET

M:\DESIGN\Projects\14001\CAD\Streets\14001EN-Landscape Plan.dwg

14001

L-1

MARK	REVISION	DATE	BY
---	---	---	---
---	---	---	---
---	---	---	---
---	---	---	---

Designed By: LMC | Date: 9/6/2022 12:38 PM | Scale: 1" = 20'

14001

X-1

14001

MADISON, WI

CONTRACT NO: 9140

CROSS SECTIONS - N BROOM STREET

339 W GORHAM STREET

M:\DESIGN\Projects\14001\CAD\Streets\14001EN-Corridor.dwg

CITY OF MADISON WISCONSIN

14001

X-1

MARK	REVISION	DATE	BY
---	---	---	---
---	---	---	---
---	---	---	---
---	---	---	---

Designed By: LMC | Date: 9/6/2022 12:38 PM | Scale: 1" = 20'

14001

X-2

14001

MADISON, WI

CONTRACT NO: 9140

CROSS SECTIONS - N BROOM STREET

339 W GORHAM STREET

M:\DESIGN\Projects\14001\CAD\Streets\14001EN-Corridor.dwg

CITY OF MADISON WISCONSIN

14001

X-2

MARK	REVISION	DATE	BY
---	---	---	---
---	---	---	---
---	---	---	---
---	---	---	---

Designed By: LMC | Date: 9/6/2022 12:38 PM | Scale: 1" = 20'

14001

X-3

14001

MADISON, WI

CONTRACT NO: 9140

CROSS SECTIONS - W GORHAM STREET

339 W GORHAM STREET

M:\DESIGN\Projects\14001\CAD\Streets\14001EN-Corridor.dwg

CITY OF MADISON WISCONSIN

14001

X-3

MARK	REVISION	DATE	BY
---	---	---	---
---	---	---	---
---	---	---	---
---	---	---	---

Designed By: LMC
Date: 9/6/2022 12:38 PM
Scale: 1" = 20'

14001

X-4

14001

MADISON, WI

CONTRACT NO: 9140

CROSS SECTIONS - W GORHAM STREET

339 W GORHAM STREET

M:\DESIGN\Projects\14001\CAD\Streets\14001EN-Corridor.dwg

CITY OF MADISON WISCONSIN

14001

X-4

MARK	REVISION	DATE	BY
---	---	---	---
---	---	---	---
---	---	---	---
---	---	---	---

Designed By: LMC
Date: 9/6/2022 12:38 PM
Scale: 1" = 20'

14001

X-5

14001

MADISON, WI

CONTRACT NO: 9140

CROSS SECTIONS - W GORHAM STREET

339 W GORHAM STREET

M:\DESIGN\Projects\14001\CAD\Streets\14001EN-Corridor.dwg

CITY OF MADISON WISCONSIN

14001

X-5

MARK	REVISION	DATE	BY
---	---	---	---
---	---	---	---
---	---	---	---
---	---	---	---

Designed By: LMC | Date: 9/6/2022 12:39 PM | Scale: 1" = 20'

14001

14001

X-6

MADISON, WI

CONTRACT NO: 9140

CROSS SECTIONS - W GORHAM STREET

339 W GORHAM STREET

M:\DESIGN\Projects\14001\CAD\Streets\14001EN-Corridor.dwg

CITY OF MADISON WISCONSIN

14001

X-6

10+87.50

11+12.50

11+37.50

10+75.00

11+00.00

11+25.00

MARK	REVISION	DATE	BY
---	---	---	---
---	---	---	---
---	---	---	---
---	---	---	---

Designed By: LMC
Date: 9/28/2022 3:12 PM
Scale: 1" = 20'

14001

MADISON, WI

CONTRACT NO: 9140

CROSS SECTIONS - W JOHNSON STREET

339 W GORHAM STREET

M:\DESIGN\Projects\14001\CAD\Streets\14001EN-Corridor.dwg

14001

X-7

MARK	REVISION	DATE	BY
---	---	---	---
---	---	---	---
---	---	---	---
---	---	---	---

Designed By: LMC
Date: 9/6/2022 12:39 PM
Scale: 1" = 20'

14001

MADISON, WI

CONTRACT NO: 9140

CROSS SECTIONS - W JOHNSON STREET

339 W GORHAM STREET

M:\DESIGN\Projects\14001\CAD\Streets\14001EN-Corridor.dwg

14001

X-8

MARK	REVISION	DATE	BY
---	---	---	---
---	---	---	---
---	---	---	---
---	---	---	---

Designed By: LMC | Date: 9/6/2022 12:39 PM | Scale: 1" = 20'

14001

X-9

14001

MADISON, WI

CONTRACT NO: 9140

CROSS SECTIONS - W JOHNSON STREET

339 W GORHAM STREET

M:\DESIGN\Projects\14001\CAD\Streets\14001EN-Corridor.dwg

14001

X-9

MARK	REVISION	DATE	BY
---	---	---	---
---	---	---	---
---	---	---	---
---	---	---	---

Designed By: LMC | Date: 9/6/2022 12:39 PM | Scale: 1" = 20'

14001

X-10

14001

MADISON, WI

CONTRACT NO: 9140

CROSS SECTIONS - W JOHNSON STREET

339 W GORHAM STREET

M:\DESIGN\Projects\14001\CAD\Streets\14001EN-Corridor.dwg

14001

X-10

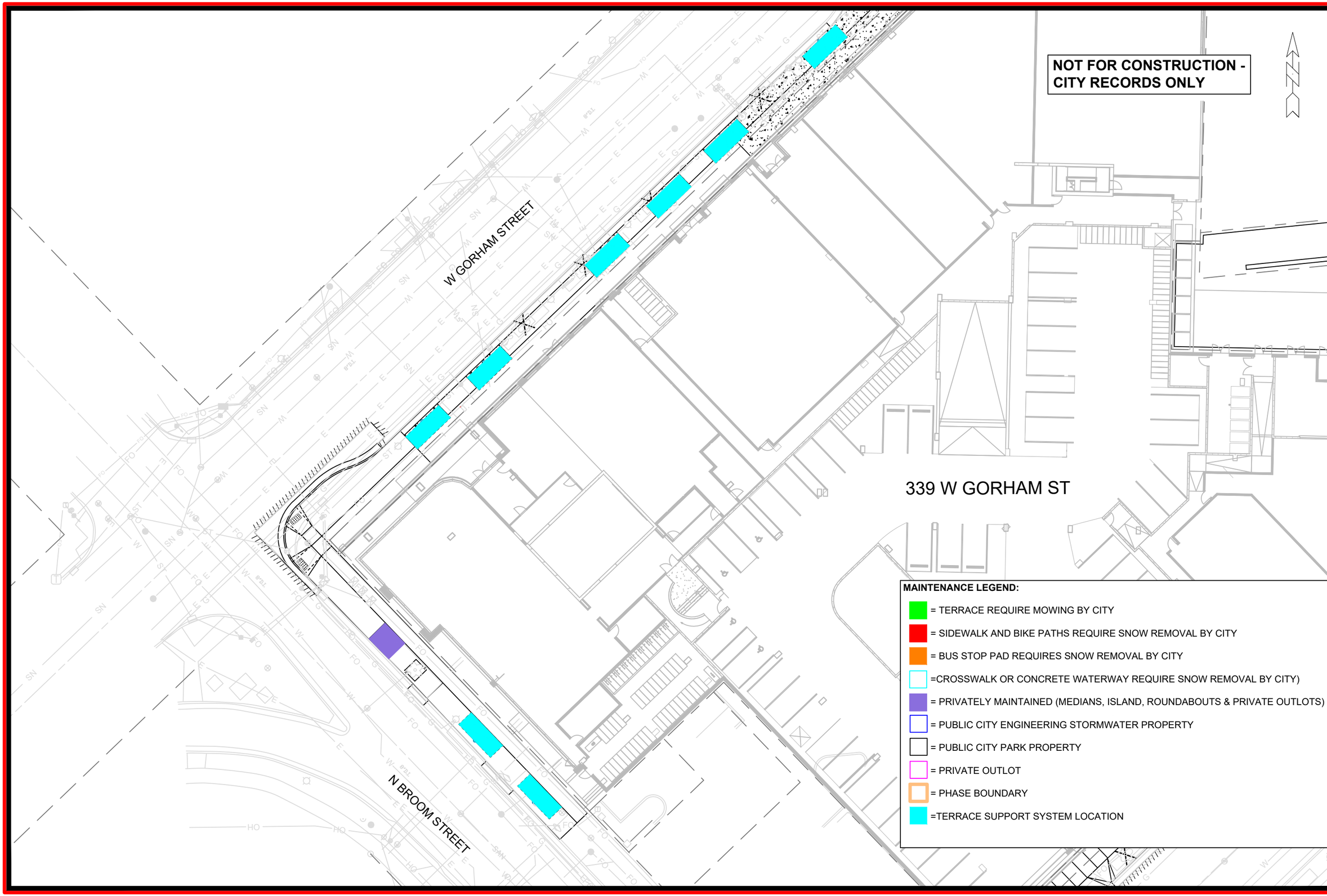

MARK	REVISION	DATE	BY
1			
2			
3			
4			
5			

Designed By: LMC | Date: 10/13/2022 11:26 AM | Scale: 1:30

14001

MADISON, WI

CONTRACT NO: 9140

MAINTENANCE PLAN

339 W GORHAM STREET

M:\DESIGN\Projects\14001\CAD\Streets\14001EN-Maintenance.dwg

14001

MN-1