Madison, Wisconsin

CITY OF MADISON
CITY ENGINEERING DIVISION
DEPARTMENT OF PUBLIC WORKS
PLAN OF PROPOSED IMPROVEMENT

832 REGENT STREET

CITY PROJECT NO. 14340
CONTRACT NO. 9212

INDEX OF SHEETS

SHEET NO.	D1	GENERAL NOTES
SHEET NO.	D2-D3	TYPICAL SECTIONS
SHEET NO.	D4	CONSTRUCTION DETAILS
SHEET NO.	E1	ELECTRICAL PLAN
SHEET NO.	P1-P3	PLAN & PROFILE
SHEET NO.	U1	UTILITY PLAN
SHEET NO.	L1	LANDSCAPE PLAN
SHEET NO.	X1-X4	CROSS SECTIONS
SHEET NO.	MN1	MAINTENANCE PLAN

PROJECT LOCATION

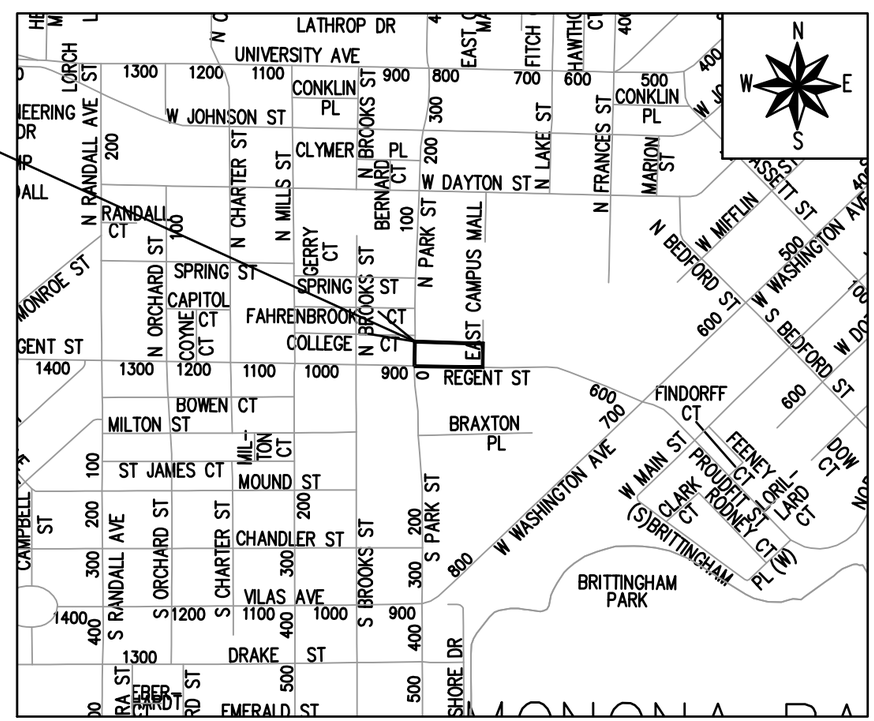

PUBLIC IMPROVEMENT PROJECT APPROVED

SEPTEMBER 20, 2022

BY THE COMMON COUNCIL OF MADISON, WISCONSIN

PUBLIC IMPROVEMENT DESIGN APPROVED BY:

City Engineer — Date: Apr 10, 2023

ELECTRICAL DESIGNED BY:

WISCONSIN
GRETCHEN M AVILES PINEIRO
E-47473
MADISON
WI
PROFESSIONAL ENGINEER

Apr 10, 2023

STREET DESIGNED BY:

WISCONSIN
FADI B EL MUSA GONZALEZ
E-47872
MADISON
WI
PROFESSIONAL ENGINEER

Apr 10, 2023

WATER DESIGNED BY:

LATERAL ONLY

STORM & SANITARY SEWER DESIGNED BY:

LATERAL ONLY

PLOT SCALE: 1 IN:1 FT_XREF
PLOT NAME: ---
REV. DATE: 3/16/2023 2:38 PM
ORIGINATOR: CITY_OF_MADISON

FILE NAME: M:\DESIGN\Projects\14340\CAD\Streets\14340EN-TitleSheet.dwg
DATE: 4/10/2023 2:18 PM

THE LOCATION AND INFORMATION FOR PROPOSED NEW TREES, IN THE PUBLIC RIGHT OF WAY OR ON PUBLIC LANDS ARE APPROXIMATE AND ARE SHOWN FOR REFERENCE ONLY. THE LOCATIONS, SPECIFICATIONS AND PLANTING METHODS OF ALL PROPOSED NEW OR REPLACEMENT TREES IN THE PUBLIC RIGHT OF WAY OR ON PUBLIC LANDS SHALL BE APPROVED BY THE CITY FORESTER PRIOR TO INSTALLATION.

NO TREES IN THE RIGHT OF WAY OR ON PUBLIC LANDS SHALL BE TRIMMED, PRUNED, REMOVED OR ADVERSELY AFFECTED IN ANY WAY UNTIL THE DEVELOPER HAS RECEIVED WRITTEN PERMISSION FROM THE CITY ENGINEER OR CITY FORESTER. SAID WRITTEN PERMISSION SHALL INCLUDE LANGUAGE INDICATING THAT SECTION 10.101 OF THE MADISON GENERAL ORDINANCES AND ADMINISTRATIVE PROCEDURE MEMORANDUM NO. 6-2, REFERRING TO NOTIFICATION OF PROPERTY OCCUPANTS AND/OR OWNERS, HAS BEEN COMPLIED WITH.

DEVELOPER MUST SUBMIT A TRAFFIC CONTROL PLAN TO CITY TRAFFIC ENGINEERING AT LEAST 14 DAYS PRIOR TO THE START OF WORK. WORK SHALL NOT PROCEED UNTIL AN APPROVED TRAFFIC CONTROL PLAN IS IN PLACE.

CONVENTIONAL SIGNS
FIELD VERIFY ALL UTILITY LOCATIONS

GAS	G
STORM SEWER	ST
SANITARY SEWER	SAN
WATER	W
BURIED ELECTRIC	E
OVERHEAD ELECTRIC	OH
POWER POLE	
ADA COMPLIANT RAMP W/ DETECTABLE WARNING FIELD	
COMBUSTIBLE FLUIDS	CAUTION

UNDERDRAINS SHALL BE INSTALLED PER STANDARD DETAIL DRAWING 4.05 FOR 75' ON EACH SIDE OF THE LOW POINT, OR TO THE NEAREST CURB HIGH POINT. ALL UNDERDRAIN SHALL BE WRAPPED.

ALL GUTTERS SHALL DRAIN WITH A MINIMUM GRADE OF 0.5% TOWARD STORM SEWER INLETS.

ALL DITCHES SHALL DRAIN WITH A MINIMUM GRADE OF 0.5%

THE CROSS SLOPE OF SIDEWALKS AND BARRIER FREE SIDEWALK CURB RAMPS SHALL TYPICALLY BE 1.5%. THE LONGITUDINAL GRADE OF BARRIER FREE SIDEWALK CURB RAMPS SHALL NOT EXCEED 8.33%. ALL SIDEWALK RAMPS SHALL BE CONSTRUCTED ACCORDING TO S.D.D. 3.04. AT ALL OTHER LOCATIONS THE LONGITUDINAL GRADE OF SIDEWALKS SHALL NOT EXCEED 5.0 % OR THE ADJACENT STREET GRADE WHICHEVER IS GREATER NOR BE LESS THAN 0.5% AND SHALL DRAIN TOWARD STORM SEWER INLETS. SIDE SLOPES WITHIN TEN FEET OF A PUBLIC SIDEWALK SHALL NOT EXCEED 4:1. ALL SIDEWALK AND SIDEWALK RAMP ELEVATIONS AND GRADES SHALL BE FIELD VERIFIED AND SET TO COMPLY WITH THE CITY OF MADISON STANDARD SPECIFICATIONS AND THE A.D.A. GUIDELINES.

OBTAIN A PRINT OUT OF THE ALIGNMENTS FROM THE CITY PROJECT ENGINEER PRIOR TO STAKING THIS PROJECT. THE CITY PROJECT ENGINEER IS IKE OKAFOR, EMAIL: IOKAFOR@CITYOFMADISON.COM

CURB STATION AND OFFSETS SHALL BE TO THE EDGE OF PAVEMENT UNLESS OTHERWISE INDICATED. CURB ELEVATIONS SHALL BE TO THE EDGE OF PAVEMENT UNLESS OTHERWISE INDICATED.

POWER POLES AND OTHER OBSTRUCTIONS SHALL BE MOVED TO PROVIDE 2 FEET MINIMUM OF CLEAR DISTANCE FROM ANY FACE OF CURB OR EDGE OF SIDEWALK UNLESS OTHERWISE INDICATED ON THE PLANS.

ANY INFORMATION SHOWN ON THIS PLAN, WHICH IS NOT PART OF THIS RIGHT-OF-WAY PROJECT, IS PRELIMINARY AND NOT FOR CONSTRUCTION.

THERE MAY BE EXISTING UTILITIES OR OTHER FEATURES WHICH ARE EITHER NOT SHOWN OR SHOWN INCORRECTLY ON THIS PLAN. IT IS THE RESPONSIBILITY OF THE DEVELOPER TO LOCATE AND IDENTIFY ALL UTILITIES AND TOPOGRAPHY WHICH MAY AFFECT THE CONSTRUCTION OF THESE IMPROVEMENTS.

ALL PERMANENT SIGNING AND POSTING WILL BE DETERMINED AND PROVIDED BY THE TRAFFIC ENGINEERING DIVISION, FOLLOWING CONSTRUCTION OF THESE IMPROVEMENTS.

THE DEVELOPER SHALL PROVIDE, INSTALL AND MAINTAIN ALL STREET END BARRICADES, SIGNING AND TRAFFIC CONTROL, AS REQUIRED BY THE CITY TRAFFIC ENGINEER.

PAVEMENT SAWCUTS SHALL BE AS DIRECTED BY THE CITY CONSTRUCTION ENGINEER. SAWCUTS SHOWN ON THE PLAN ARE APPROXIMATE.

CURB ON CUL DE SACS SHALL BE INSTALLED ACCORDING TO S.D.D 3.05.

ALL WORK IN THE RIGHT OF WAY AND PUBLIC EASEMENTS SHALL BE IN ACCORDANCE WITH THE CITY OF MADISON STANDARD SPECIFICATIONS FOR PUBLIC WORKS CONSTRUCTION LATEST EDITION.

ALL PROPOSED IMPROVEMENTS IN THE RIGHT-OF-WAY ARE BASED ON SURVEY DATA PROVIDED BY THE DEVELOPER OR ITS CONSULTANT. IN THE CASE THAT THE PROPOSED IMPROVEMENTS CAN NOT BE INSTALLED PER THESE PLANS OR THE CITY OF MADISON STANDARD SPECIFICATION FOR PUBLIC WORKS CONSTRUCTION, LATEST EDITION, THE DEVELOPER SHALL BE RESPONSIBLE FOR THE COST OF EXTRA WORK DUE TO INACCURACIES OF THE SURVEY.

ALL UTILITY VERIFICATIONS AND ACCURACY OF THE DRAWINGS ARE THE RESPONSIBILITY OF THE DEVELOPER. ANY CONFLICTS THAT ARISE FROM MISSING OR ERRONEOUS INFORMATION WILL BE AT THE EXPENSE OF THE DEVELOPER. NO PRECAST STRUCTURES WILL BE APPROVED FOR STORM OR SANITARY SEWER UNTIL ALL POTENTIAL UTILITY CONFLICTS ARE RESOLVED.

MARK	REVISION	DATE	BY
---	---	---	---
---	---	---	---
---	---	---	---
---	---	---	---

Designed By: IO
Date: 2/16/2023 12:35 PM
Scale:
14340
D-1

14340

MADISON, WI

CONTRACT NO: 9212

GENERAL NOTES

832 REGENT STREET

M:\DESIGN\Projects\14340\CAD\Streets\14340EN-Details.dwg

14340

D-1

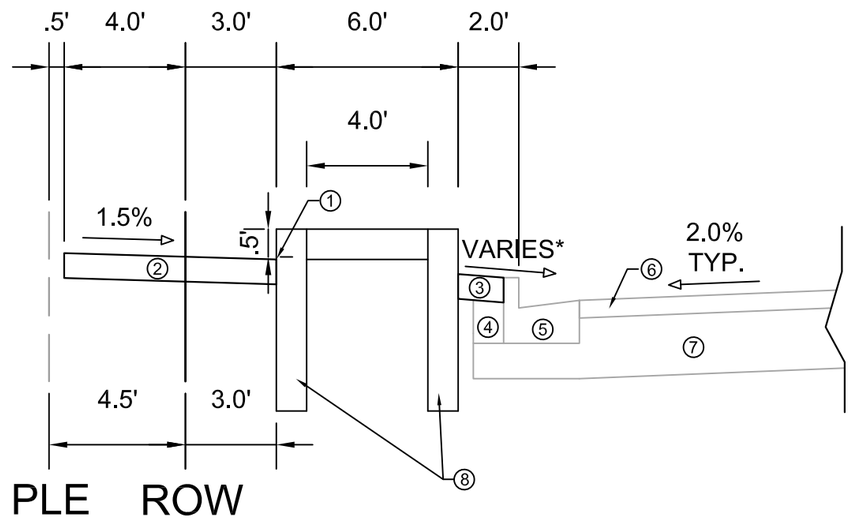

TYPICAL SECTION

REGENT ST SIDEWALK W/ PLANTERS
(NOT TO SCALE)

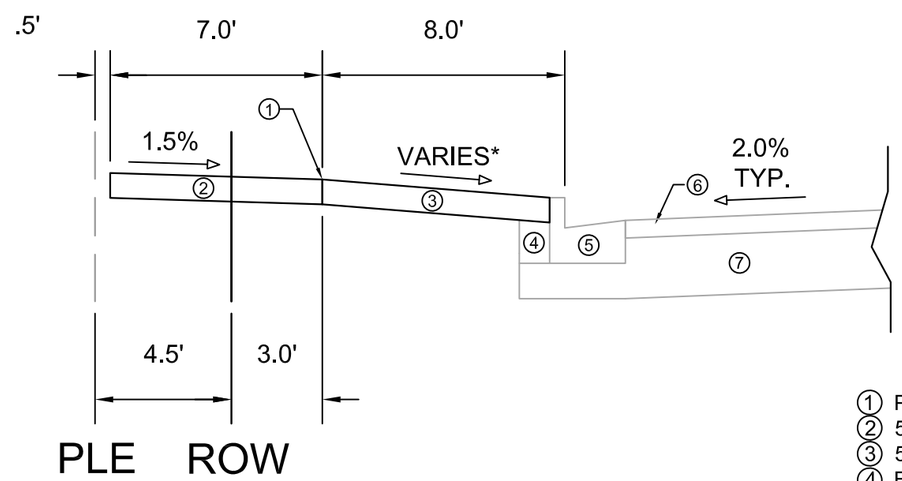

TYPICAL SECTION

REGENT ST SIDEWALK
(NOT TO SCALE)

SPECIAL NOTES:

* SEE X-SHEETS FOR CROSS SLOPES

1. POINT REFERRED TO ON PROFILE.
2. 5" CONCRETE SIDEWALK.
3. 5" CONCRETE TERRACE.
4. EXISTING FILL TO REMAIN, INSTALL AT CURB REPLACEMENT LOCATIONS.
5. EXISTING CURB & GUTTER TYPE A, REPLACE AT LOCATIONS SHOWN IN P SHEETS OR AS DETERMINED BY THE ENGINEER.
6. EXISTING ASPHALTIC PAVEMENT TO REMAIN.
7. EXISTING ROAD BASE TO REMAIN.
8. CONCRETE PLANTERS BY OTHERS (SEE SHEET D-4)

MARK	REVISION	DATE	BY
--	--	--	--
--	--	--	--
--	--	--	--
--	--	--	--

Designed By: IO
Date: 3/16/2023 9:38 AM
Scale:
14340
D-2

14340

MADISON, WI

CONTRACT NO: 9212

TYPICAL SECTIONS

832 REGENT STREET

M:\DESIGN\Projects\14340\CAD\Streets\14340EN-Details.dwg

14340

D-2

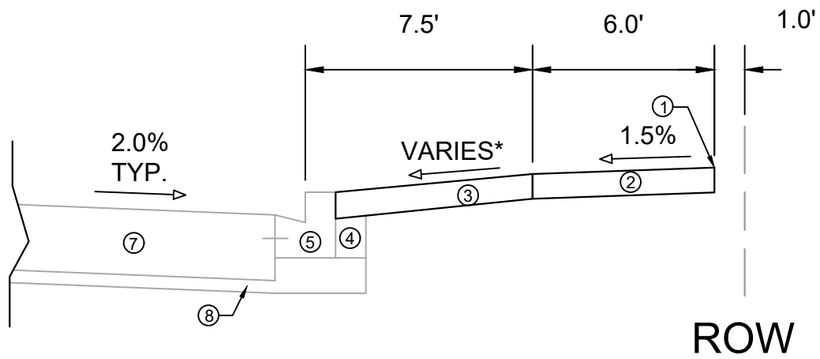

TYPICAL SECTION

N PARK ST SIDEWALK
(NOT TO SCALE)

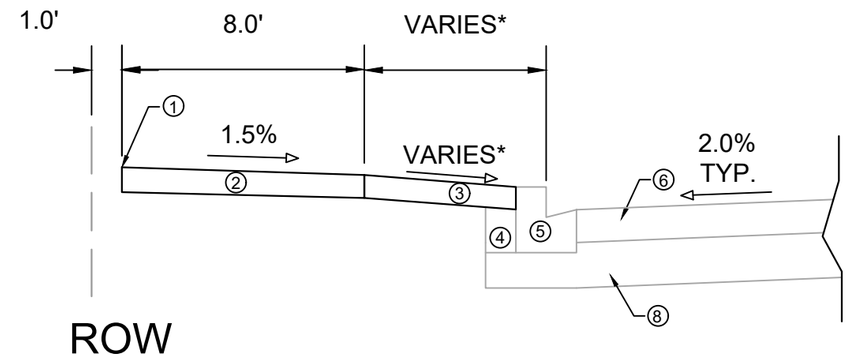

TYPICAL SECTION

E CAMPUS MALL SIDEWALK
(NOT TO SCALE)

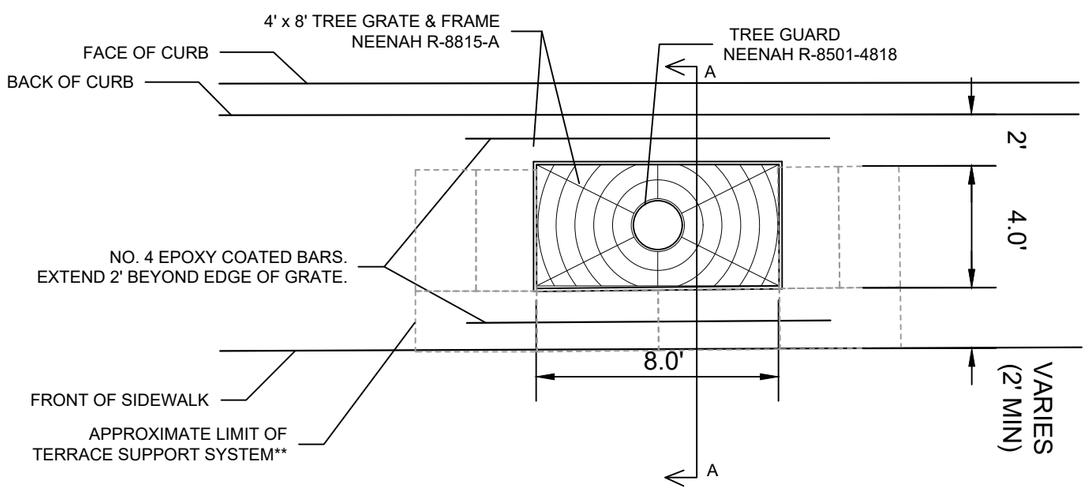

PLAN VIEW

TREE GRATE INSTALLATION DETAIL
(NOT TO SCALE)

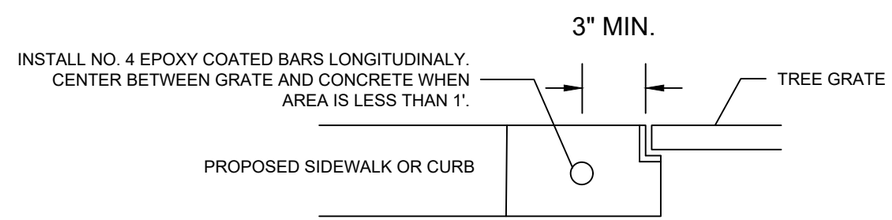

SECTION A-A

CONCRETE REINFORCING DETAIL
FOR TREE GRATE
(NOT TO SCALE)

SPECIAL NOTES:

* SEE X-SHEETS FOR CROSS SLOPES
** SEE S.D.D. 2.16 FOR TERRACE SUPPORT SYSTEM DETAIL.

1. POINT REFERRED TO ON PROFILE.
2. 5" CONCRETE SIDEWALK.
3. 5" CONCRETE TERRACE.
4. EXISTING FILL TO REMAIN, INSTALL AT CURB REPLACEMENT LOCATIONS.
5. EXISTING CURB & GUTTER TYPE H, REPLACE AT LOCATIONS SHOWN IN P SHEETS OR AS DETERMINED BY THE ENGINEER.
6. EXISTING ASPHALTIC PAVEMENT TO REMAIN.
7. EXISTING CONCRETE PAVEMENT TO REMAIN.
8. EXISTING ROAD BASE TO REMAIN.

MARK	REVISION	DATE	BY
---	---	---	---
---	---	---	---
---	---	---	---
---	---	---	---

Designed By: IO | Date: 3/16/2023 9:40 AM | Scale: | D-3

14340

MADISON, WI

CONTRACT NO: 9212

TYPICAL SECTIONS

832 REGENT STREET

M:\DESIGN\Projects\14340\CAD\Streets\14340EN-Details.dwg

14340

D-3

©Vierbicher Associates, Inc.

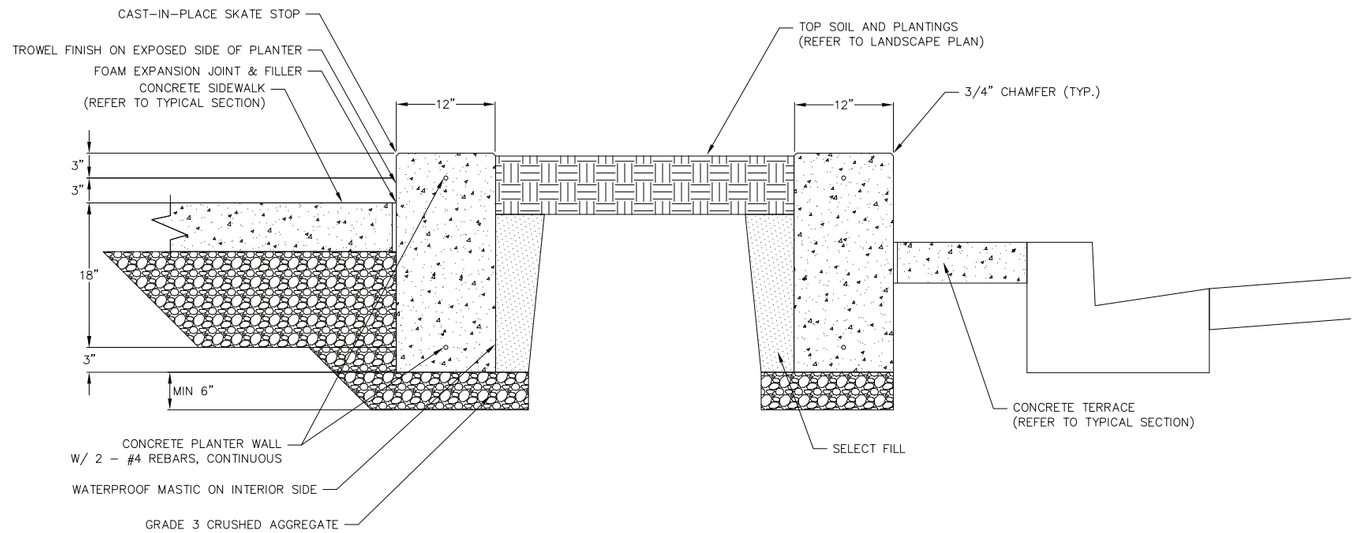

1 / 1 REGENT STREET PLANTER DETAIL
NOT TO SCALE

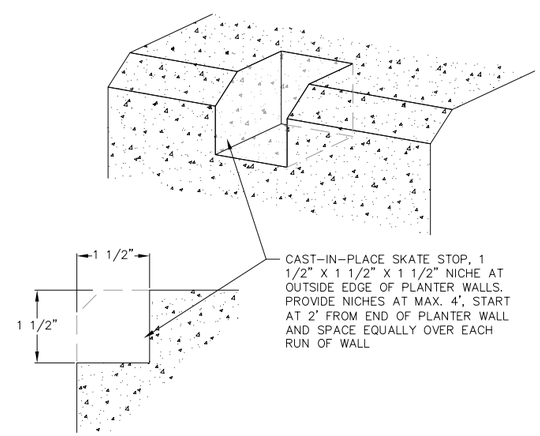

1 / 1 CAST–IN–PLACE SKATE STOP
NOT TO SCALE

WISCONSIN
JOHNATHAN LILLEY
E-48363
MADISON
WI
PROFESSIONAL ENGINEER

Johnathan Lilley
03/16/2023

vierbicher
planners engineers advisors

Construction Details
832 Regent Street
City of Madison
Dane County, Wisconsin

REVISIONS		
NO.	DATE	REMARKS

REVISIONS		
NO.	DATE	REMARKS

DATE 03–16–2023
DRAFTER BHAN
CHECKED JLIL
PROJECT NO. 200332

D-4

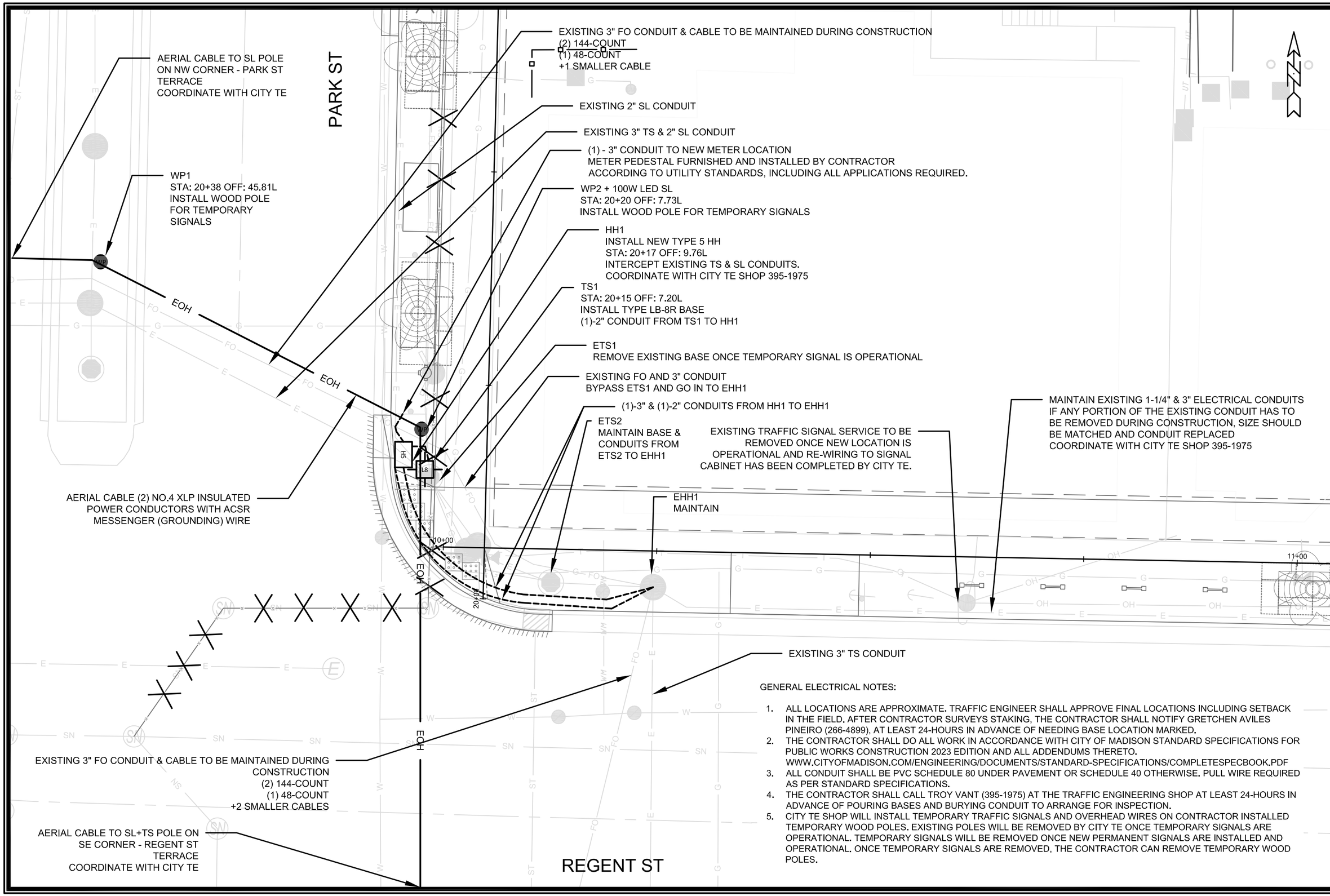

GENERAL ELECTRICAL NOTES:

1. ALL LOCATIONS ARE APPROXIMATE. TRAFFIC ENGINEER SHALL APPROVE FINAL LOCATIONS INCLUDING SETBACK IN THE FIELD. AFTER CONTRACTOR SURVEYS STAKING, THE CONTRACTOR SHALL NOTIFY GRETCHEN AVILES PINEIRO (266-4899), AT LEAST 24-HOURS IN ADVANCE OF NEEDING BASE LOCATION MARKED.
2. THE CONTRACTOR SHALL DO ALL WORK IN ACCORDANCE WITH CITY OF MADISON STANDARD SPECIFICATIONS FOR PUBLIC WORKS CONSTRUCTION 2023 EDITION AND ALL ADDENDUMS THERETO. WWW.CITYOFMADISON.COM/ENGINEERING/DOCUMENTS/STANDARD-SPECIFICATIONS/COMPLETESPECBOOK.PDF
3. ALL CONDUIT SHALL BE PVC SCHEDULE 80 UNDER PAVEMENT OR SCHEDULE 40 OTHERWISE. PULL WIRE REQUIRED AS PER STANDARD SPECIFICATIONS.
4. THE CONTRACTOR SHALL CALL TROY VANT (395-1975) AT THE TRAFFIC ENGINEERING SHOP AT LEAST 24-HOURS IN ADVANCE OF POURING BASES AND BURYING CONDUIT TO ARRANGE FOR INSPECTION.
5. CITY TE SHOP WILL INSTALL TEMPORARY TRAFFIC SIGNALS AND OVERHEAD WIRES ON CONTRACTOR INSTALLED TEMPORARY WOOD POLES. EXISTING POLES WILL BE REMOVED BY CITY TE ONCE TEMPORARY SIGNALS ARE OPERATIONAL. TEMPORARY SIGNALS WILL BE REMOVED ONCE NEW PERMANENT SIGNALS ARE INSTALLED AND OPERATIONAL. ONCE TEMPORARY SIGNALS ARE REMOVED, THE CONTRACTOR CAN REMOVE TEMPORARY WOOD POLES.

MARK	REVISION	DATE	BY
---	---	---	---

Designed By: GMA | Date: 2/15/2023 3:29 PM | Scale: 1" = 10'

14340

MADISON, WI

CONTRACT NO: 9212

ELECTRICAL PLAN

832 REGENT STREET

M:\DESIGN\Projects\14340\CAD\Traffic\14340TE-Electrical.dwg

14340

E-1

NOTE

1. THE DEVELOPER WILL BE RESPONSIBLE FOR COORDINATING THE REMOVAL, REPLACEMENT, RELOCATION OR ADJUSTMENTS OF UTILITIES & ROAD SIGNS WITH OWNER.
2. REMOVE AND REPLACE WITH TYPE 'A' CURB & GUTTER.
3. 5" CONCRETE SIDEWALK & TERRACE. INSTALL 7" CONCRETE TERRACE AT BUS PAD.
4. REMOVE EX. DRIVEWAY APRONS PER DRIVEWAY PERMIT.
   (SEE COMMERCIAL DRIVEWAY PERMIT NO. LNDUSE-2022-00038
   M:\DESIGN\Traffic\Maps_Plans\ParkingLotPlansTE\R\Regent St 802-832\Regent St 802 Permit_230126.pdf)
5. BICYCLE RACKS TO BE PARALLEL TO SIDEWALK AND A MINIMUM OF 4' FROM THE FACE OF CURB.

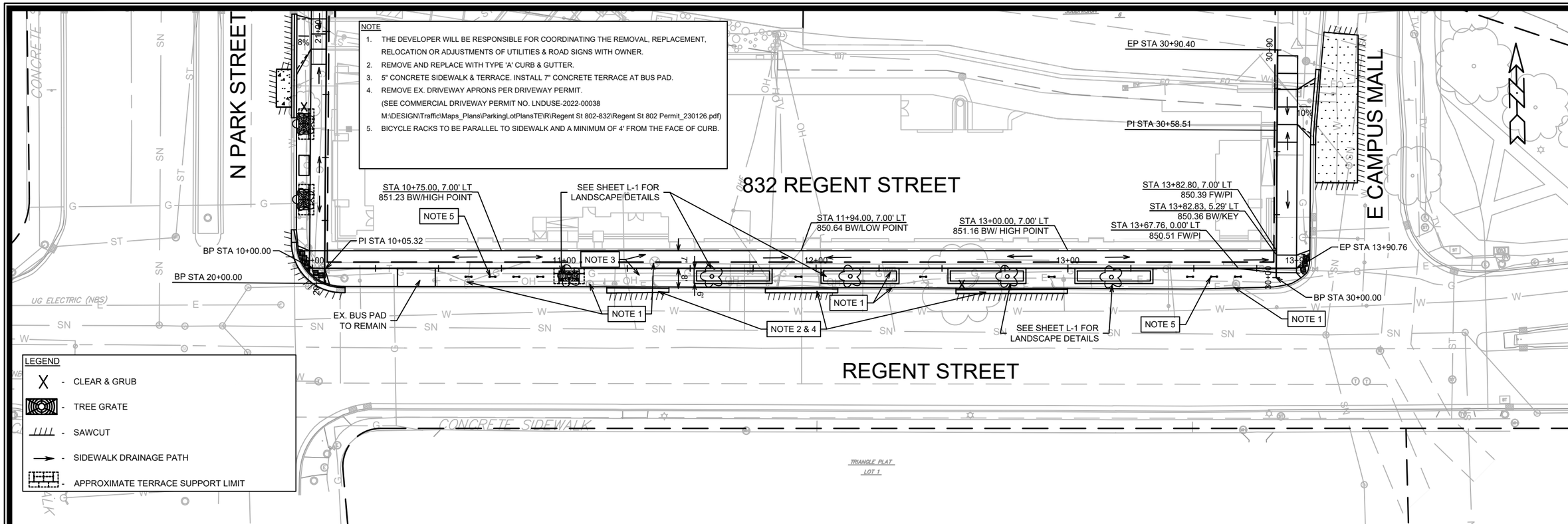

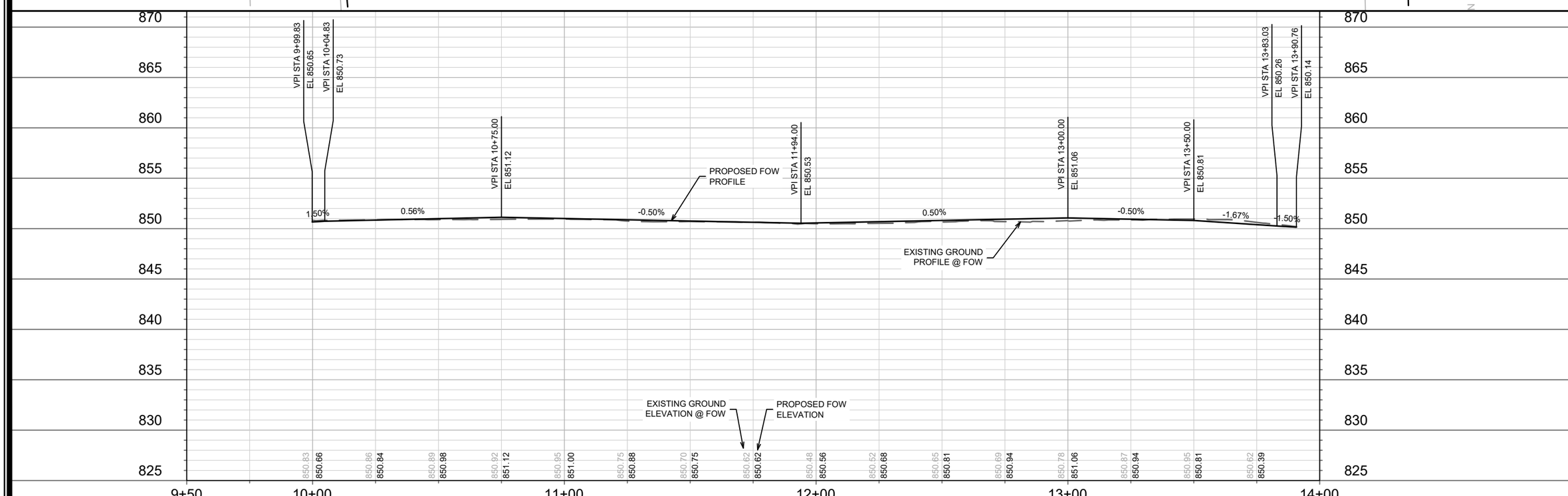

MARK	REVISION	DATE	BY
---	---	---	---
---	---	---	---
---	---	---	---
---	---	---	---

Designed By: FBEG Date: 4/6/2023 10:38 AM Scale: 1" = 40'

14340

P-1

14340

MADISON, WI

CONTRACT NO: 9212

PLAN & PROFILE - REGENT STREET

832 REGENT STREET

M:\DESIGN\Projects\14340\CAD\Streets\14340EN-PnP.dwg

CITY OF MADISON WISCONSIN

14340

P-1

NOTE

1. THE DEVELOPER WILL BE RESPONSIBLE FOR COORDINATING THE REMOVAL, REPLACEMENT, RELOCATIONS OR ADJUSTMENTS OF UTILITIES & ROAD SIGNS WITH OWNER.
2. REMOVE AND REPLACE WITH TYPE 'H' CURB & GUTTER.
3. 5" CONCRETE SIDEWALK & TERRACE. INSTALL 7" CONCRETE TERRACE AT BUS SHELTER & LOADING ZONE.
4. 7" DRIVEWAY APRON & SIDEWALK PER DRIVEWAY PERMIT.
   (SEE COMMERCIAL DRIVEWAY PERMIT NO. LNDUSE-2022-00038
   M:\DESIGN\Traffic\Maps_Plans\ParkingLotPlansTE\R\Regent St 802-832\Regent St 802 Permit_230126.pdf)
5. CONCRETE PAVEMENT RECONSTRUCTION PER SECTION 404.5 OF THE CITY OF MADISON STANDARD SPECIFICATION FOR PUBLIC WORKS CONSTRUCTION, LATEST EDITION.

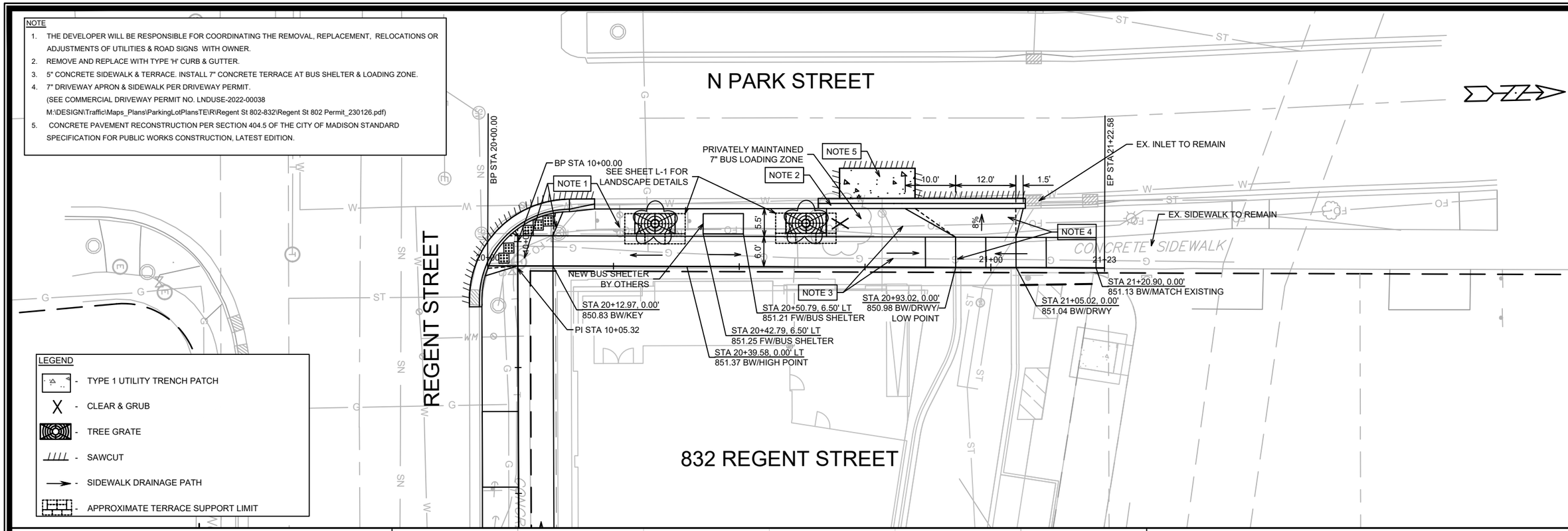

LEGEND

- TYPE 1 UTILITY TRENCH PATCH
- CLEAR & GRUB
- TREE GRATE
- SAWCUT
- SIDEWALK DRAINAGE PATH
- APPROXIMATE TERRACE SUPPORT LIMIT

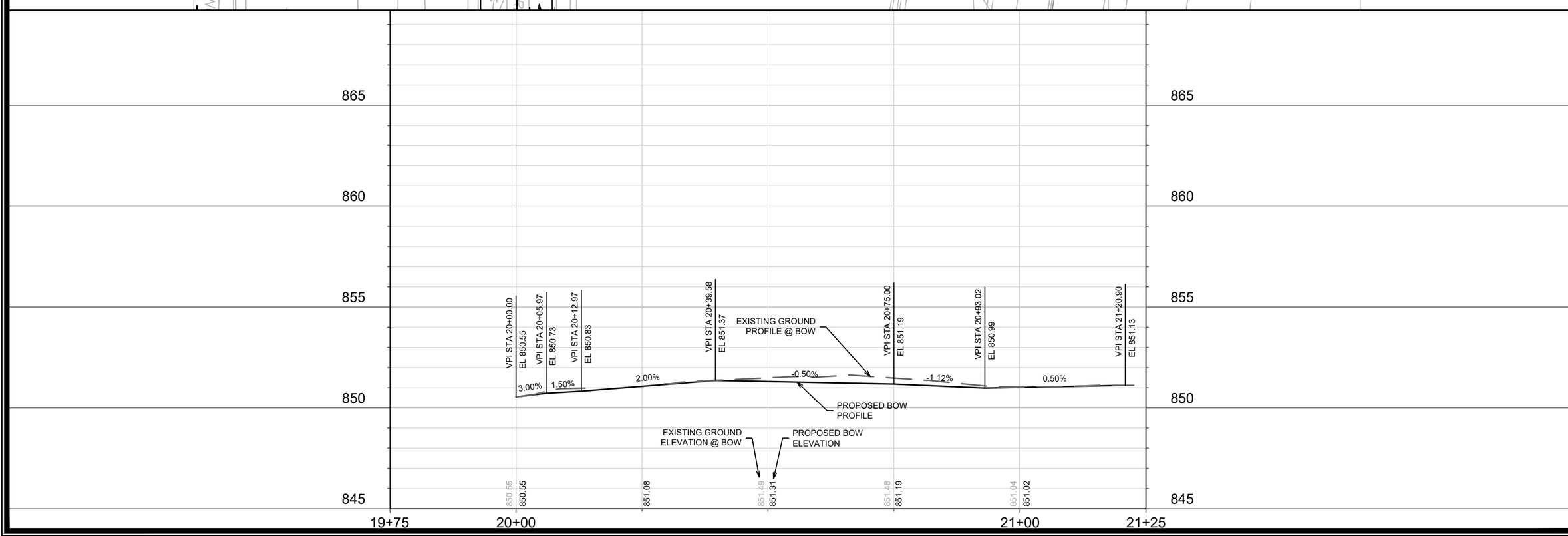

MARK	REVISION	DATE	BY
---	---	---	---
---	---	---	---
---	---	---	---
---	---	---	---

Designed By: FBEG Date: 3/1/2023 11:38 AM Scale: 1:20

14340

MADISON, WI

CONTRACT NO: 9212

PLAN & PROFILE - N PARK STREET

832 REGENT STREET

M:\DESIGN\Projects\14340\CAD\Streets\14340EN-PnP.dwg

14340

P-2

NOTE

1. THE DEVELOPER WILL BE RESPONSIBLE FOR COORDINATING THE REMOVAL, REPLACEMENT, RELOCATIONS OR ADJUSTMENTS OF UTILITIES & ROAD SIGNS WITH OWNER.
2. REMOVE AND REPLACE WITH TYPE 'H' CURB & GUTTER.
3. 5" CONCRETE SIDEWALK & TERRACE.
4. 7" DRIVEWAY APRON & SIDEWALK PER DRIVEWAY PERMIT. (SEE COMMERCIAL DRIVEWAY PERMIT NO. LNDUSE-2022-00038 M:\DESIGN\Traffic\Maps_Plans\ParkingLotPlansTE\R\Regent St 802-832\Regent St 802 Permit_230126.pdf)
5. LIMITS SHOWN FOR MILL & OVERLAY ARE ESTIMATED, ACTUAL LIMITS SHALL BE DETERMINED BY THE CONSTRUCTION ENGINEER.

LEGEND

- SAWCUT
- SIDEWALK DRAINAGE PATH
- 2" MILL & OVERLAY (4 LT 58-28 S)

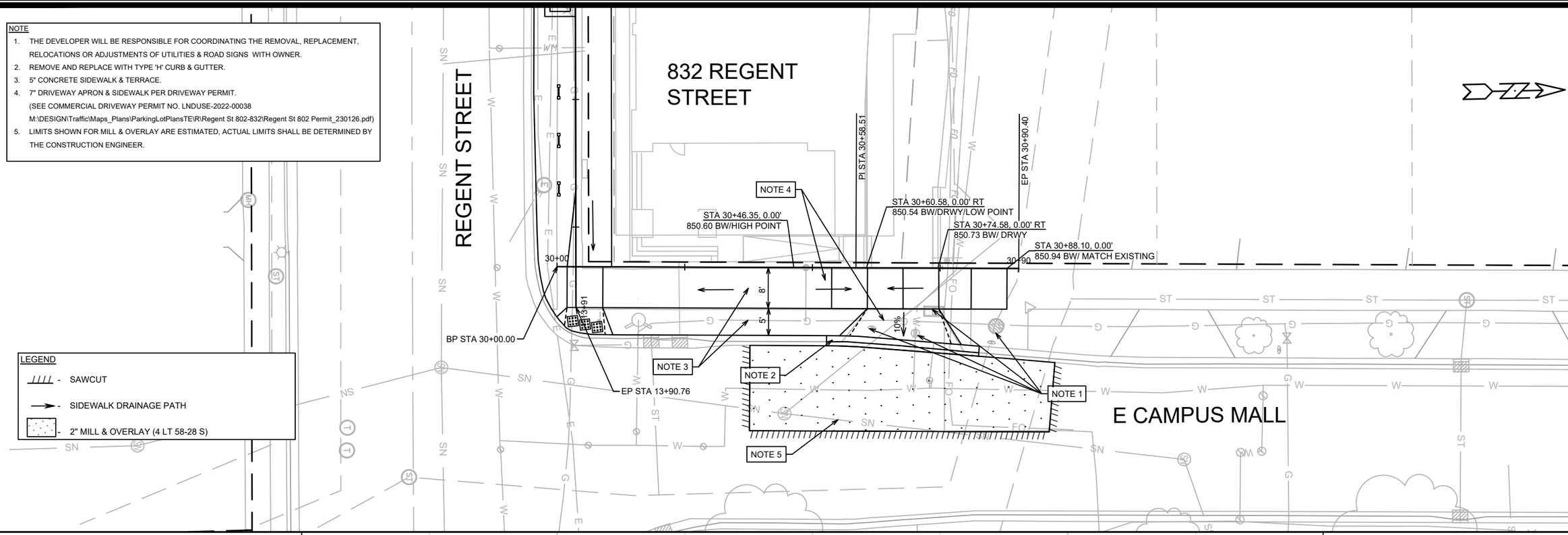

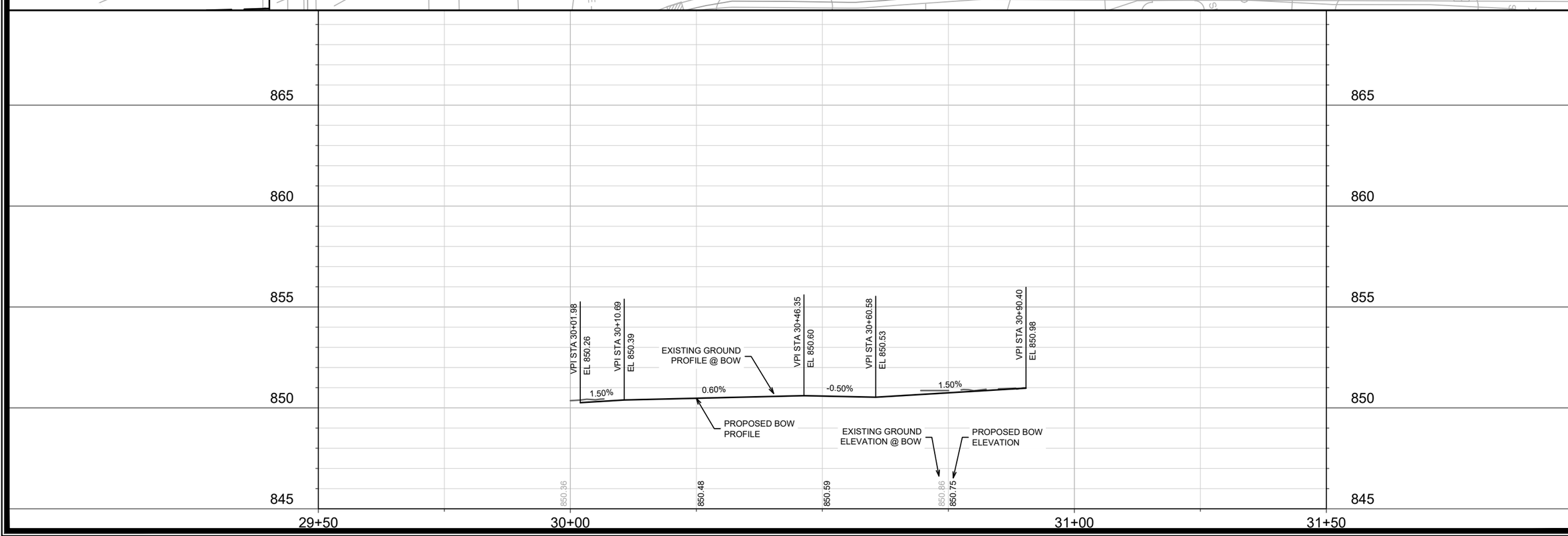

MARK	REVISION	DATE	BY
---	---	---	---
---	---	---	---
---	---	---	---
---	---	---	---

Designed By: FBEG Date: 4/6/2023 10:38 AM Scale: 1:20

14340

MADISON, WI

CONTRACT NO: 9212

PLAN & PROFILE - E CAMPUS MALL

832 REGENT STREET

M:\DESIGN\Projects\14340\CAD\Streets\14340EN-PnP.dwg

14340

P-3

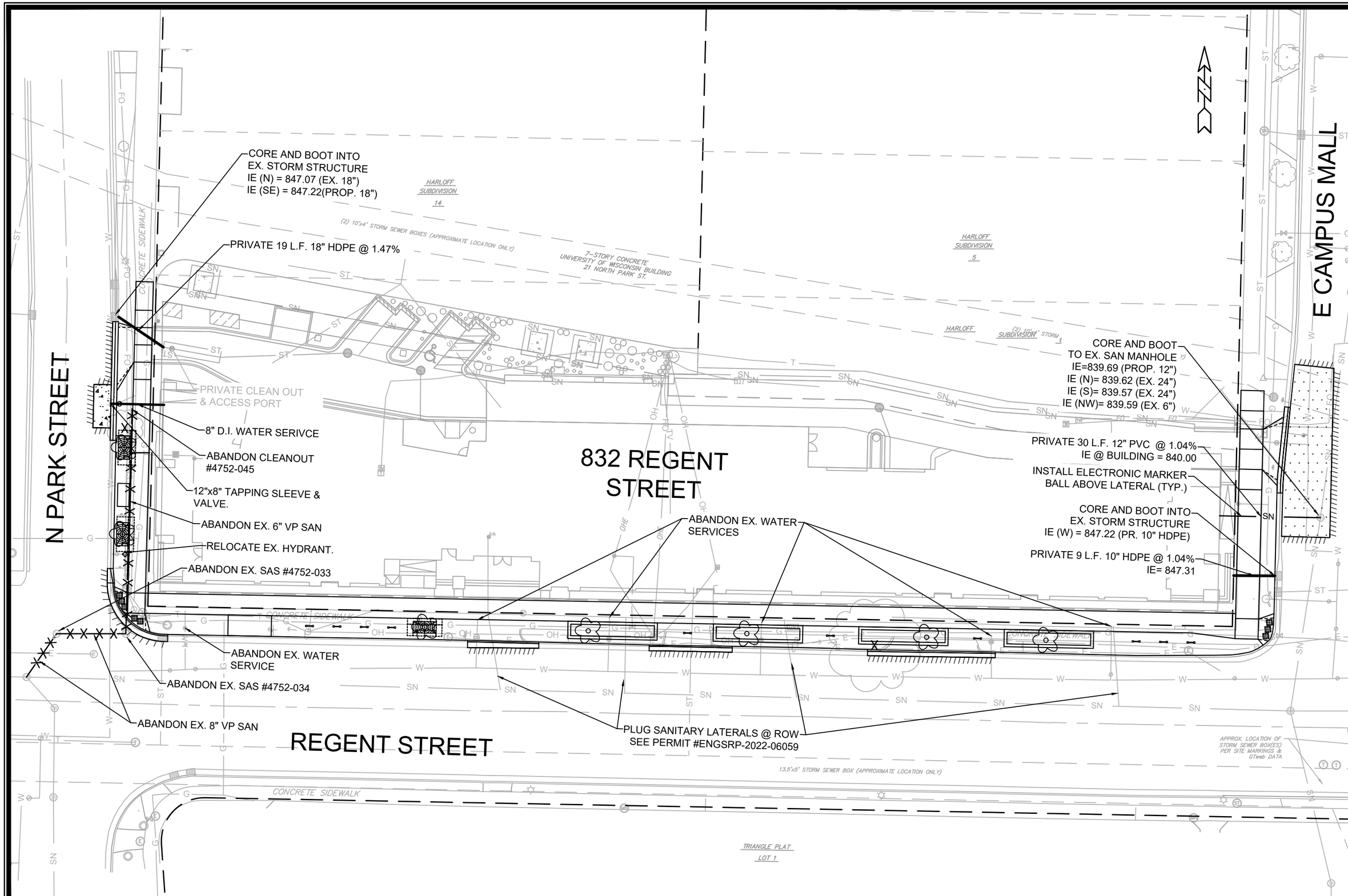

MARK	REVISION	DATE	BY
---	---	---	---
---	---	---	---
---	---	---	---
---	---	---	---

Designed By: IO | Date: 4/6/2023 10:15 AM | Scale: 1:30 | U-1

14340

MADISON, WI

CONTRACT NO: 9212

UTILITY PLAN

832 REGENT STREET

M:\DESIGN\Projects\14340\CAD\Sewers\14340SWR-PipeNetwork.dwg

CITY OF MADISON WISCONSIN

14340

U-1

Street Tree Plant List					
Code	**Quantity**	**Size**	**Root**	**Common Name**	**Botancial Name**
GA	1	2 1/2"	B&B	Autumn Gold Maidenhair Tree	Ginkgo biloba 'Autumn Gold'
GP	3	2 1/2"	B&B	Princeton Sentry Maidenhair Tree	Ginkgo biloba 'Princeton Sentry'
GD	2	2 1/2"	B&B	Street Keeper Honey Locust	Gleditsia triacanthos inermis 'Draves'
TM	1	2 1/2"	B&B	American Sentry Linden	Tilia americana 'McKSentry'

FORESTRY NOTES:

1. CONTRACTOR SHALL CONTACT CITY FORESTRY 608-266-4816 AT LEAST ONE WEEK PRIOR TO PLANTING TO SCHEDULE INSPECTING THE NURSERY STOCK AND REVIEW PLANTING SPECIFICATION WITH THE LANDSCAPER.
2. NO LATER THAN FIVE BUSINESS DAYS PRIOR TO FORMING CONCRETE AND CONSTRUCTING TREE GRATE SITES, THE CONTRACTOR SHALL CONTACT CITY FORESTRY AT (608) 266-4816 TO IDENTIFY AND LOCATE UNDERGROUND CONFLICTS (UTILITIES, VAULTS, CONDUIT) OR OTHER UNDERGROUND OBSTRUCTIONS AND DETERMINE GRATE LOCATIONS. THE CONTRACTOR WILL BE REQUIRED TO OBTAIN THE GRATE, MATCHING FRAME AND/OR TREE GUARD. TREE GRATE TYPE AND MATCHING FRAME: NEENAH 4X8 (R-8815-A). TREE GUARD NEENAH (R-8501-4818).

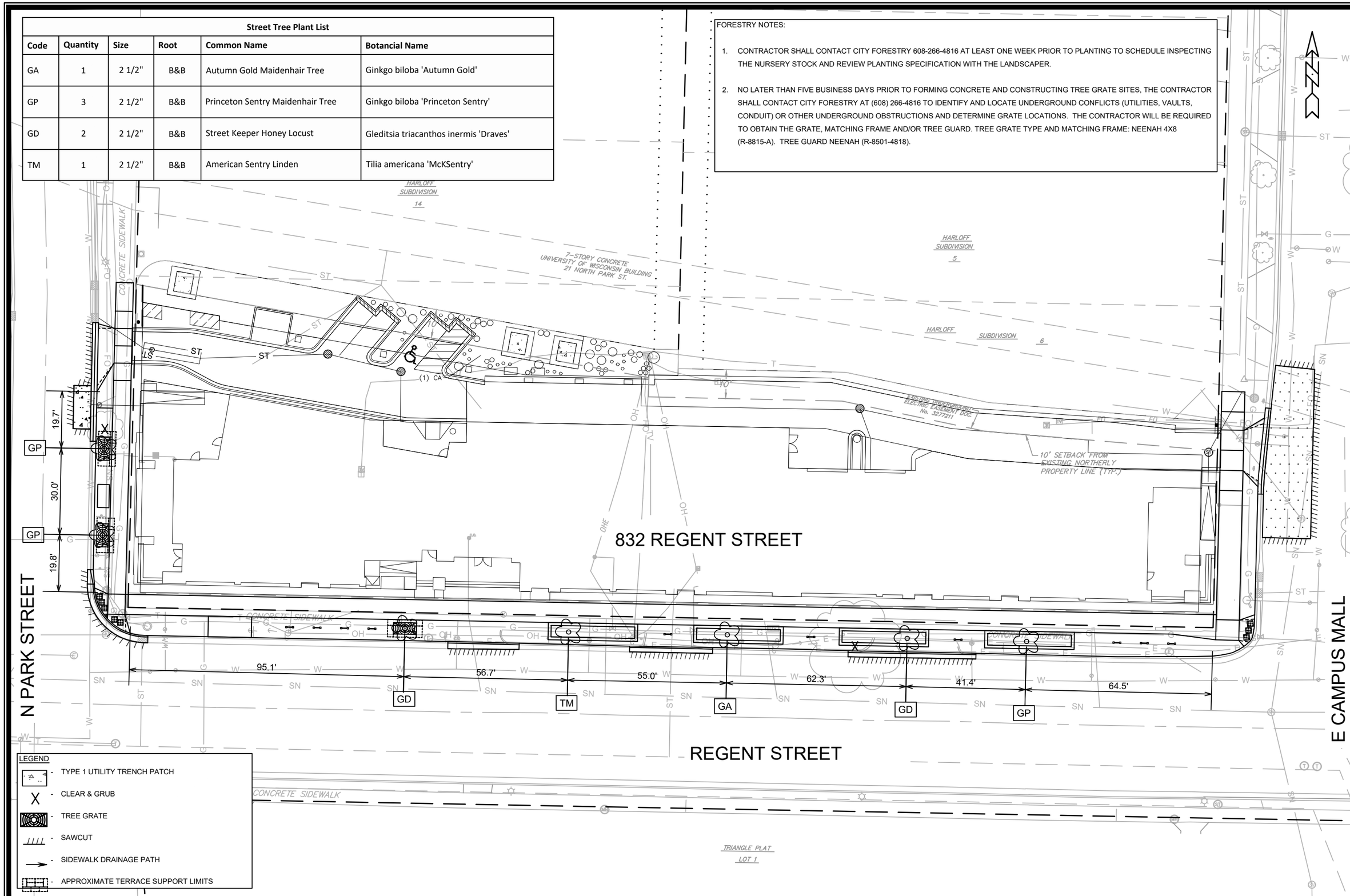

MARK	REVISION	DATE	BY
---	---	---	---

Designed By: IO | Date: 2/16/2023 12:57 PM | Scale: 1:30 | L-1

14340

MADISON, WI

CONTRACT NO: 9212

LANDSCAPE PLAN

832 REGENT STREET

M:\DESIGN\Projects\14340\CAD\Streets\14340EN-Landscape.dwg

14340

L-1

10+75.00

11+50.00

12+25.00

10+50.00

11+25.00

12+00.00

10+25.00

11+00.00

11+75.00

MARK	REVISION	DATE	BY
---	---	---	---
---	---	---	---
---	---	---	---
---	---	---	---

Designed By: FBEG Date: 2/16/2023 2:42 PM Scale: 1" = 20'

14340

X-1

14340

MADISON, WI

CONTRACT NO: 9212

CROSS SECTIONS - REGENT STREET

832 REGENT STREET

M:\DESIGN\Projects\14340\CAD\Streets\14340EN-Corridor.dwg

CITY OF MADISON WISCONSIN

14340

X-1

13+00.00

13+75.00

12+75.00

13+50.00

12+50.00

13+25.00

MARK	REVISION	DATE	BY
---	---	---	---
---	---	---	---
---	---	---	---
---	---	---	---

Designed By: FBEG Date: 2/16/2023 2:49 PM Scale: 1" = 20'

14340

X-2

14340

MADISON, WI

CONTRACT NO: 9212

CROSS SECTIONS - REGENT STREET

832 REGENT STREET

M:\DESIGN\Projects\14340\CAD\Streets\14340EN-Corridor.dwg

14340

X-2

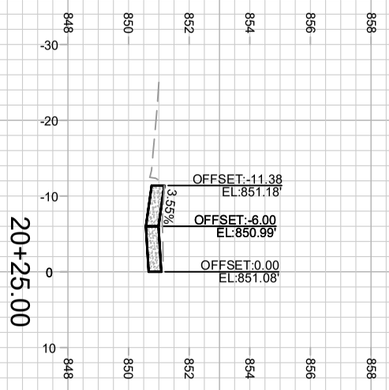

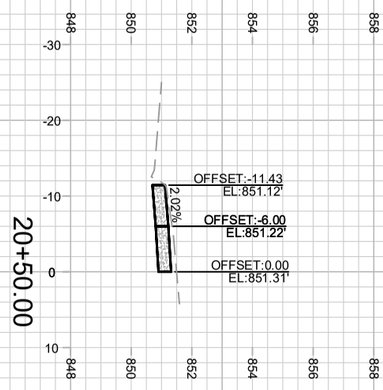

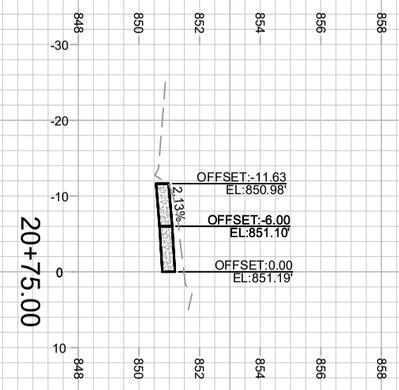

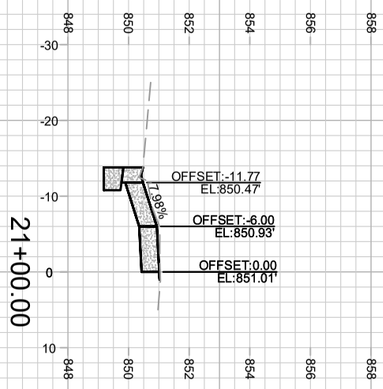

CROSS SECTIONS - N PARK STREET		14340	
832 REGENT STREET		MADISON, WI	
M:\DESIGN\Projects\14340\CAD\Streets\14340EN-Corridor.dwg	CONTRACT NO:	9212	

MARK	REVISION	DATE	BY
---	---	---	---
---	---	---	---
---	---	---	---
---	---	---	---

Designed By: IO	Date: 2/16/2023 2:45 PM	Scale: 1" = 20'
14340		X-3

X-3

14340

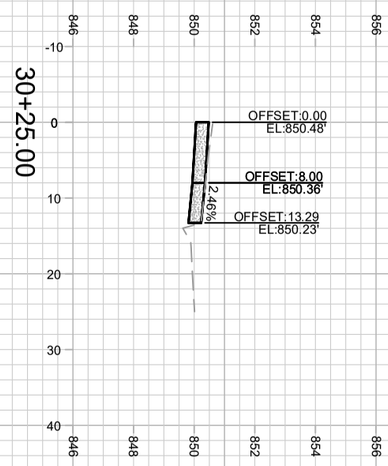

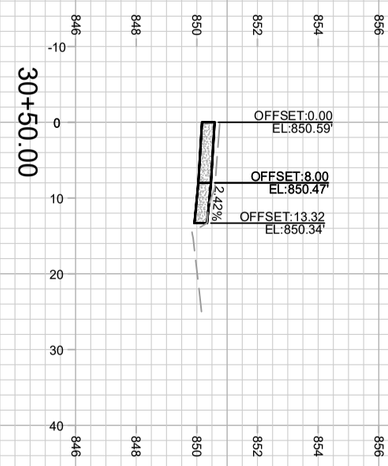

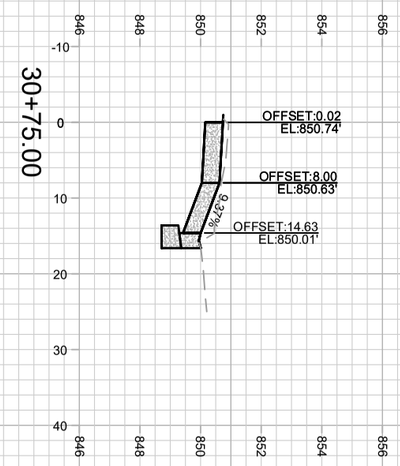

CROSS SECTIONS - E CAMPUS MALL		14340	
832 REGENT STREET		MADISON, WI	
M:\DESIGN\Projects\14340\CAD\Streets\14340EN-Corridor.dwg	CONTRACT NO:	9212	

MARK	REVISION	DATE	BY
---	---	---	---
---	---	---	---
---	---	---	---
---	---	---	---

Designed By: IO	Date: 2/16/2023 2:46 PM	Scale: 1" = 20'
14340		X-4

14340

X-4

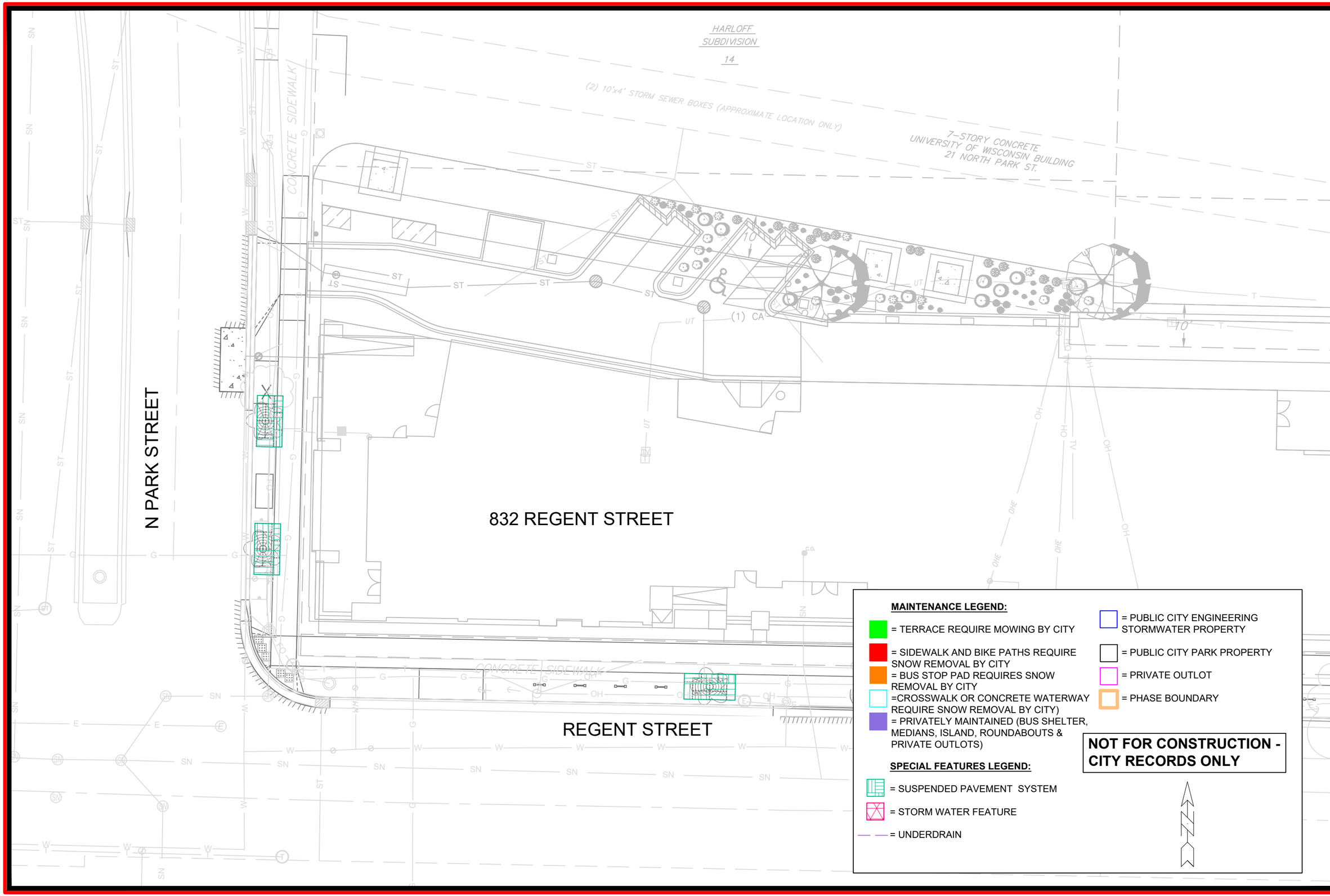

MARK	REVISION	DATE	BY
---	---	---	---
---	---	---	---
---	---	---	---
---	---	---	---

Designed By: IO | Date: 3/1/2023 11:19 AM | Scale: 1:20

14340 | MN-1

14340

MADISON, WI

CONTRACT NO: 9212

MAINTENANCE PLAN

832 REGENT STREET

M:\DESIGN\Projects\14340\CAD\Streets\14340EN-Maintenance.dwg

14340

MN-1