CITY OF MADISON

CITY ENGINEERING DIVISION
DEPARTMENT OF PUBLIC WORKS
PLAN OF PROPOSED IMPROVEMENT

Madison, Wisconsin

INDEX OF SHEETS

SHEET NO.	1	TITLE
SHEET NO.	D 1	STANDARD COMMENTS
SHEET NO.	D 2-D 4	TYPICAL SECTIONS
SHEET NO.	O 1	OVERVIEW PLAN
SHEET NO.	P 1-P 8	PLAN & PROFILES
SHEET NO.	U 1-U 8	UTILITIES PLAN & PROFILE
SHEET NO.	U 9	SANITARY SEWER SCHEDULE
SHEET NO.	U 10	STORM SEWER SCHEDULE
SHEET NO.	W 1-W 5	WATER PLAN & PROFILES
SHEET NO.	W 6	WATER ESTIMATE OF MATERIALS
SHEET NO.	W 7	WATER IMPACT PLAN
SHEET NO.	X 1- X 10	CROSS SECTIONS
SHEET NO.	MN 1	MAINTENANCE PLAN

ACACIA RIDGE
PHASE 8

CITY PROJECT NO. 14342
CONTRACT NO. 9215

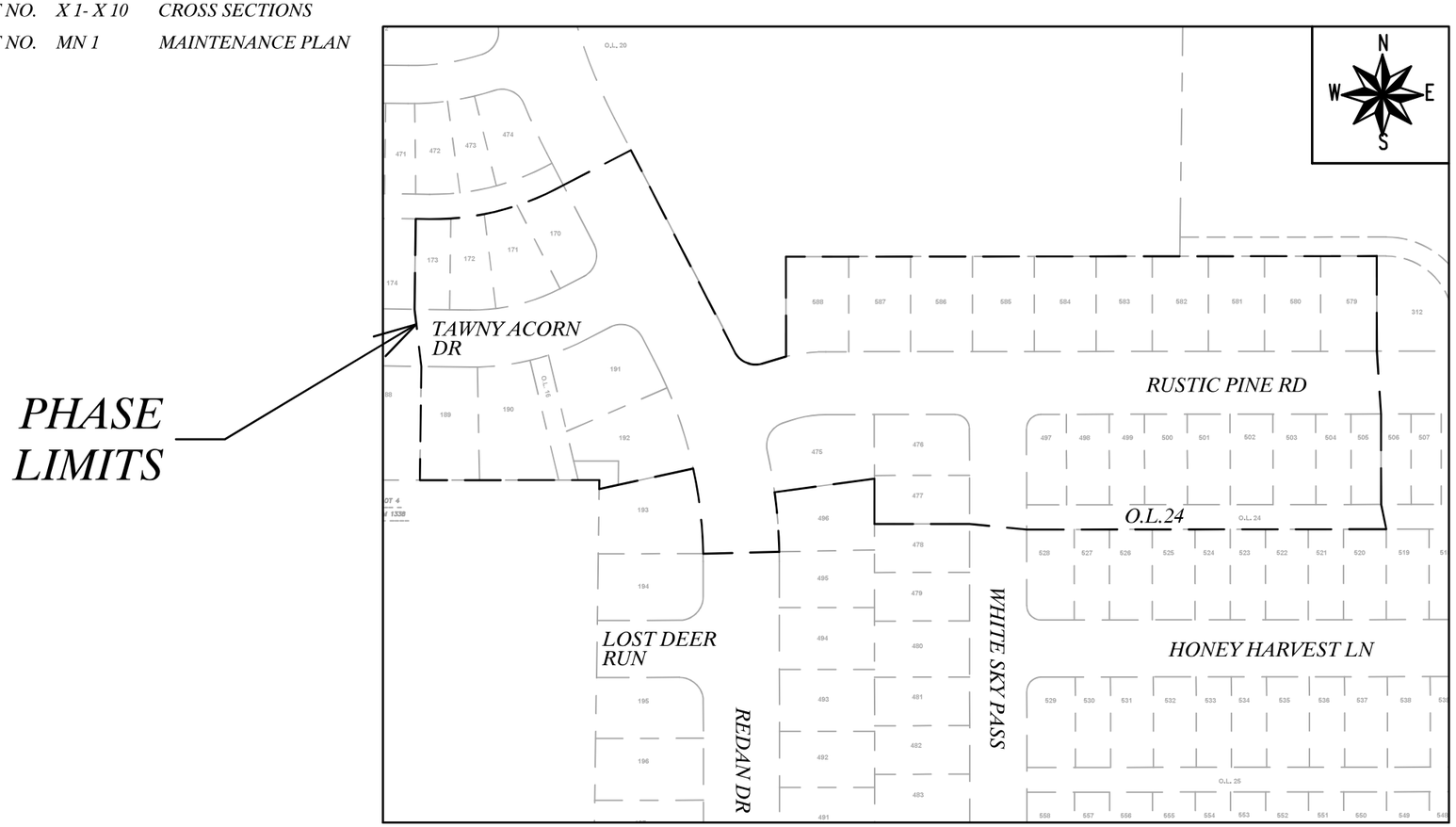

PUBLIC IMPROVEMENT PROJECT APPROVED

APPROVED DATE: DECEMBER 6,2022

BY THE COMMON COUNCIL OF MADISON, WISCONSIN

PUBLIC IMPROVEMENT DESIGN APPROVED BY:

Apr 27, 2023

City Engineer — Date

STREET DESIGNED BY:

WISCONSIN FADI B EL MUSA GONZALEZ E-47872 MADISON WI PROFESSIONAL ENGINEER

Apr 27, 2023

GEOMETRICS DESIGNED BY:

WISCONSIN SEAN D MALLOY E-48326 MADISON WI PROFESSIONAL ENGINEER

Apr 27, 2023

STORM SEWER DESIGNED BY:

WISCONSIN JANET SCHMIDT E-34681 MADISON WI PROFESSIONAL ENGINEER

Apr 27, 2023

WATER DESIGNED BY:

WISCONSIN ADAM R. WIEDERHOEFT E-41559 MADISON WI PROFESSIONAL ENGINEER

Apr 27, 2023

SANITARY SEWER DESIGNED BY:

WISCONSIN MARK D. MODER E-33979 MADISON WI PROFESSIONAL ENGINEER

Apr 27, 2023

THE LOCATION AND INFORMATION FOR PROPOSED NEW TREES, IN THE PUBLIC RIGHT OF WAY OR ON PUBLIC LANDS ARE APPROXIMATE AND ARE SHOWN FOR REFERENCE ONLY. THE LOCATIONS, SPECIFICATIONS AND PLANTING METHODS OF ALL PROPOSED NEW OR REPLACEMENT TREES IN THE PUBLIC RIGHT OF WAY OR ON PUBLIC LANDS SHALL BE APPROVED BY THE CITY FORESTER PRIOR TO INSTALLATION.

NO TREES IN THE RIGHT OF WAY OR ON PUBLIC LANDS SHALL BE TRIMMED, PRUNED, REMOVED OR ADVERSELY AFFECTED IN ANY WAY UNTIL THE DEVELOPER HAS RECEIVED WRITTEN PERMISSION FROM THE CITY ENGINEER OR CITY FORESTER. SAID WRITTEN PERMISSION SHALL INCLUDE LANGUAGE INDICATING THAT SECTION 10.101 OF THE MADISON GENERAL ORDINANCES AND ADMINISTRATIVE PROCEDURE MEMORANDUM NO. 6-2, REFERRING TO NOTIFICATION OF PROPERTY OCCUPANTS AND/OR OWNERS, HAS BEEN COMPLIED WITH.

DEVELOPER MUST SUBMIT A TRAFFIC CONTROL PLAN TO CITY TRAFFIC ENGINEERING AT LEAST 14 DAYS PRIOR TO THE START OF WORK. WORK SHALL NOT PROCEED UNTIL AN APPROVED TRAFFIC CONTROL PLAN IS IN PLACE.

CONTACT THE PROJECT ENGINEER AND DESIGNER, FADI EL MUSA GONZALEZ, AT FELMUSAGONZALEZ@CITYOFMADISON.COM FOR CAD FILES AND ALIGNMENT DATA PRIOR TO STAKING.

CONVENTIONAL SIGNS
FIELD VERIFY ALL UTILITY LOCATIONS

GAS	G
STORM SEWER	ST
SANITARY SEWER	SAN
WATER	W
BURIED ELECTRIC	E
OVERHEAD ELECTRIC	OH
POWER POLE	
ADA COMPLIANT RAMP W/ DETECTABLE WARNING FIELD	
COMBUSTIBLE FLUIDS	CAUTION

ALL PAVEMENT IN THE RUSTIC PINE ROAD, WHITE SKY PASS, AND TAWNY ACORN DRIVE RIGHTS-OF-WAY SHALL BE TYPE A PAVEMENT PER STANDARD DETAIL DRAWING 4.02.

ALL PAVEMENT IN THE REDAN DRIVE RIGHT-OF-WAY SHALL BE TYPE B PAVEMENT PER STANDARD DETAIL DRAWING 4.02.

UNDERDRAINS SHALL BE INSTALLED PER STANDARD DETAIL DRAWING 4.05 FOR 75' ON EACH SIDE OF THE LOW POINT, OR TO THE NEAREST CURB HIGH POINT. ALL UNDERDRAIN SHALL BE WRAPPED.

ALL GUTTERS SHALL DRAIN WITH A MINIMUM GRADE OF 0.5% TOWARD STORM SEWER INLETS.

ALL DITCHES SHALL DRAIN WITH A MINIMUM GRADE OF 0.5%

THE CROSS SLOPE OF SIDEWALKS AND BARRIER FREE SIDEWALK CURB RAMPS SHALL TYPICALLY BE 1.5%. THE LONGITUDINAL GRADE OF BARRIER FREE SIDEWALK CURB RAMPS SHALL NOT EXCEED 8.33%. ALL SIDEWALK RAMPS SHALL BE CONSTRUCTED ACCORDING TO S.D.D. 3.04. AT ALL OTHER LOCATIONS THE LONGITUDINAL GRADE OF SIDEWALKS SHALL NOT EXCEED 5.0 % OR THE ADJACENT STREET GRADE WHICHEVER IS GREATER NOR BE LESS THAN 0.5% AND SHALL DRAIN TOWARD STORM SEWER INLETS. SIDE SLOPES WITHIN TEN FEET OF A PUBLIC SIDEWALK SHALL NOT EXCEED 4:1. ALL SIDEWALK AND SIDEWALK RAMP ELEVATIONS AND GRADES SHALL BE FIELD VERIFIED AND SET TO COMPLY WITH THE CITY OF MADISON STANDARD SPECIFICATIONS AND THE A.D.A. GUIDELINES.

OBTAIN A PRINT OUT OF THE ALIGNMENTS FROM THE CITY PROJECT ENGINEER PRIOR TO STAKING THIS PROJECT. THE CITY PROJECT ENGINEER IS FADI EL MUSA, EMAIL: FELMUSAGONZALEZ@CITYOFMADISON.COM

CURB STATION AND OFFSETS SHALL BE TO THE EDGE OF PAVEMENT UNLESS OTHERWISE INDICATED. CURB ELEVATIONS SHALL BE TO THE EDGE OF PAVEMENT UNLESS OTHERWISE INDICATED.

POWER POLES AND OTHER OBSTRUCTIONS SHALL BE MOVED TO PROVIDE 2 FEET MINIMUM OF CLEAR DISTANCE FROM ANY FACE OF CURB OR EDGE OF SIDEWALK UNLESS OTHERWISE INDICATED ON THE PLANS.

ANY INFORMATION SHOWN ON THIS PLAN, WHICH IS NOT PART OF THIS RIGHT-OF-WAY PROJECT, IS PRELIMINARY AND NOT FOR CONSTRUCTION.

THERE MAY BE EXISTING UTILITIES OR OTHER FEATURES WHICH ARE EITHER NOT SHOWN OR SHOWN INCORRECTLY ON THIS PLAN. IT IS THE RESPONSIBILITY OF THE DEVELOPER TO LOCATE AND IDENTIFY ALL UTILITIES AND TOPOGRAPHY WHICH MAY AFFECT THE CONSTRUCTION OF THESE IMPROVEMENTS.

ALL PERMANENT SIGNING AND POSTING WILL BE DETERMINED AND PROVIDED BY THE TRAFFIC ENGINEERING DIVISION, FOLLOWING CONSTRUCTION OF THESE IMPROVEMENTS.

THE DEVELOPER SHALL PROVIDE, INSTALL AND MAINTAIN ALL STREET END BARRICADES, SIGNING AND TRAFFIC CONTROL, AS REQUIRED BY THE CITY TRAFFIC ENGINEER.

PAVEMENT SAWCUTS SHALL BE AS DIRECTED BY THE CITY CONSTRUCTION ENGINEER. SAWCUTS SHOWN ON THE PLAN ARE APPROXIMATE.

CURB ON CUL DE SACS SHALL BE INSTALLED ACCORDING TO S.D.D 3.05.

ALL WORK IN THE RIGHT OF WAY AND PUBLIC EASEMENTS SHALL BE IN ACCORDANCE WITH THE CITY OF MADISON STANDARD SPECIFICATIONS FOR PUBLIC WORKS CONSTRUCTION LATEST EDITION.

ALL PROPOSED IMPROVEMENTS IN THE RIGHT-OF-WAY ARE BASED ON SURVEY DATA PROVIDED BY THE DEVELOPER OR ITS CONSULTANT. IN THE CASE THAT THE PROPOSED IMPROVEMENTS CAN NOT BE INSTALLED PER THESE PLANS OR THE CITY OF MADISON STANDARD SPECIFICATION FOR PUBLIC WORKS CONSTRUCTION, LATEST EDITION, THE DEVELOPER SHALL BE RESPONSIBLE FOR THE COST OF EXTRA WORK DUE TO INACCURACIES OF THE SURVEY.

ALL UTILITY VERIFICATIONS AND ACCURACY OF THE DRAWINGS ARE THE RESPONSIBILITY OF THE DEVELOPER. ANY CONFLICTS THAT ARISE FROM MISSING OR ERRONEOUS INFORMATION WILL BE AT THE EXPENSE OF THE DEVELOPER. NO PRECAST STRUCTURES WILL BE APPROVED FOR STORM OR SANITARY SEWER UNTIL ALL POTENTIAL UTILITY CONFLICTS ARE RESOLVED.

MARK	REVISION	DATE	BY
---	---	---	---
---	---	---	---
---	---	---	---
---	---	---	---

Designed By: IO
Date: 4/17/2023 8:28 AM
Scale:
14342
D-1

14342

MADISON, WI

CONTRACT NO: 9215

STANDARD NOTES

ACACIA RIDGE - PHASE 8

M:\DESIGN\Projects\14342\CAD\Streets\14342EN-Details.dwg

CITY OF MADISON WISCONSIN

14342

D-1

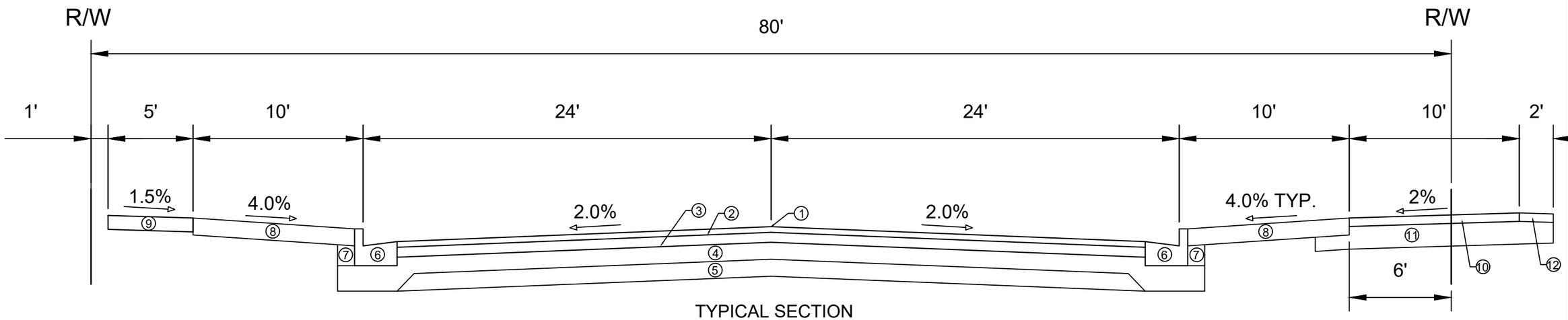

TYPICAL SECTION
REDAN DRIVE
STA 90+84 TO STA 91+65

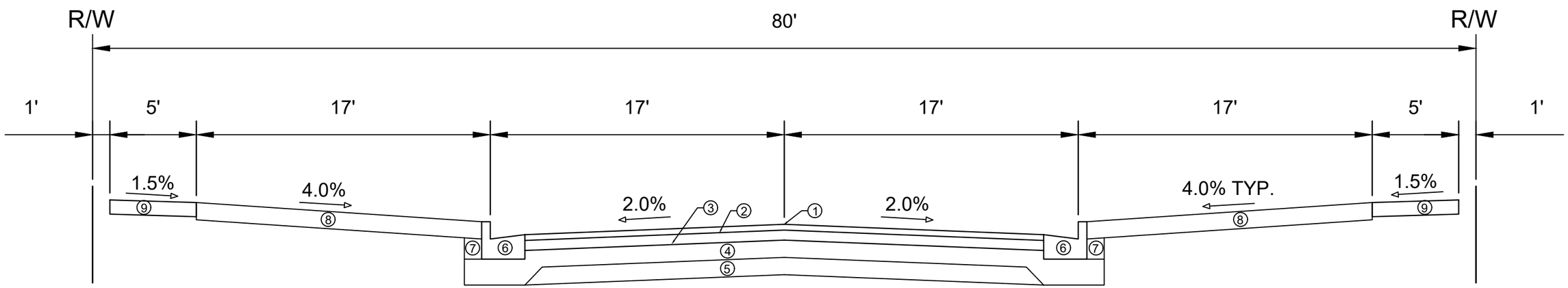

TYPICAL SECTION
REDAN DRIVE
STA 88+41 TO STA 90+84

1. POINT REFERRED TO ON PROFILE
2. 2.0" H.M.A. PAVEMENT- TYPE 4 LT 58-28 S
3. 2.5" H.M.A. PAVEMENT- TYPE 3 LT 58-28 S
4. 6" CRUSHED AGGREGATE BASE COURSE GRADATION 2
5. 6" CRUSHED AGGREGATE BASE COURSE GRADATION 1
6. CONCRETE CURB AND GUTTER TYPE 'A'.
7. FILL
8. 6" TOPSOIL, SEED AND MATTING
9. 5" CONCRETE SIDEWALK
10. 3" H.M.A. PAVEMENT- TYPE 4 LT 58-28 S
11. 8" CRUSHED AGGREGATE BASE COURSE GRADATION 2
12. 3" TOPSOIL, SEED, AND MATTING

MARK	REVISION	DATE	BY
---	---	---	---
---	---	---	---
---	---	---	---
---	---	---	---

Designed By: IO
Date: 4/17/2023 8:28 AM
Scale:
14342
D-2

14342
MADISON, WI
CONTRACT NO: 9215

TYPICAL SECTIONS
ACACIA RIDGE - PHASE 8
M:\DESIGN\Projects\14342\CAD\Streets\14342EN-Details.dwg

CITY OF MADISON WISCONSIN

14342
D-2

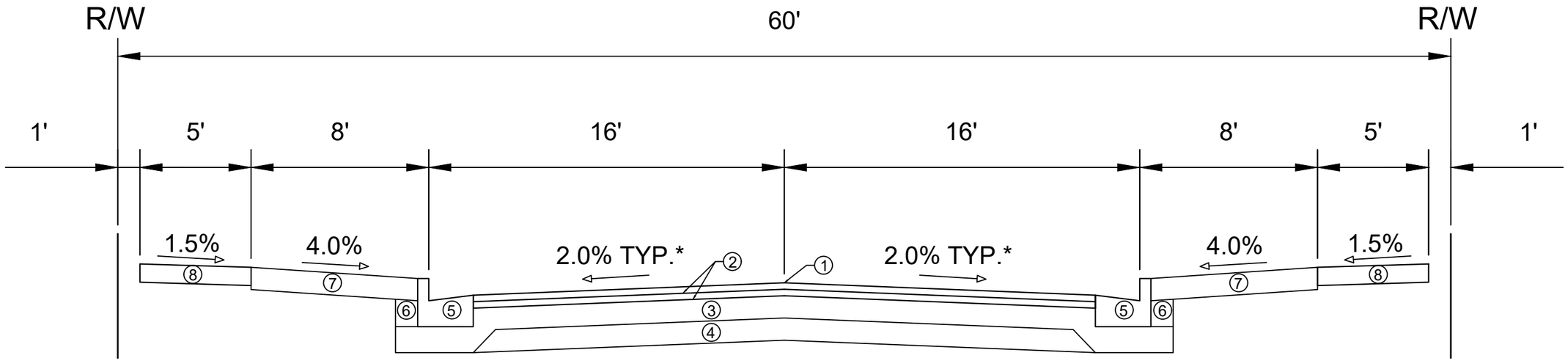

TYPICAL SECTION
WHITE SKY PASS
TAWNY ACORN DRIVE

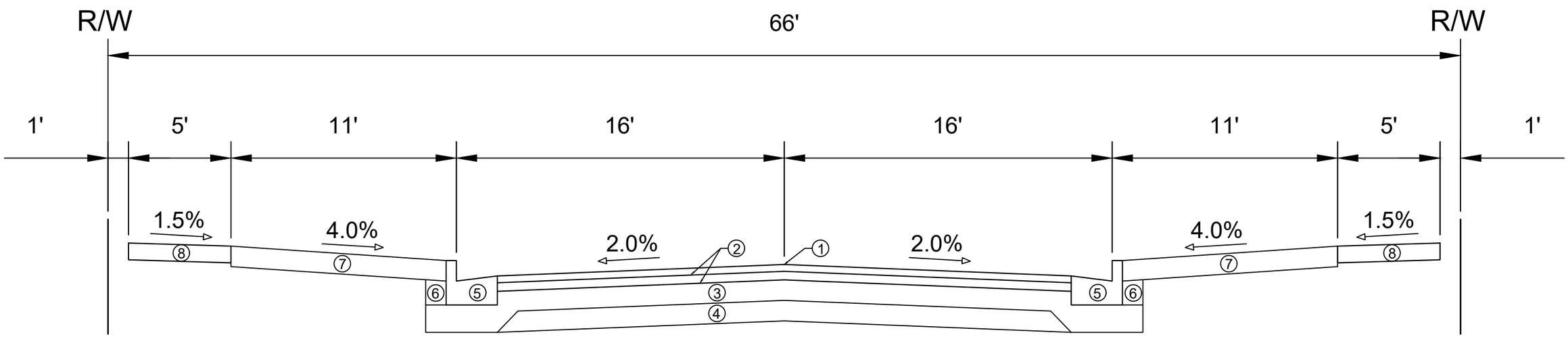

TYPICAL SECTION
RUSTIC PINE ROAD

SPECIAL NOTES:

*SEE P & X SHEETS FOR CROSS SLOPES

1. POINT REFERRED TO ON PROFILE
2. 1.75" H.M.A. PAVEMENT- TYPE 4 LT 58-28 S
3. 6" CRUSHED AGGREGATE BASE COURSE GRADATION 2
4. 6" CRUSHED AGGREGATE BASE COURSE GRADATION 1
5. CONCRETE CURB AND GUTTER TYPE 'A'.
6. FILL
7. 6" TOPSOIL, SEED AND MATTING
8. 5" CONCRETE SIDEWALK

MARK	REVISION	DATE	BY
---	---	---	---
---	---	---	---
---	---	---	---
---	---	---	---

Designed By: IO
Date: 4/17/2023 8:28 AM
Scale:
14342
D-3

14342
MADISON, WI
CONTRACT NO: 9215

TYPICAL SECTIONS
ACACIA RIDGE - PHASE 8
M:\DESIGN\Projects\14342\CAD\Streets\14342EN-Details.dwg

14342
D-3

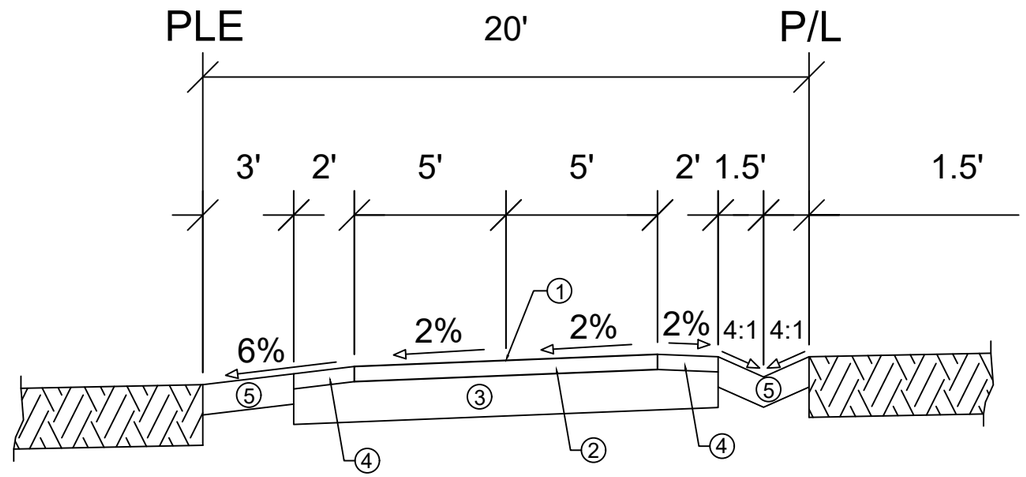

TYPICAL SECTION
SHARED USE PATH
FROM STA 63+50 TO STA 65+52

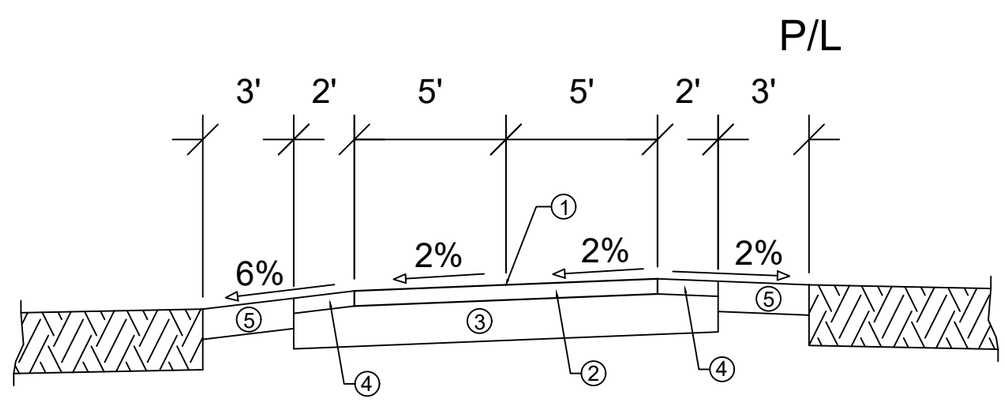

TYPICAL SECTION
SHARED USE PATH
FROM STA 58+30 TO STA 63+50

1. POINT REFERRED TO ON PROFILE
2. 3" H.M.A. PAVEMENT- TYPE 4 LT 58-28 S
3. 8" CRUSHED AGGREGATE BASE COURSE GRADATION 2
4. 3" TOPSOIL, SEED, AND MATTING
5. 6" TOPSOIL, SEED AND MATTING

MARK	REVISION	DATE	BY
---	---	---	---
---	---	---	---
---	---	---	---
---	---	---	---

Designed By: IO
Date: 4/17/2023 8:28 AM
Scale:
14342
D-4

14342
MADISON, WI
CONTRACT NO: 9215

TYPICAL SECTIONS
ACACIA RIDGE - PHASE 8
M:\DESIGN\Projects\14342\CAD\Streets\14342EN-Details.dwg

14342
D-4

CLEAR RISE BLVD

REDAN DR

TAWNY ACORN DR

RUSTIC PINE RD

WHITE SKY PASS

LOST DEER RUN

HONEY HARVEST LN

O.L.24

O.L.25

DIT

LOT 4
CSM 1338

LEGEND

SURFACE PAVING BY CITY

SURFACE PAVING BY DEVELOPER UNDER CONTRACT NO. 9215

MARK	REVISION	DATE	BY
---	---	---	---
---	---	---	---
---	---	---	---
---	---	---	---

Designed By: IO
Date: 4/17/2023 8:49 AM
Scale: ########

14342

14342

MADISON, WI

CONTRACT NO: 9215

OVERVIEW PLAN

ACACIA RIDGE - PHASE 8

M:\DESIGN\Projects\14342\CAD\Streets\14342EN-OverviewPlan.dwg

14342

O-1

O-1

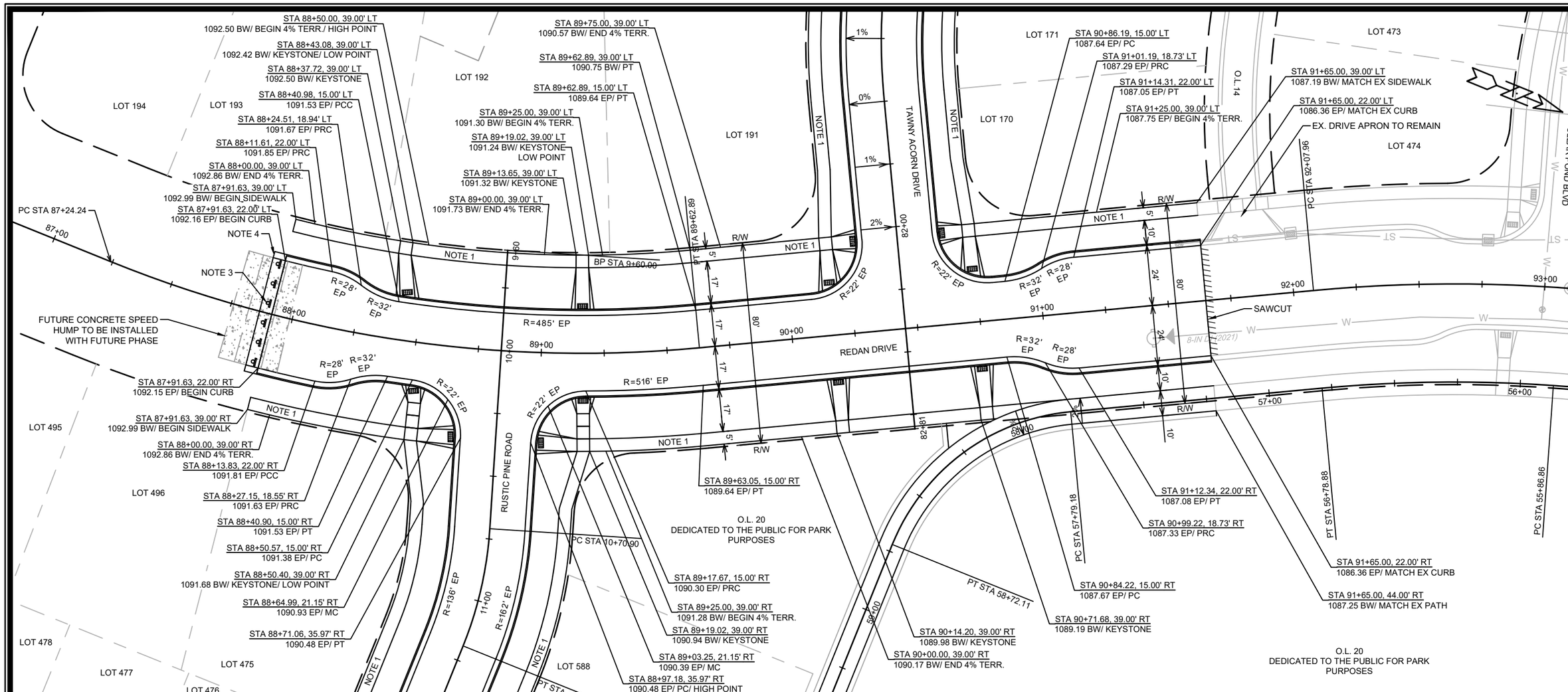

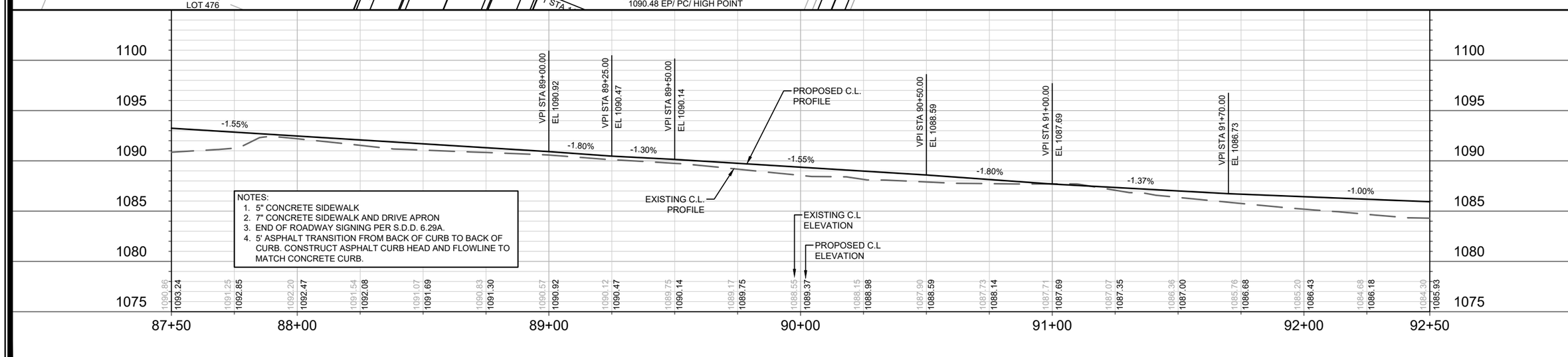

NOTES:
1. 5" CONCRETE SIDEWALK
2. 7" CONCRETE SIDEWALK AND DRIVE APRON
3. END OF ROADWAY SIGNING PER S.D.D. 6.29A.
4. 5' ASPHALT TRANSITION FROM BACK OF CURB TO BACK OF CURB. CONSTRUCT ASPHALT CURB HEAD AND FLOWLINE TO MATCH CONCRETE CURB.

MARK	REVISION	DATE	BY
---	---	---	---

Designed By: IO | Date: 4/17/2023 2:13 PM | Scale: ########

14342

MADISON, WI

9215

CONTRACT NO:

PLAN & PROFILE - REDAN DRIVE

ACACIA RIDGE - PHASE 8

M:\DESIGN\Projects\14342\CAD\Streets\14342EN-PnP.dwg

14342

P-1

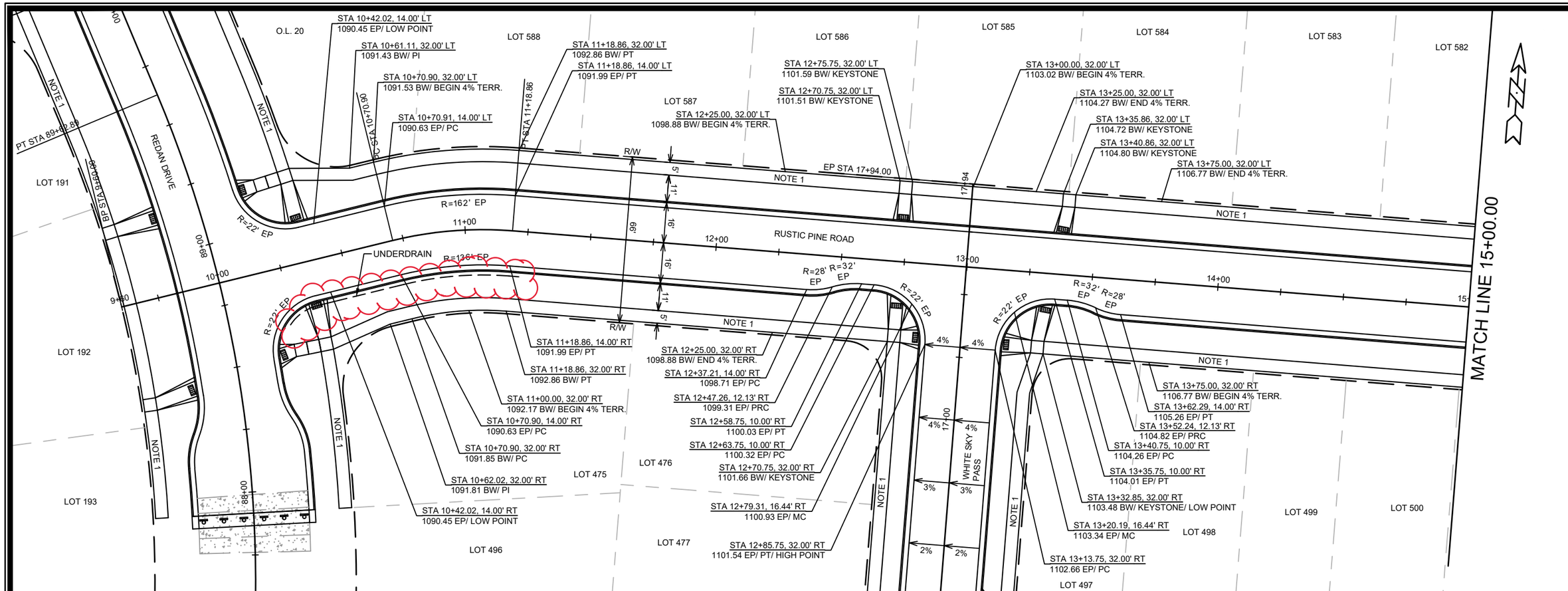

NOTES:
1. 5" CONCRETE SIDEWALK
2. 7" CONCRETE SIDEWALK AND DRIVE APRON
3. END OF ROADWAY SIGNING PER S.D.D. 6.29A.
4. 5' ASPHALT TRANSITION FROM BACK OF CURB TO BACK OF CURB. CONSTRUCT ASPHALT CURB HEAD AND FLOWLINE TO MATCH CONCRETE CURB.

REVISED 5/18/2023 - F.B.E.G.
1. ADDED UNDERDRAIN AT THE SOUTHEAST CORNER OF REDAN DR AND RUSTIC PINE RD

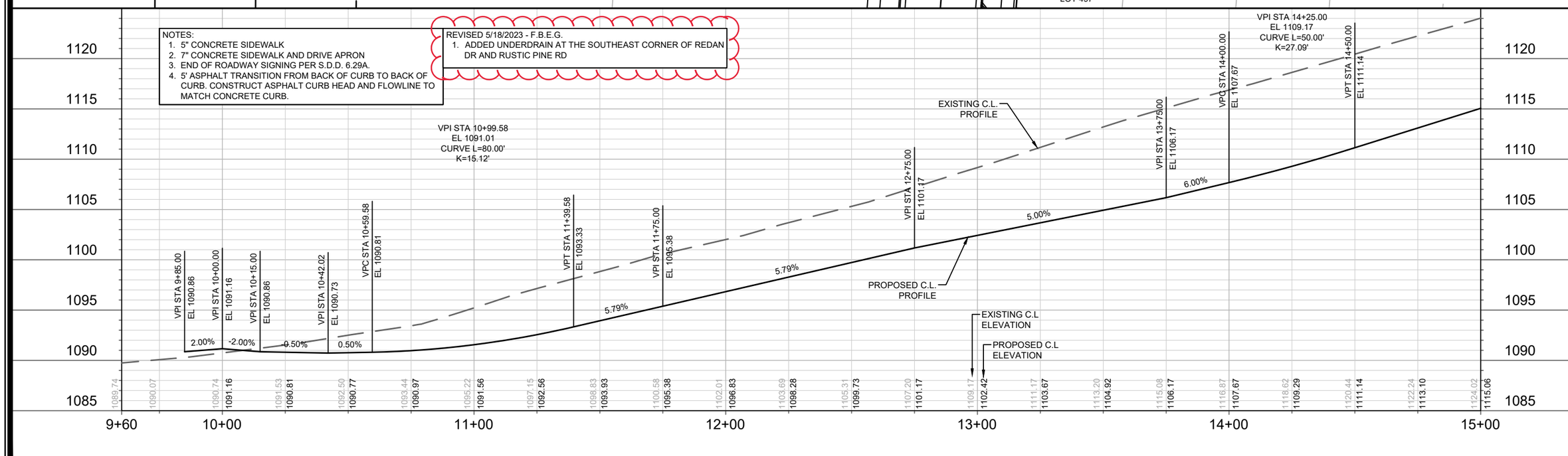

MARK	REVISION	DATE	BY
---	---	---	---
---	---	---	---
---	---	---	---
---	---	---	---

Designed By: IO | Date: 5/18/2023 4:33 PM | Scale: ########

14342

P-2

14342

MADISON, WI

CONTRACT NO: 9215

PLAN & PROFILE - RUSTIC PINE ROAD

ACACIA RIDGE - PHASE 8

M:\DESIGN\Projects\14342\CAD\Streets\14342EN-PnP.dwg

CITY OF MADISON WISCONSIN

14342

P-2

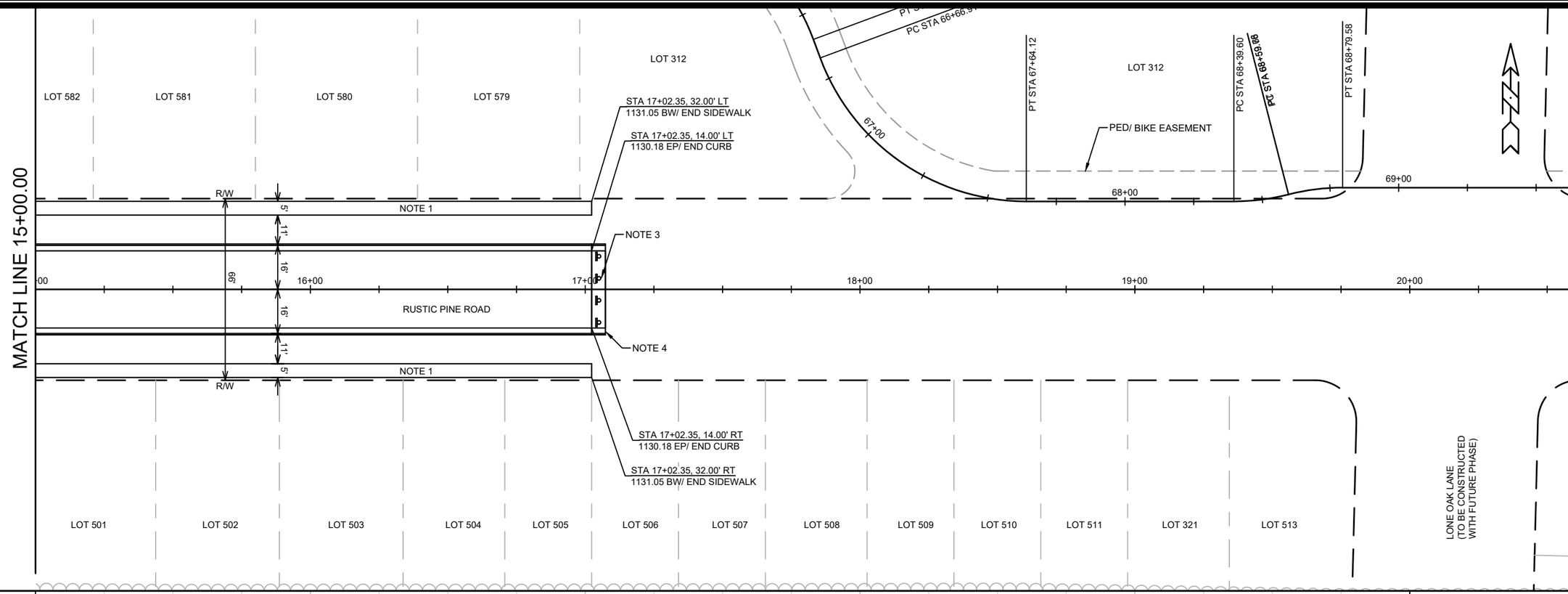

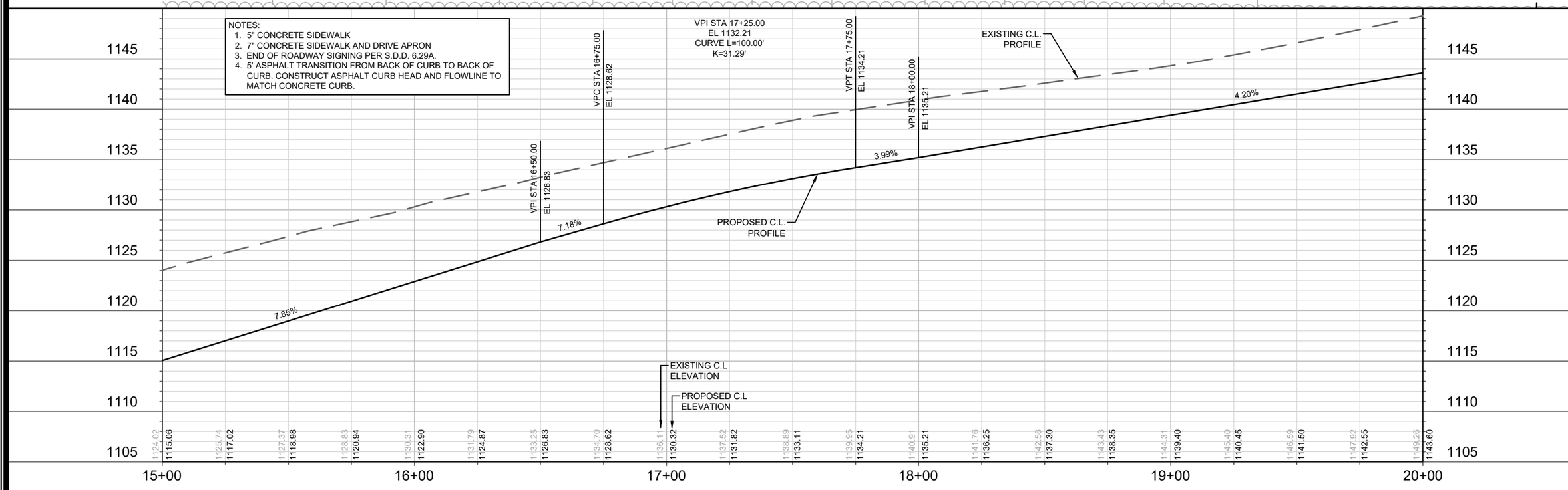

MARK	REVISION	DATE	BY
---	---	---	---
---	---	---	---
---	---	---	---
---	---	---	---
---	---	---	---

Designed By: IO | Date: 4/17/2023 2:13 PM | Scale: ########

14342

MADISON, WI

CONTRACT NO: 9215

PLAN & PROFILE - RUSTIC PINE ROAD

ACACIA RIDGE - PHASE 8

M:\DESIGN\Projects\14342\CAD\Streets\14342EN-PnP.dwg

14342

P-3

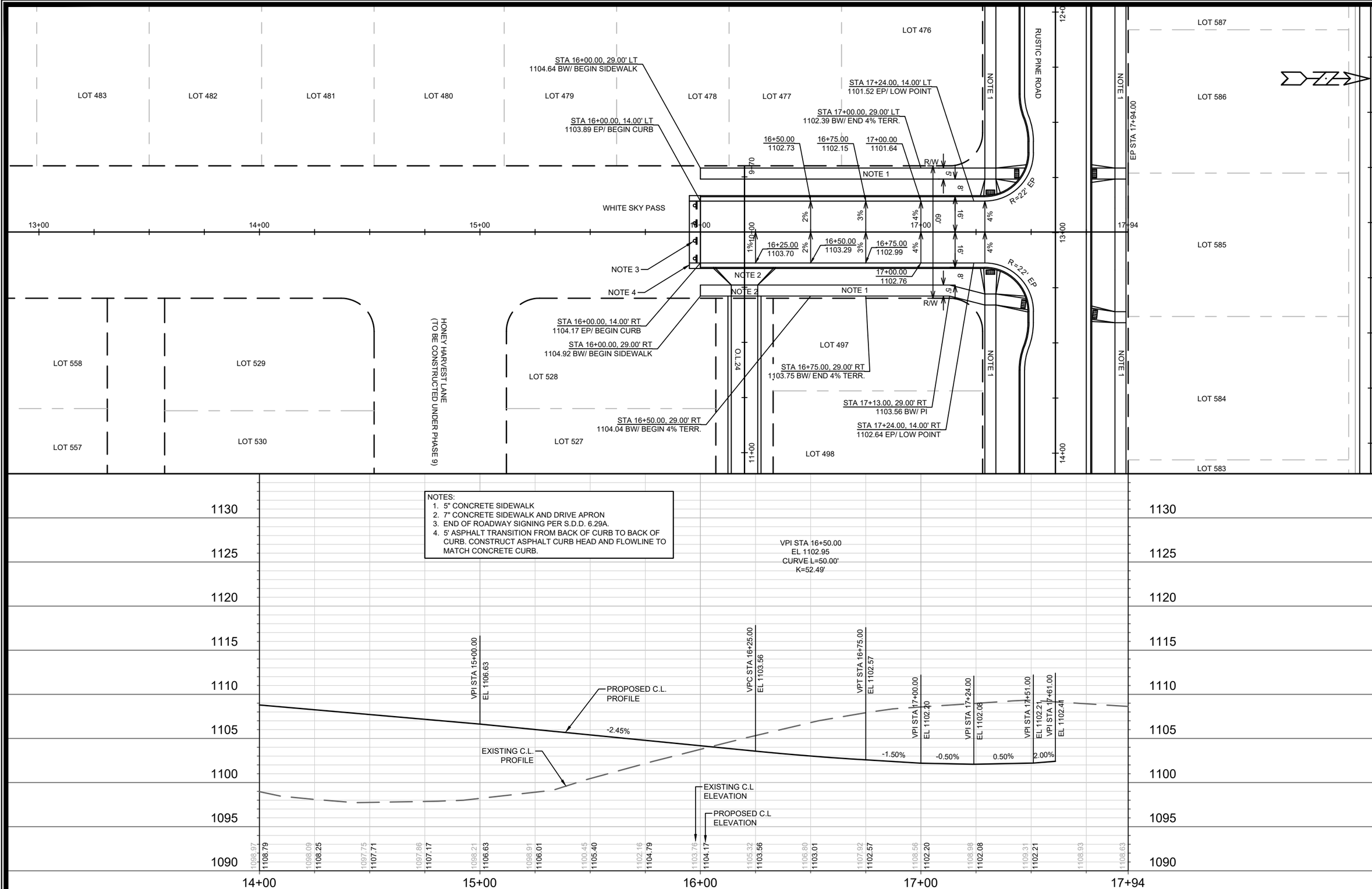

MARK	REVISION	DATE	BY
---	---	---	---
---	---	---	---
---	---	---	---
---	---	---	---
---	---	---	---

Designed By: IO | Date: 4/17/2023 2:13 PM | Scale: ########

14342

MADISON, WI

CONTRACT NO: 9215

PLAN & PROFILE - WHITE SKY PASS

ACACIA RIDGE - PHASE 8

M:\DESIGN\Projects\14342\CAD\Streets\14342EN-PnP.dwg

14342

P-4

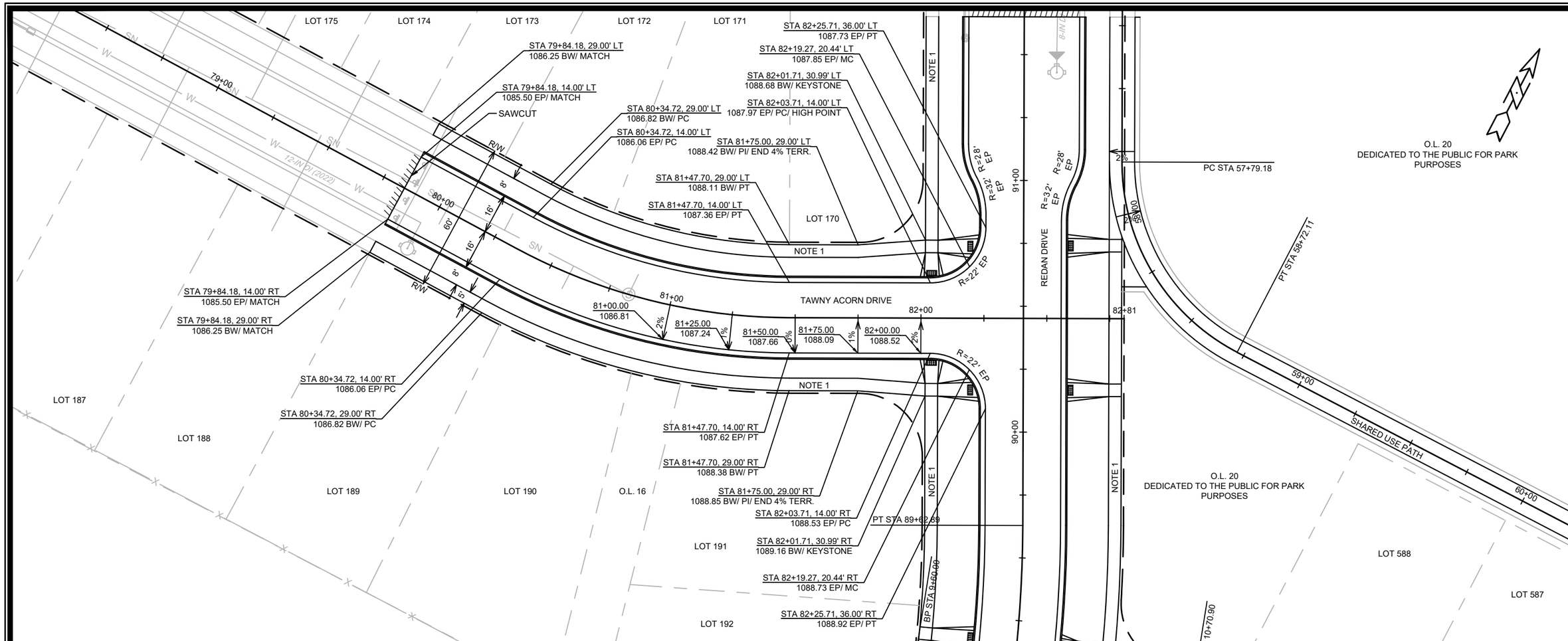

NOTES:
1. 5" CONCRETE SIDEWALK
2. 7" CONCRETE SIDEWALK AND DRIVE APRON
3. END OF ROADWAY SIGNING PER S.D.D. 6.29A.
4. 5' ASPHALT TRANSITION FROM BACK OF CURB TO BACK OF CURB. CONSTRUCT ASPHALT CURB HEAD AND FLOWLINE TO MATCH CONCRETE CURB.

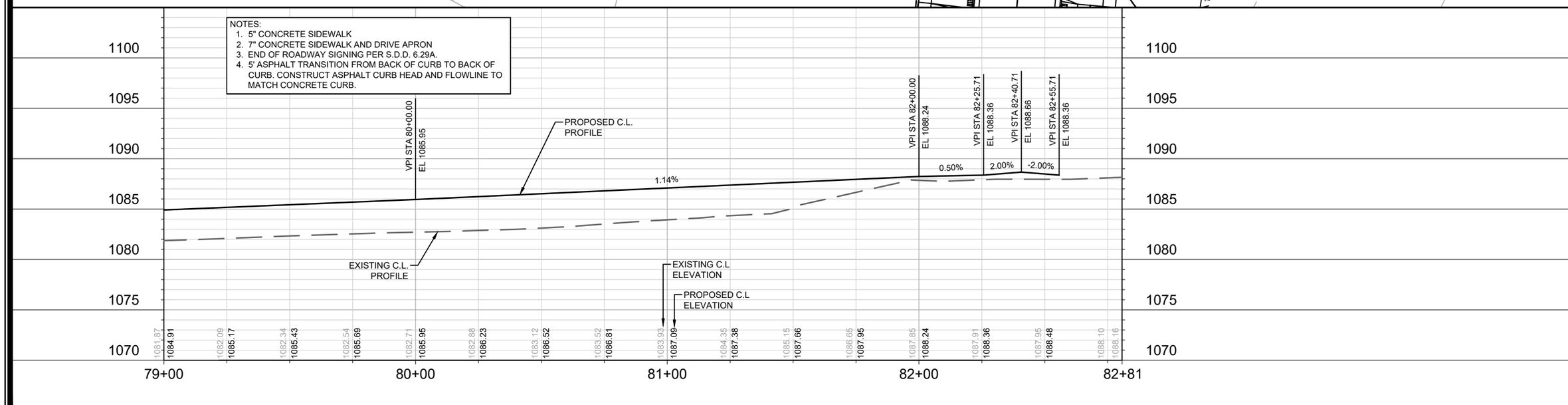

MARK	REVISION	DATE	BY
---	---	---	---
---	---	---	---
---	---	---	---
---	---	---	---
---	---	---	---

Designed By: IO | Date: 4/17/2023 2:13 PM | Scale: ########

14342

MADISON, WI

9215

CONTRACT NO:

PLAN & PROFILE - TAWNY ACORN DRIVE

ACACIA RIDGE - PHASE 8

M:\DESIGN\Projects\14342\CAD\Streets\14342EN-PnP.dwg

14342

P-5

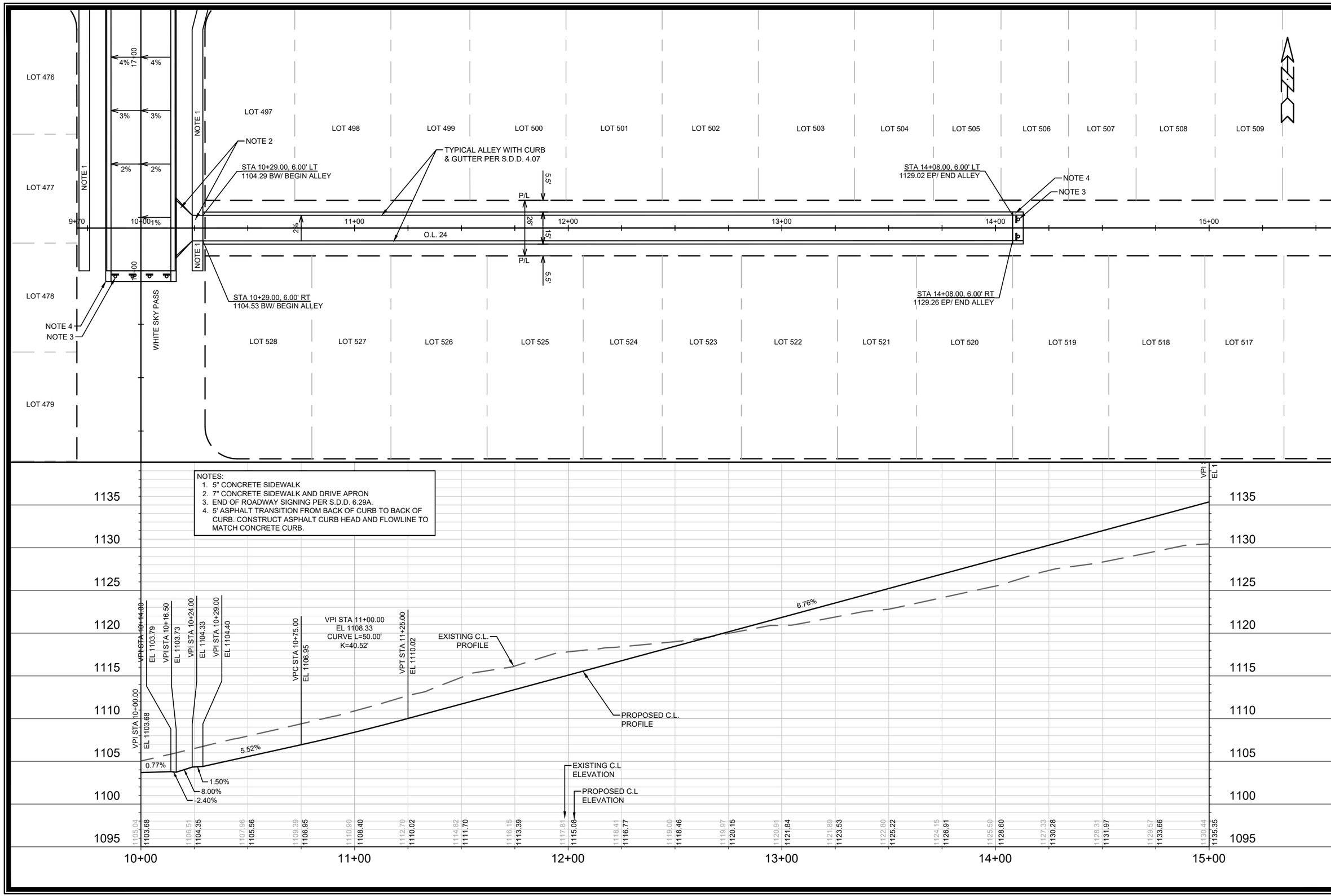

MARK	REVISION	DATE	BY
---	---	---	---
---	---	---	---
---	---	---	---
---	---	---	---
---	---	---	---

Designed By: IO | Date: 4/17/2023 2:13 PM | Scale: ########

14342

MADISON, WI

9215

CONTRACT NO:

PLAN & PROFILE - O.L.24

ACACIA RIDGE - PHASE 8

M:\DESIGN\Projects\14342\CAD\Streets\14342EN-PnP.dwg

14342

P-6

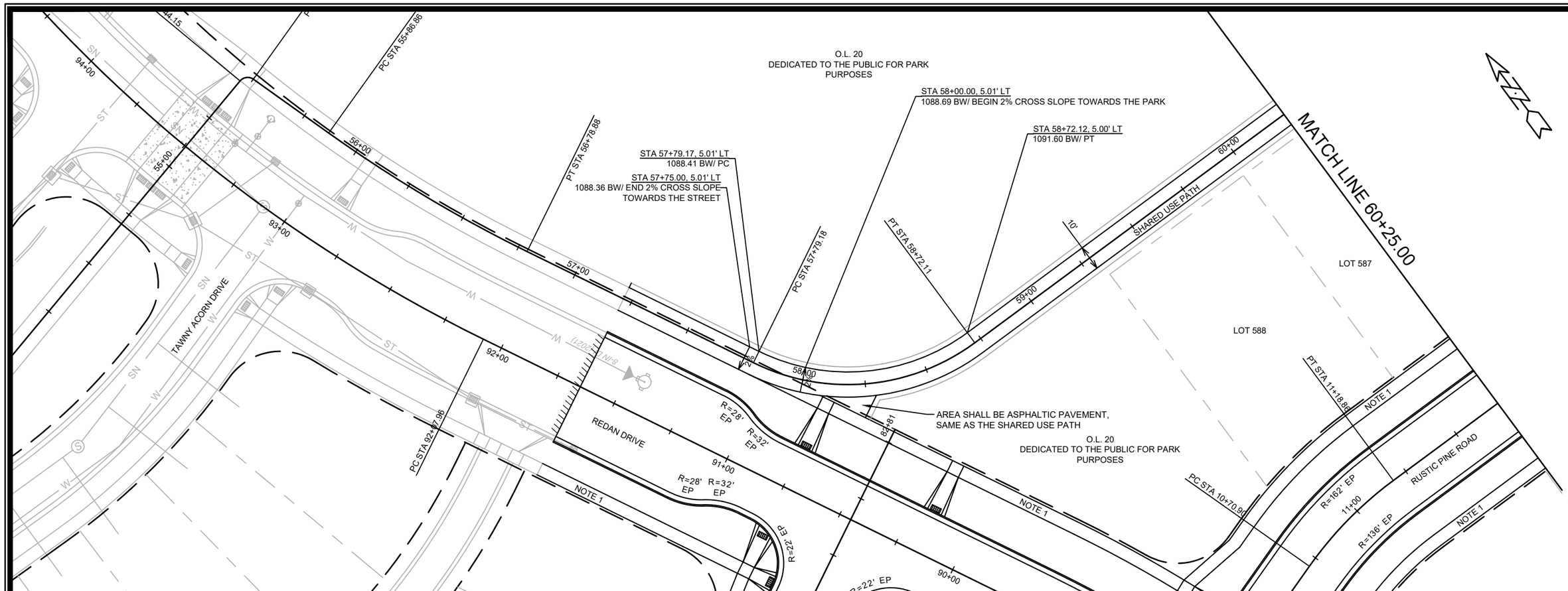

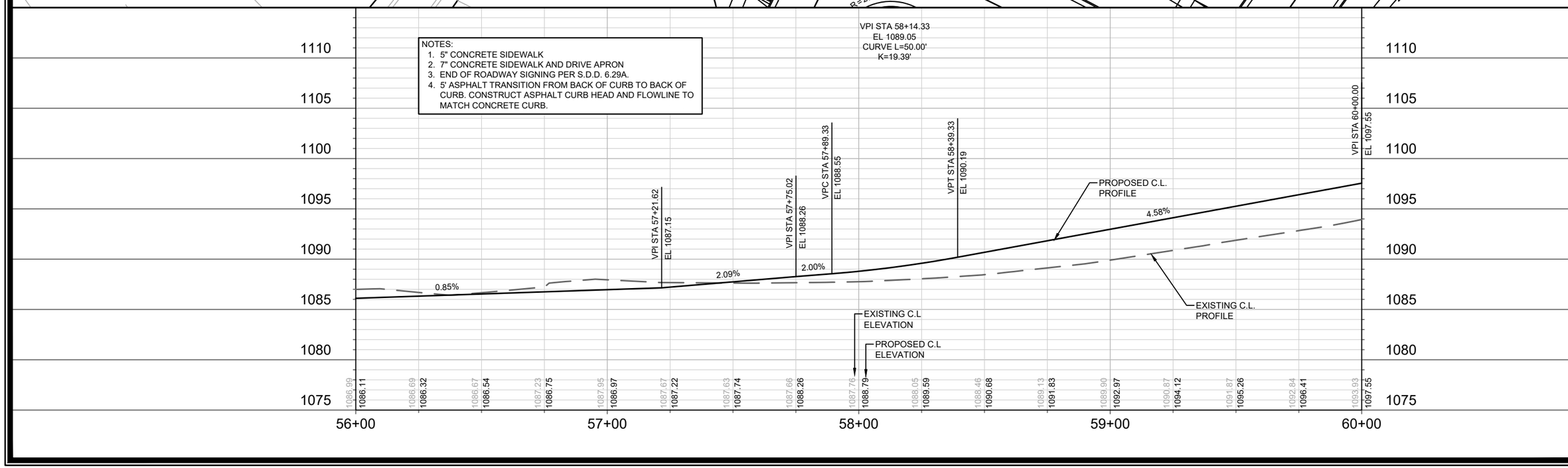

MARK	REVISION	DATE	BY
---	---	---	---
---	---	---	---
---	---	---	---
---	---	---	---
---	---	---	---

Designed By: IO | Date: 4/17/2023 2:13 PM | Scale: ########

14342

MADISON, WI

9215

CONTRACT NO:

PLAN & PROFILE - BIKE PATH

ACACIA RIDGE - PHASE 8

M:\DESIGN\Projects\14342\CAD\Streets\14342EN-PnP.dwg

14342

P-7

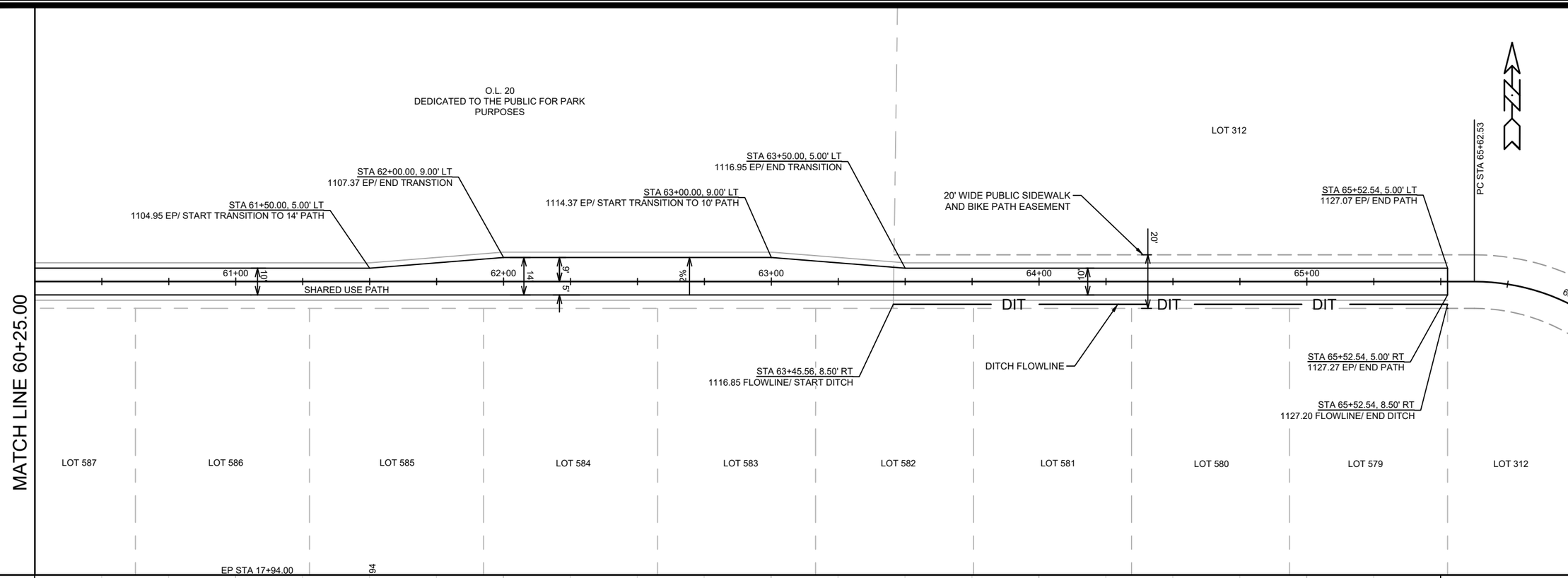

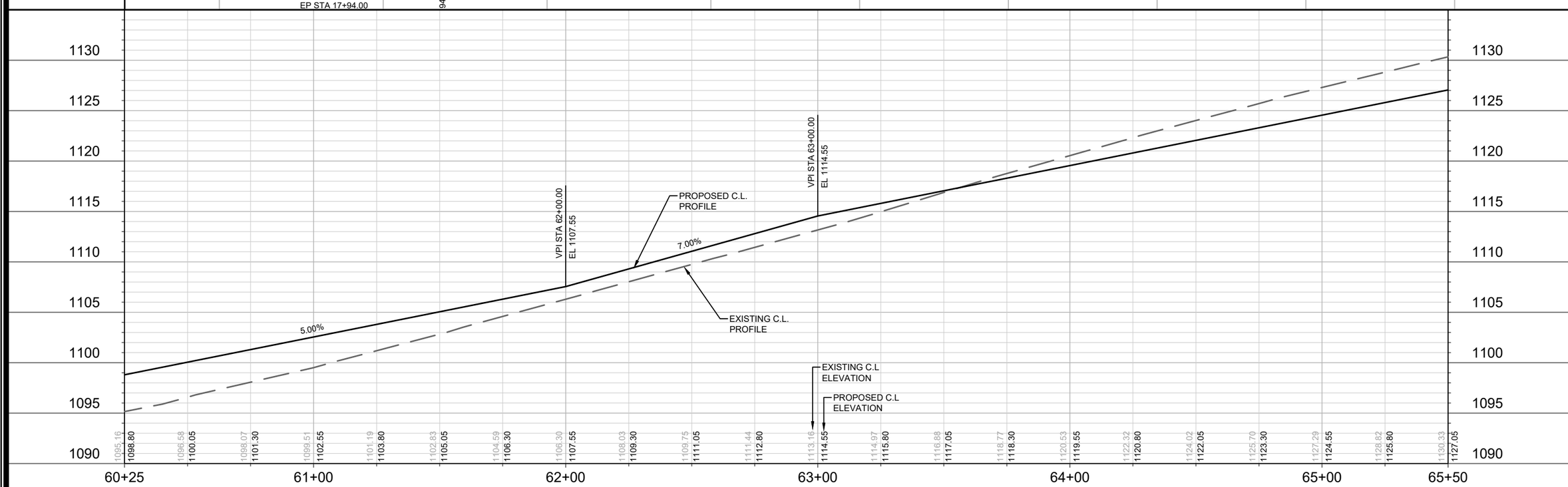

MARK	REVISION	DATE	BY
---	---	---	---
---	---	---	---
---	---	---	---
---	---	---	---
---	---	---	---

Designed By: IO | Date: 4/17/2023 2:13 PM | Scale: ########

14342

MADISON, WI

CONTRACT NO: 9215

PLAN & PROFILE - BIKE PATH

ACACIA RIDGE - PHASE 8

M:\DESIGN\Projects\14342\CAD\Streets\14342EN-PnP.dwg

CITY OF MADISON WISCONSIN

14342

P-8

P-8

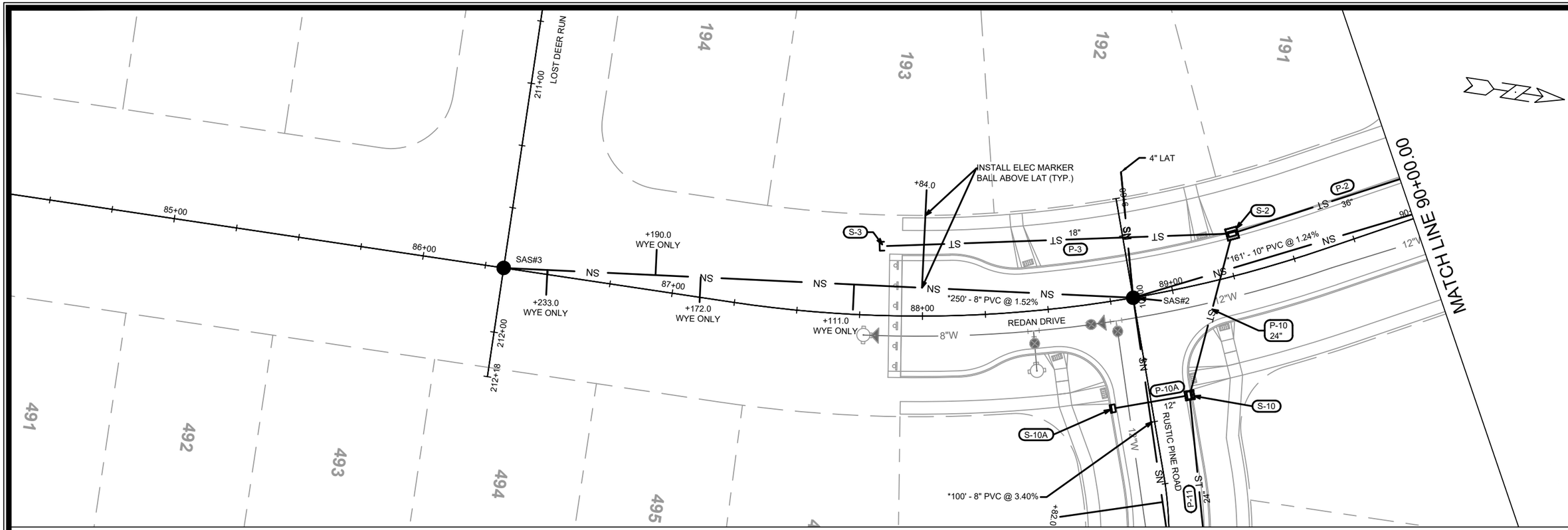

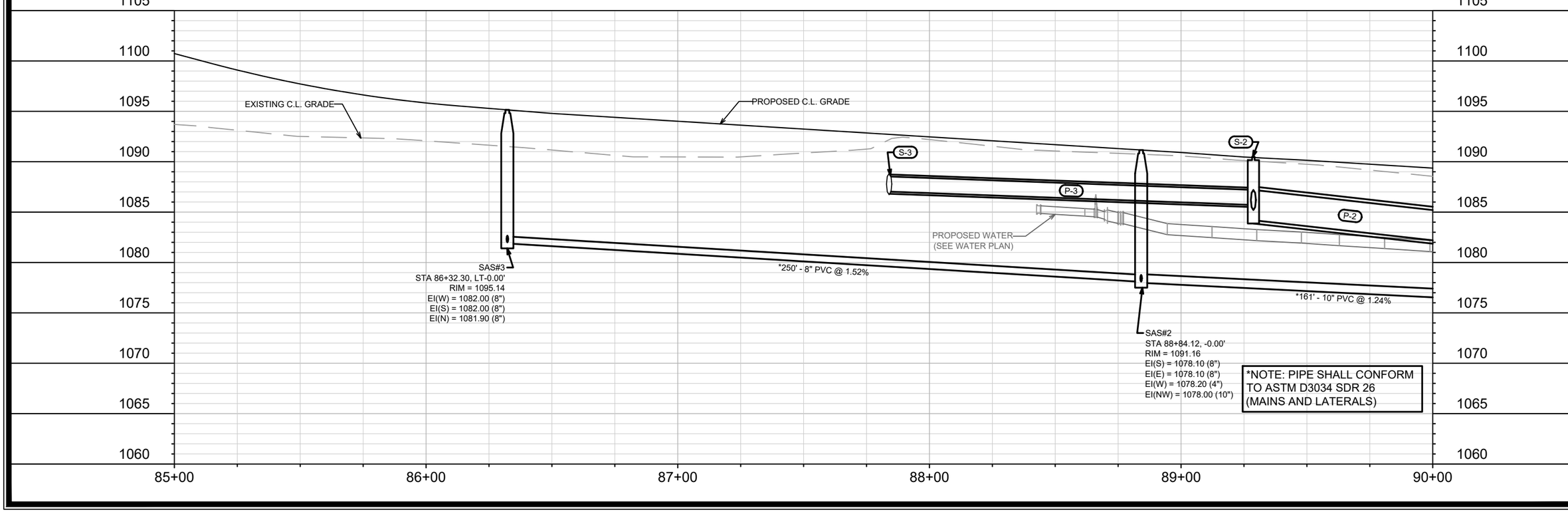

MARK	REVISION	DATE	BY
---	---	---	---
---	---	---	---
---	---	---	---
---	---	---	---
---	---	---	---

Designed By: TAC | Date: 2/20/2023 1:19 PM | Scale: ########

14342

U-1

14342

MADISON, WI

CONTRACT NO: 9215

PLAN & PROFILE - REDAN DRIVE

ACACIA RIDGE - PHASE 8

M:\DESIGN\Projects\14342\CAD\Sewers\14342SWR-PipeNetwork.dwg

CITY OF MADISON WISCONSIN

14342

U-1

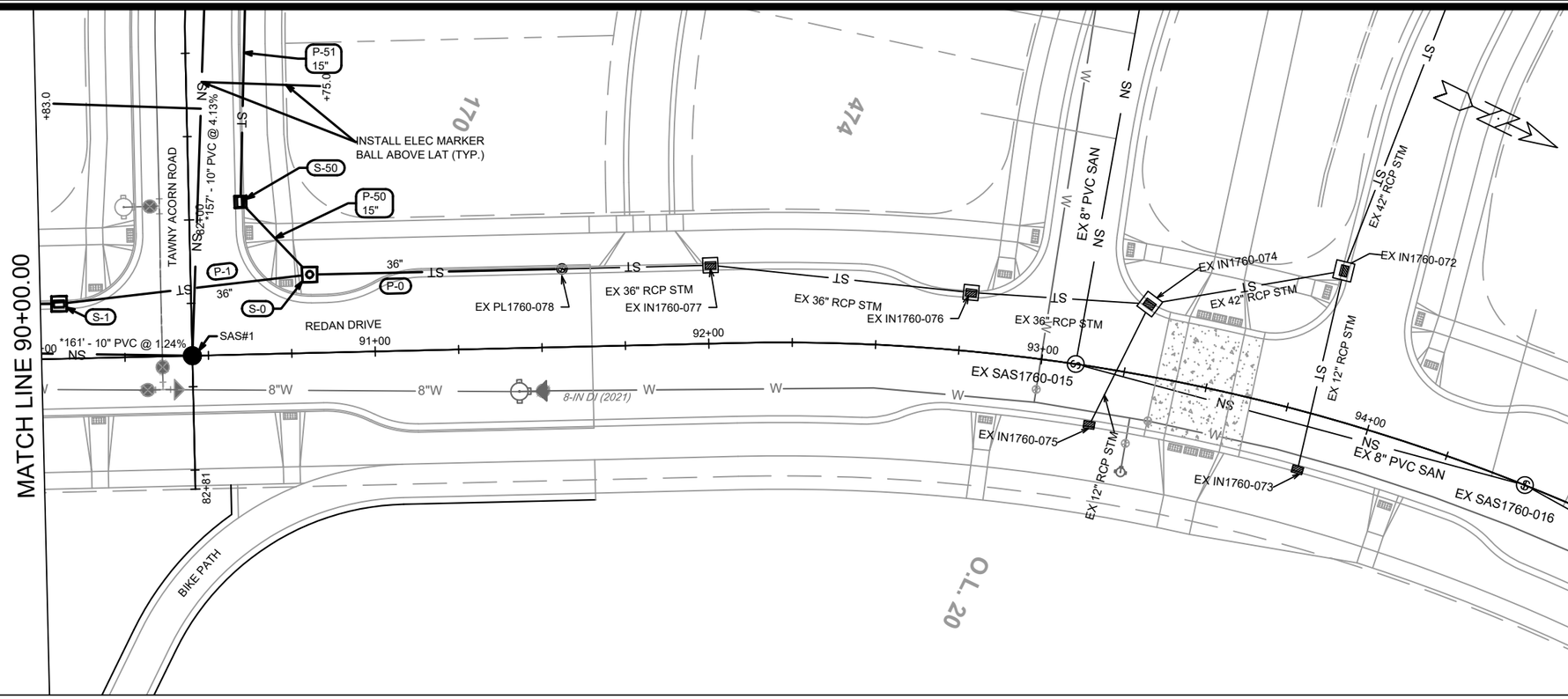

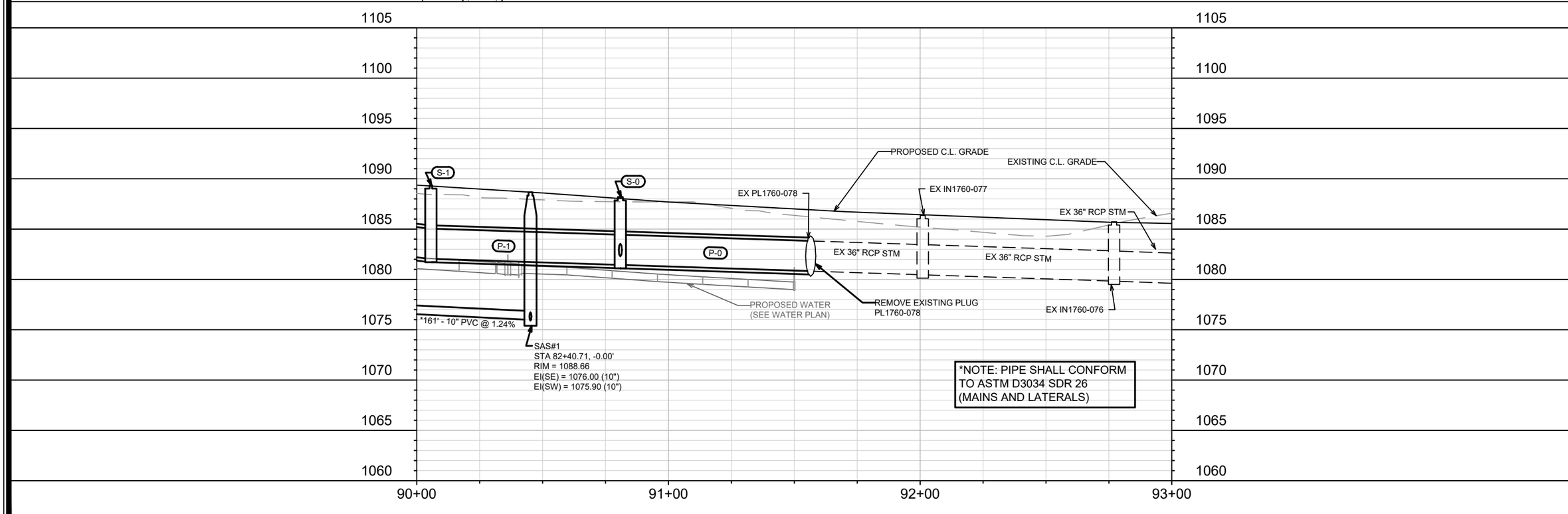

MARK	REVISION	DATE	BY
---	---	---	---
---	---	---	---
---	---	---	---
---	---	---	---
---	---	---	---

Designed By: TAC | Date: 2/20/2023 1:21 PM | Scale: ########

14342

U-2

14342

MADISON, WI

9215

CONTRACT NO:

PLAN & PROFILE - REDAN DRIVE

ACACIA RIDGE - PHASE 8

M:\DESIGN\Projects\14342\CAD\Sewers\14342SWR-PipeNetwork.dwg

CITY OF MADISON WISCONSIN

14342

U-2

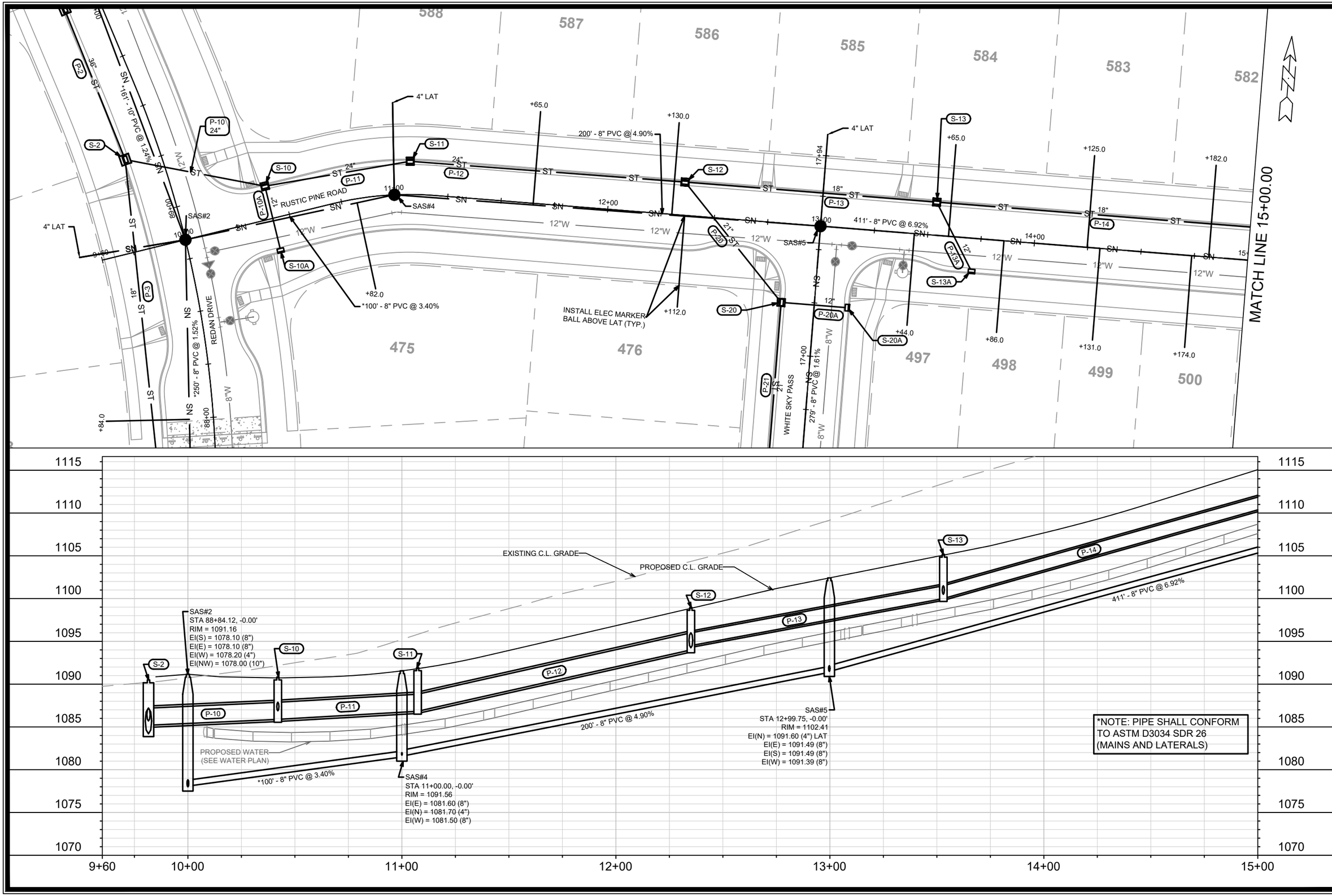

*NOTE: PIPE SHALL CONFORM TO ASTM D3034 SDR 26 (MAINS AND LATERALS)

MARK	REVISION	DATE	BY
---	---	---	---
---	---	---	---
---	---	---	---
---	---	---	---
---	---	---	---

Designed By: TAC | Date: 4/17/2023 1:06 PM | Scale: ########

U-3

14342

MADISON, WI

CONTRACT NO: 9215

PLAN & PROFILE - RUSTIC PINE ROAD

ACACIA RIDGE - PHASE 8

M:\DESIGN\Projects\14342\CAD\Sewers\14342SWR-PipeNetwork.dwg

CITY OF MADISON WISCONSIN

14342

U-3

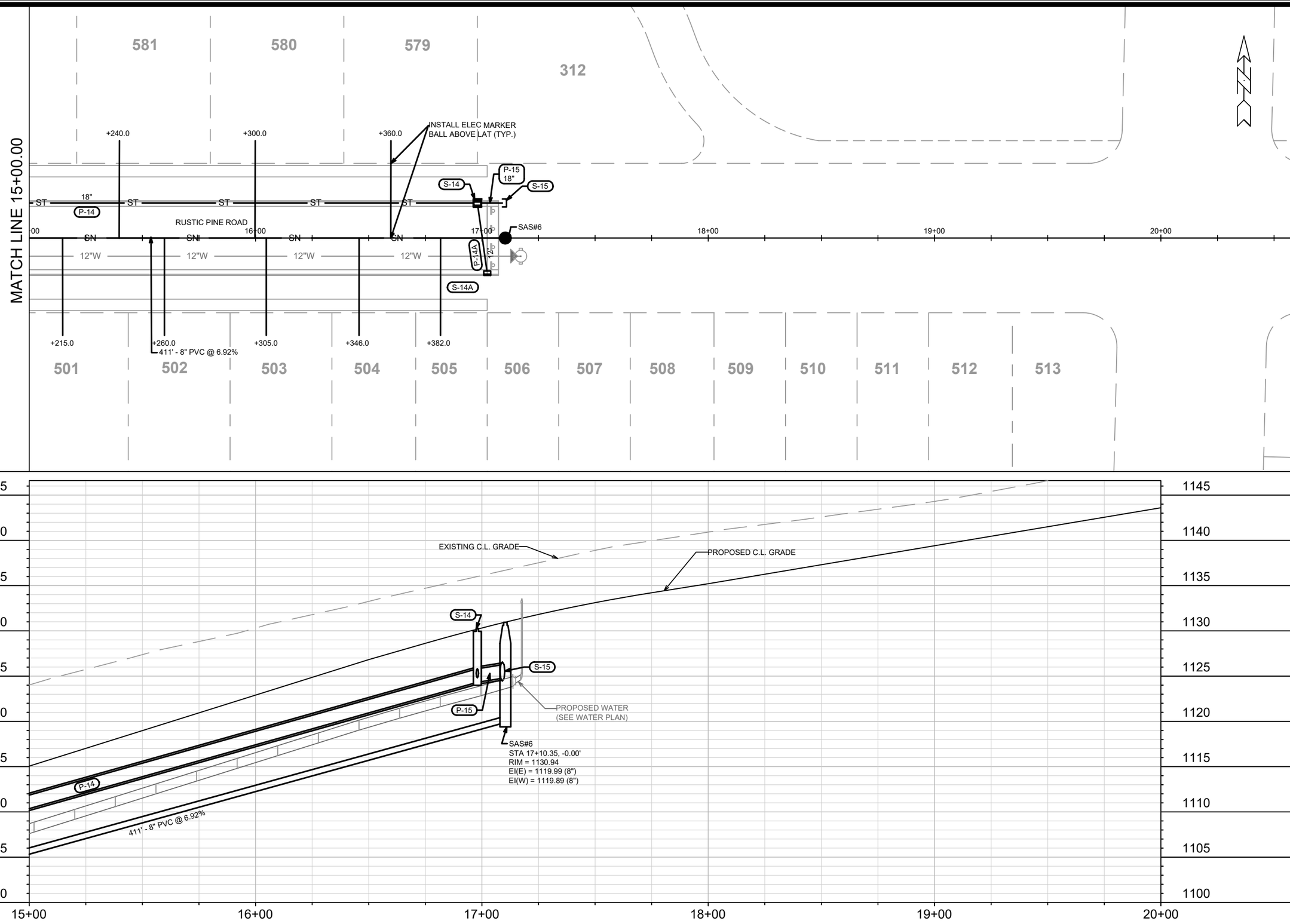

MARK	REVISION	DATE	BY
---	---	---	---
---	---	---	---
---	---	---	---
---	---	---	---
---	---	---	---

Designed By: TAC Date: 4/26/2023 3:36 PM Scale: ########

14342

U-4

14342

MADISON, WI

CONTRACT NO: 9215

PLAN & PROFILE - RUSTIC PINE ROAD

ACACIA RIDGE - PHASE 8

M:\DESIGN\Projects\14342\CAD\Sewers\14342SWR-PipeNetwork.dwg

14342

U-4

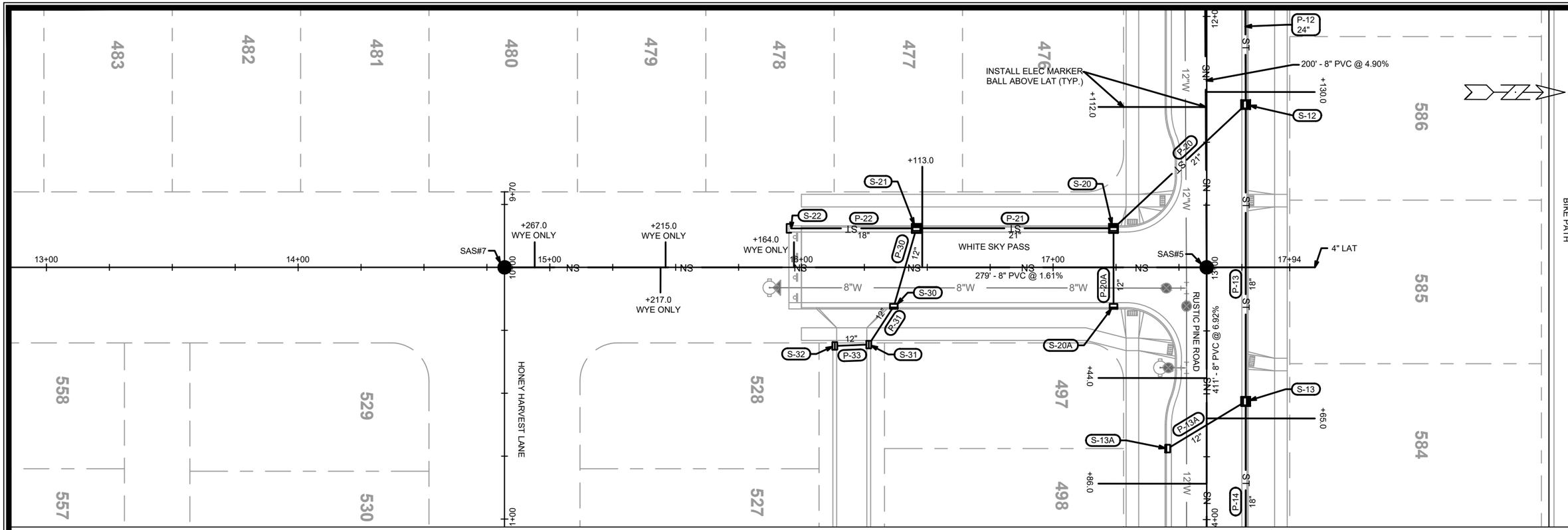

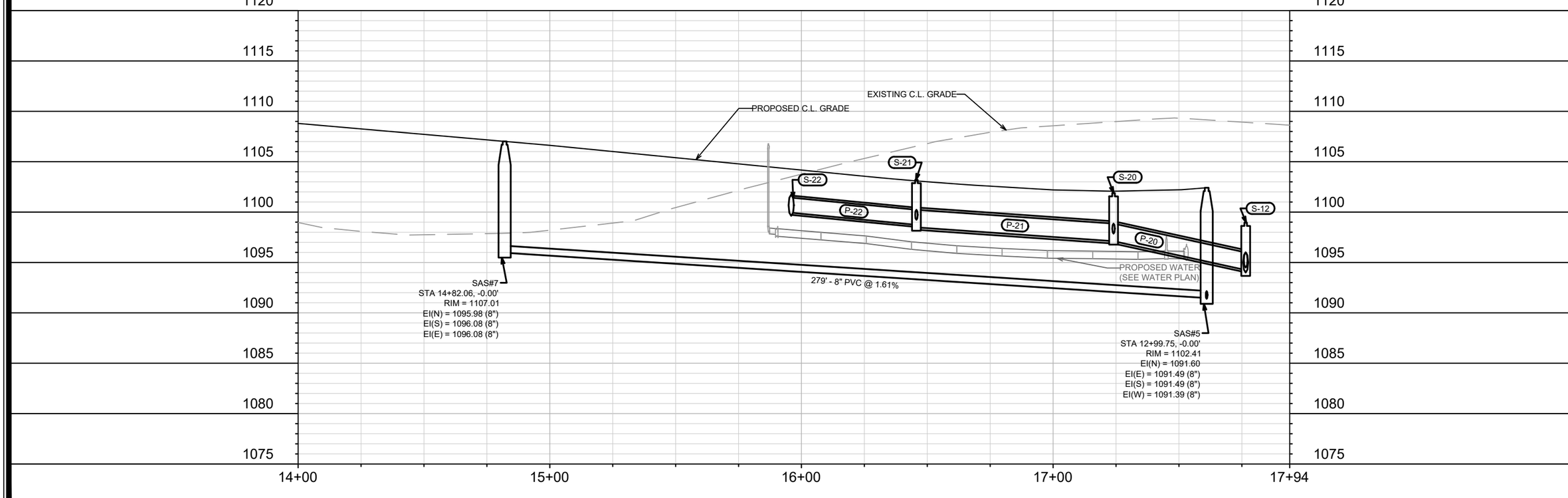

MARK	REVISION	DATE	BY
---	---	---	---
---	---	---	---
---	---	---	---
---	---	---	---
---	---	---	---
---	---	---	---

Designed By: TAC | Date: 4/17/2023 1:06 PM | Scale: ########

14342

U-5

14342

MADISON, WI

9215

CONTRACT NO:

PLAN & PROFILE - WHITE SKY PASS

ACACIA RIDGE - PHASE 8

M:\DESIGN\Projects\14342\CAD\Sewers\14342SWR-PipeNetwork.dwg

CITY OF MADISON WISCONSIN

14342

U-5

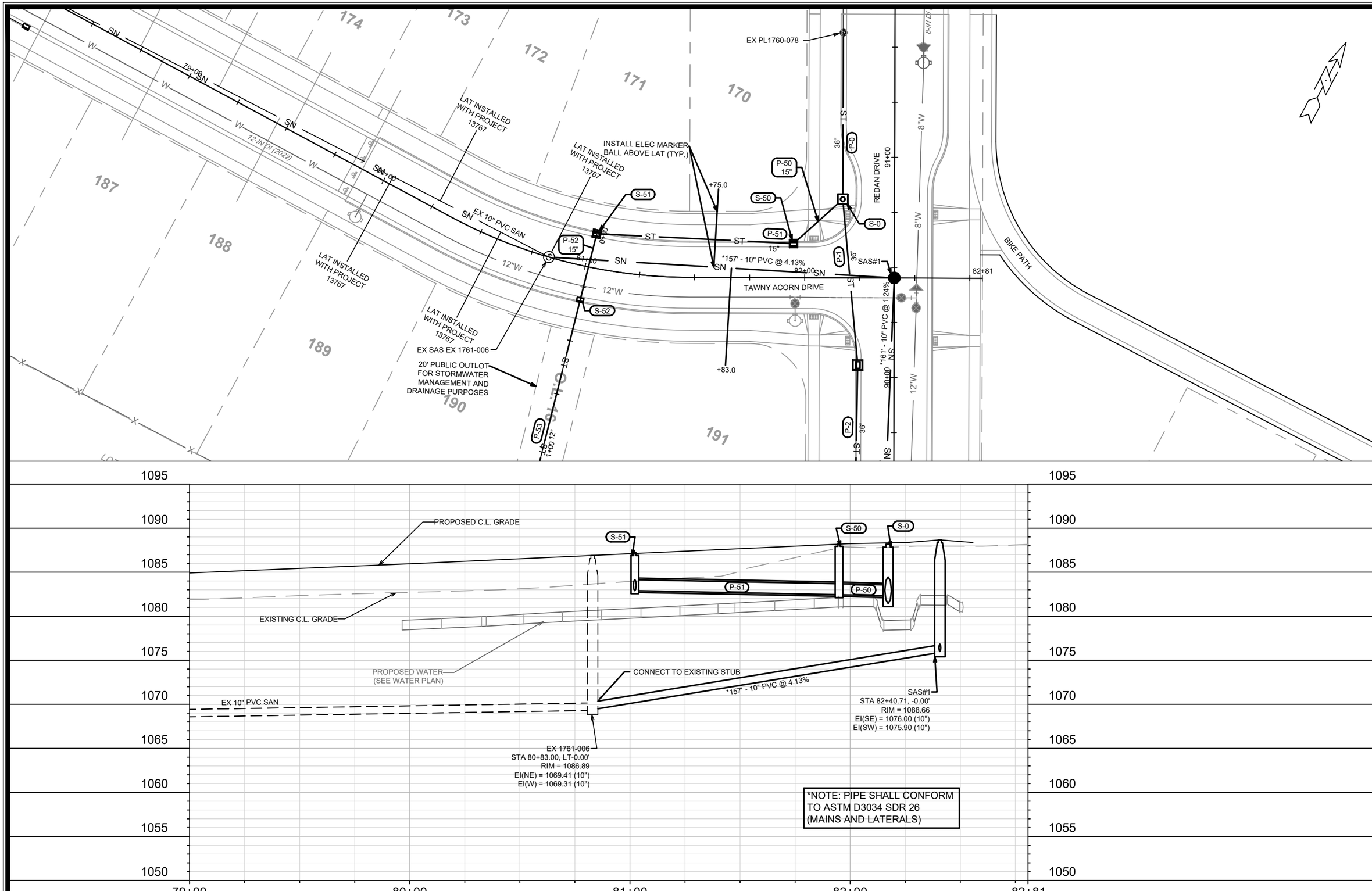

MARK	REVISION	DATE	BY
---	---	---	---
---	---	---	---
---	---	---	---
---	---	---	---
---	---	---	---

Designed By: TAC | Date: 2/20/2023 1:37 PM | Scale: ########

14342 | U-6

14342

MADISON, WI

9215

CONTRACT NO:

PLAN & PROFILE - TAWNY ACORN DRIVE

ACACIA RIDGE - PHASE 8

M:\DESIGN\Projects\14342\CAD\Sewers\14342SWR-PipeNetwork.dwg

14342

U-6

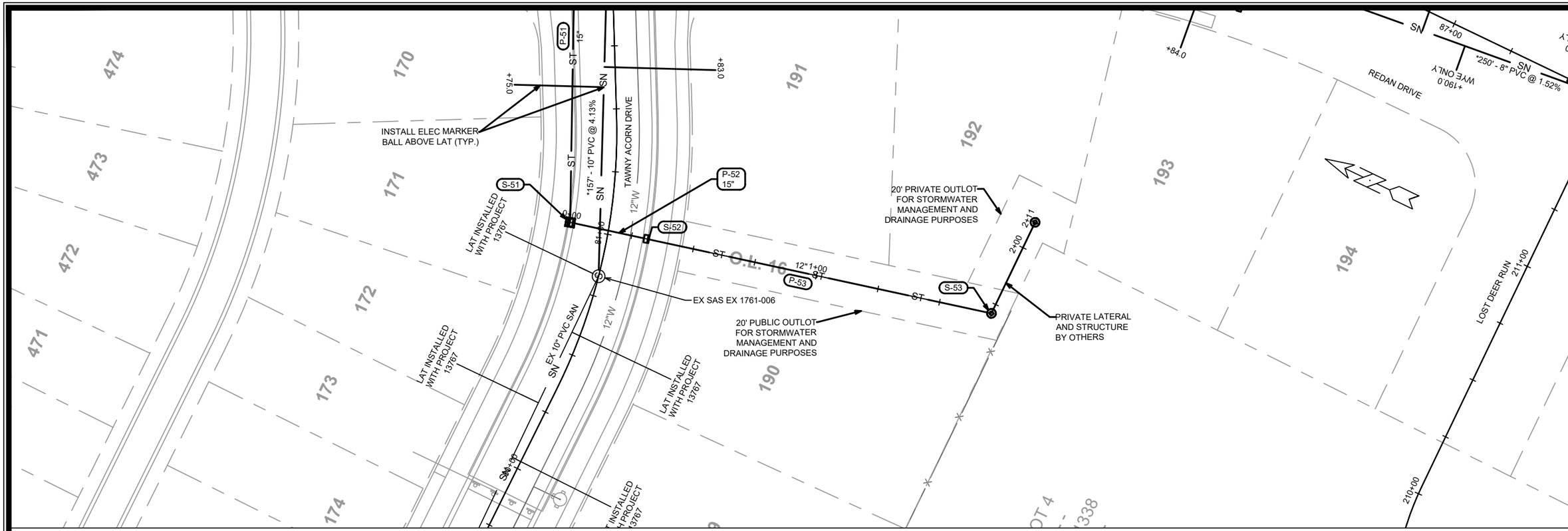

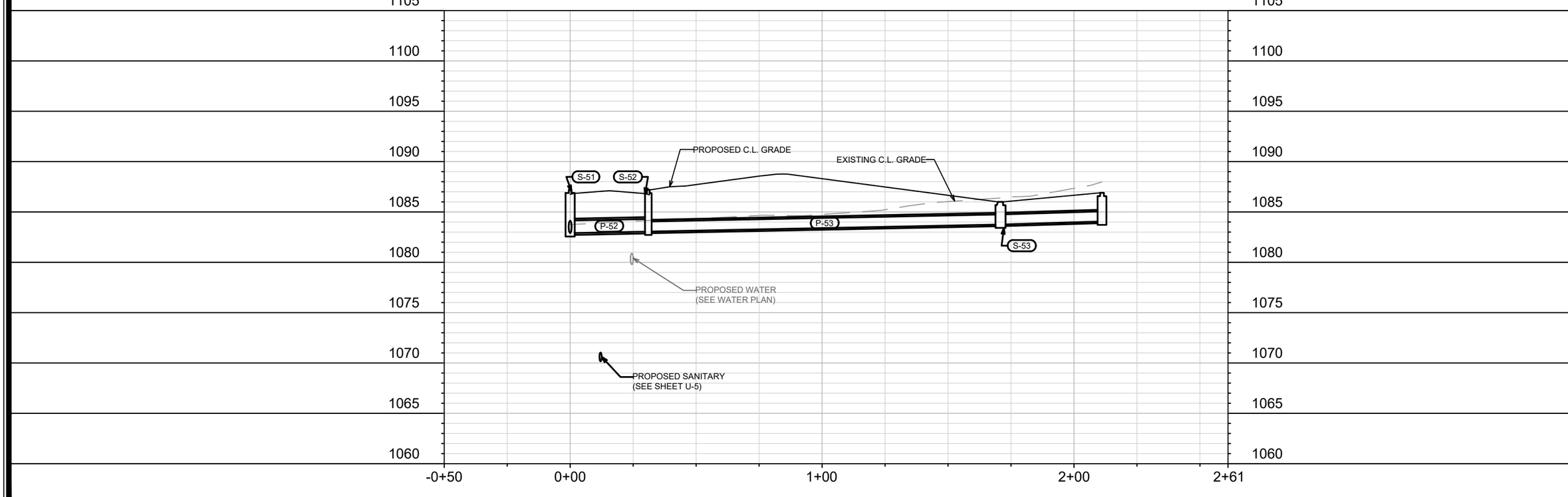

MARK	REVISION	DATE	BY
---	---	---	---
---	---	---	---
---	---	---	---
---	---	---	---
---	---	---	---
---	---	---	---

Designed By: IO | Date: 3/21/2023 8:40 AM | Scale: ########

14342

U-7

14342

MADISON, WI

CONTRACT NO: 9215

PLAN & PROFILE - OUTLOT 16

ACACIA RIDGE - PHASE 8

M:\DESIGN\Projects\14342\CAD\Sewers\14342SWR-PipeNetwork.dwg

CITY OF MADISON WISCONSIN

14342

U-7

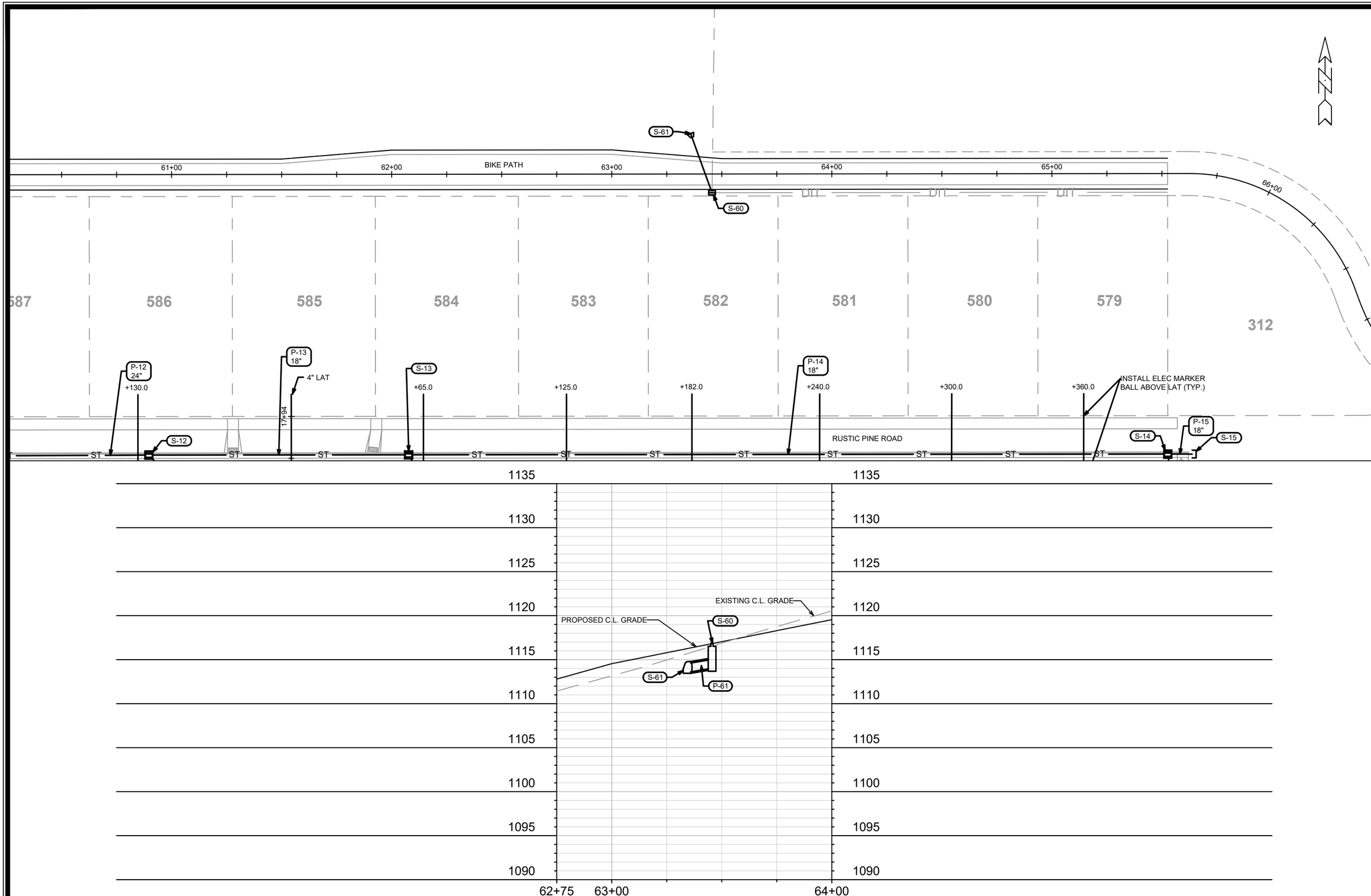

MARK	REVISION	DATE	BY
---	---	---	---
---	---	---	---
---	---	---	---
---	---	---	---

Designed By: TAC | Date: 3/1/2023 2:18 PM | Scale: ########

14342

U-8

14342

MADISON, WI

CONTRACT NO: 9215

PLAN & PROFILE - BIKE PATH

ACACIA RIDGE - PHASE 8

M:\DESIGN\Projects\14342\CAD\Sewers\14342SWR-PipeNetwork.dwg

14342

U-8

ACACIA RIDGE PHASE 8	SHEET NO.
PROJECT NO. 14342	U-9
SANITARY SEWER SCHEDULE	
CITY OF MADISON	

SANITARY SEWER SCHEDULE

PROPOSED SANITARY STRUCTURES

SAS NO.	STATION	LOCATION (OFFSET)	TOP OF CASTING	E.I.	DEPTH	NOTES
REDAN DRIVE						
SAS#2	88+84.12	CL	1091.16	1078.00	13.16	-
SAS#3	86+32.30	CL	1095.14	1081.90	13.24	-
RUSTIC PINE ROAD						
SAS#4	11+00.00	CL	1091.56	1081.50	10.06	-
SAS#5	12+99.75	CL	1102.41	1091.39	11.02	-
SAS#6	17+10.35	CL	1130.94	1119.89	11.05	-
TAWNY ACORN DRIVE						
SAS#1	82+40.71	CL	1088.66	1075.90	12.76	-
WHITE SKY PASS						
SAS#7	14+82.06	CL	1107.01	1095.98	11.03	-

PROPOSED SANITARY PIPES

FROM (DNSTM)	TO (UPSTM)	DWNSTRM E.I.	UPSTRM E.I.	PLAN (PAY) LGTH (FT)	SLOPE (%)	PIPE SIZE	PVC TYPE	NOTES
REDAN DRIVE								
SAS#1	SAS#2	1076.00	1078.00	161	1.24%	10"	SDR-26	-
SAS#2	SAS#3	1078.10	1081.90	250	1.52%	8"	SDR-26	-
RUSTIC PINE ROAD								
SAS#2	SAS#4	1078.10	1081.50	100	3.40%	8"	SDR-26	-
SAS#4	SAS#5	1081.60	1091.39	200	4.90%	8"	SDR-35	-
SAS#5	SAS#6	1091.49	1119.89	411	6.92%	8"	SDR-35	-
TAWNY ACORN DRIVE								
EX 1761-006	SAS#1	1069.41	1075.90	157	4.13%	10"	SDR-26	-
WHITE SKY PASS								
SAS#5	SAS#7	1091.49	1095.98	279	1.61%	8"	SDR-35	-

SPECIFIC NOTES

STORM SEWER SCHEDULE

ACACIA RIDGE PHASE 8	SHEET NO.
PROJECT NO. 14342	U-10
STORM SEWER SCHEDULE	
CITY OF MADISON	

PROPOSED STORM STRUCTURES

STRUC. NO.	STATION	LOCATION (OFFSET)	TYPE	TOP OF CASTING	E.I.	DEPTH	NOTES
BIKE PATH							
S-60	63+45.56	RT-8.50	H INLET	1116.85	1114.02	2.83	FP, W/R-1878-B7G
S-61	63+35.85	LT-18.37	12" RCP AE	-	1113.62	-	W/GATE
REDAN DRIVE							
S-0	90+80.90	LT-23.50	4x4 STORM SAS	1088.18	1081.44	6.74	W/R-1550-0054
S-1	90+05.62	LT-16.50	4x4 STORM SAS	1089.35	1082.04	7.31	W/R-3067-7004-V
S-2	89+28.73	LT-16.50	4x4 STORM SAS	1090.49	1084.20	6.29	W/R-3067-7004-V
S-3	87+83.99	LT-27.60	PLUG	-	1087.03	-	-
RUSTIC PINE ROAD							
S-10	10+42.02	LT-15.50	3x3 STORM SAS	1090.82	1085.88	4.94	[1], LP, W/R-3067-7004-VB
S-10A	10+42.02	RT-15.50	H INLET	1090.82	1087.50	3.32	[1], LP, W/R-3067-7004-VB
S-11	11+07.37	LT-15.50	3x3 STORM SAS	1091.90	1086.83	5.07	W/R-3067-7004-V
S-12	12+35.05	LT-15.50	3x3 STORM SAS	1098.96	1094.00	4.96	W/R-3067-7004-V
S-13	13+53.02	LT-15.50	3x3 STORM SAS	1105.17	1100.00	5.17	W/R-3067-7004-V
S-13A	13+71.77	RT-15.50	H INLET	1106.11	1102.78	3.33	W/R-3067-7004-V
S-14	16+98.00	LT-15.50	3x3 STORM SAS	1130.28	1124.32	5.96	W/R-3067-7004-V
S-14A	17+02.35	RT-15.50	H INLET	1130.56	1127.23	3.33	W/R-3067-7004-V
S-15	17+09.06	LT-15.50	PLUG	-	1124.76	-	-
TAWNY ACORN DRIVE							
S-50	81+94.92	LT-15.50	3x3 STORM SAS	1088.27	1082.44	5.83	W/R-3067-7004-V
S-51	81+02.19	LT-15.50	3x3 STORM SAS	1087.22	1082.89	4.33	W/R-3067-7004-V
S-52	81+00.89	RT-15.50	H INLET	1087.20	1083.05	4.15	W/R-3067-7004-V
S-53	80+97.61	RT-155.48	3' DIA STORM SAS	1086.00	1083.75	2.25	W/R-1689-2560-E
WHITE SKY PASS							
S-20	17+24.00	LT-15.50	3x3 STORM SAS	1101.89	1097.11	4.78	(1), LP, W/R-3067-7004-V
S-20A	17+24.00	RT-15.50	H INLET	1103.01	1098.75	4.26	LP, W/R-3067-7004-VB
S-21	16+45.67	LT-15.50	3x3 STORM SAS	1103.20	1098.48	4.72	W/R-3067-7004-V
S-22	15+95.92	LT-15.50	PLUG	-	1099.93	-	-
S-30	16+36.68	RT-15.50	H INLET	1103.88	1100.25	3.63	W/R-3067-7004-V
S-31	16+26.75	RT-30.70	H INLET	1104.32	1100.91	3.41	W/R-3362-L
S-32	16+13.25	RT-31.20	H INLET	1104.60	1101.15	3.45	W/R-3362-L

PROPOSED STORM PIPES

PIPE NO.	FROM (DNSTM)	TO (UPSTM)	DISCH. E.I.	INLET E.I.	PLAN (PAY) LGTH (FT)	PIPE LGTH (FT)	SLOPE (%)	PIPE SIZE	TYPE	NOTES
BIKE PATH										
P-61	S-61	S-60	1113.62	1114.02	28.5	27.5	1.45%	12"	RCP	-
REDAN DRIVE										
P-0	PL1760-078	S-0	1080.82	1081.44	75.5	73.6	0.84%	36"	RCP	-
P-1	S-0	S-1	1081.44	1082.04	75.5	71.6	0.84%	36"	RCP	-
P-2	S-1	S-2	1082.04	1084.20	76.0	71.8	3.01%	36"	RCP	-
P-3	S-2	S-3	1085.70	1087.03	138.5	136.3	0.98%	18"	TYPE II	-
RUSTIC PINE ROAD										
P-10	S-2	S-10	1085.20	1085.88	66.5	62.5	1.09%	24"	RCP	-
P-10A	S-10	S-10A	1086.88	1087.50	31.0	28.5	2.17%	12"	RCP	-
P-11	S-10	S-11	1085.88	1086.83	69.0	65.9	1.44%	24"	TYPE II	-
P-12	S-11	S-12	1086.83	1094.00	129.0	126.0	5.69%	24"	TYPE II	-
P-13	S-12	S-13	1094.50	1100.00	118.0	115.1	4.78%	18"	TYPE II	-
P-13A	S-13	S-13A	1100.50	1102.78	36.5	33.3	6.85%	12"	RCP	-
P-14	S-13	S-14	1100.00	1124.32	345.0	342.1	7.11%	18"	TYPE II	-
P-14A	S-14	S-14A	1124.82	1127.23	31.5	28.9	8.35%	12"	RCP	-
P-15	S-14	S-15	1124.32	1124.76	11.0	9.6	4.58%	18"	TYPE II	
TAWNY ACORN DRIVE										
P-50	S-0	S-50	1082.29	1082.44	30.0	25.7	0.58%	15"	TYPE II	-
P-51	S-50	S-51	1082.44	1082.89	89.5	86.5	0.52%	15"	TYPE II	-
P-52	S-51	S-52	1082.89	1083.05	31.0	29.0	0.55%	12"	RCP	-
P-53	S-52	S-53	1083.05	1083.75	140.0	137.6	0.51%	12"	RCP	-
WHITE SKY PASS										
P-20	S-12	S-20	1094.87	1097.11	72.0	67.7	3.31%	21"	RCP	-
P-20A	S-20	S-20A	1097.86	1098.75	31.0	28.5	3.12%	12"	RCP	-
P-21	S-20	S-21	1097.11	1098.48	78.5	75.4	1.82%	21"	TYPE II	-
P-22	S-21	S-22	1098.73	1099.93	50.0	48.3	2.49%	18"	TYPE II	-
P-30	S-21	S-30	1099.23	1100.25	32.5	29.7	3.43%	12"	RCP	-
P-31	S-30	S-31	1100.25	1100.91	18.0	15.0	4.40%	12"	TYPE II	-
P-32	S-31	S-32	1100.91	1101.15	14.0	12.0	2.00%	12"	RCP	-

NOTE: PLAN LENGTH (PAY LENGTH) IS FROM CENTER OF STRUCTURE TO CENTER OF STRUCTURE. PIPE LENGTH IS ACTUAL LENGTH OF PIPE FROM STRUCTURE WALL TO STRUCTURE WALL. SLOPE CALCULATED USING PIPE LENGTH.

SPECIFIC NOTES

[1] INSTALL LOW POINT PVC DRAIN, SEE S.D.D. 5.7.7A

STANDARD NOTES:

- ABBREVIATIONS: AE = APRON ENDWALL; RCP = REINFORCED CONCRETE PIPE; HERCP = HORIZONTAL ELLIPTICAL REINFORCED CONCRETE PIPE; DNA = DOES NOT APPLY; SAS = SEWER ACCESS STRUCTURE; LP = LOW POINT INLET STRUCTURE; FP = FIELD POURED STRUCTURE; TR = TOP OF CONCRETE ROOF; NCM = NO CROWN MATCH FOR PIPES; UD = UNDERDRAIN
- TOP OF CASTING GRADE GIVEN IS THE TOP OF CURB FOR INLET STRUCTURES AND THE FLOWLINE OF THE CLOSED CASTING FOR SASs.
- TOP OF CONCRETE ROOF (TR) IS 1.25 BELOW TOP OF CASTING UNLESS OTHERWISE NOTED.
- ALL REINFORCED CONCRETE PIPES TO BE CLASS III UNLESS OTHERWISE NOTED.
- SURVEYOR TO CONFIRM THAT ALL INLET STATION / OFFSETS LINE UP WITH PROPOSED CURB AND GUTTER.
- ALL REBAR FOR FIELD POUR STRUCTURES SHALL BE EPOXY COATED. ANY EXPOSED STEEL SHALL BE TOUCHED UP OR RECOATED PRIOR TO USE.
- ALL FIELD POURED SAS STORM STRUCTURES SHALL BE CONSTRUCTED IN ACCORDANCE WITH STANDARD DETAIL DRAWING 5.7.3.
- ALL PRECAST SAS STORM STRUCTURES SHALL BE CONSTRUCTED IN ACCORDANCE WITH STANDARD DETAIL DRAWING 5.7.5.
- ALL STRUCTURES CALLED OUT AS FIELD POURED SHALL BE FIELD POURED. ALL OTHER STRUCTURES (NOT INDICATED AS FIELD POURED) SHALL BE SUBMITTED TO CITY ENGINEERING FOR APPROVAL IF PRECAST STRUCTURES ARE PREFERRED. CONTACT TODD CHOJNOWSKI OF CITY ENGINEERING AT (608) 266-4094 FOR PRECAST APPROVALS, FAX SHOP DRAWINGS TO (608)264-9275, OR EMAIL SHOP DRAWINGS TO TCHOJNOWSKI@CITYOFMADISON.COM.

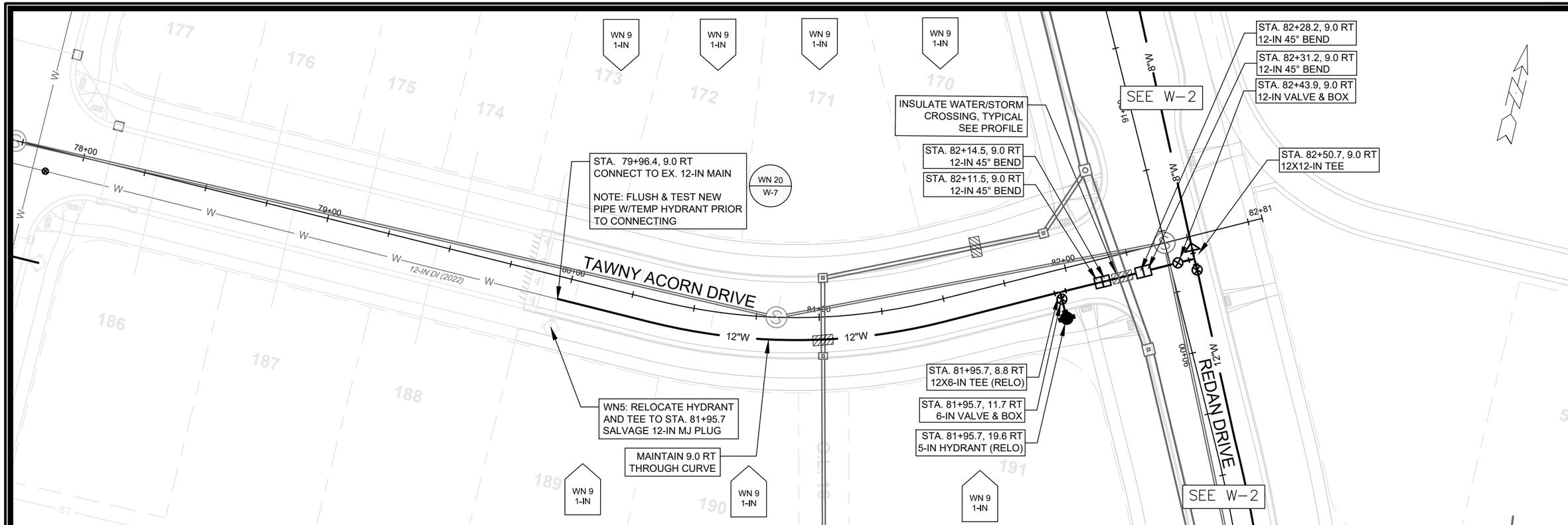

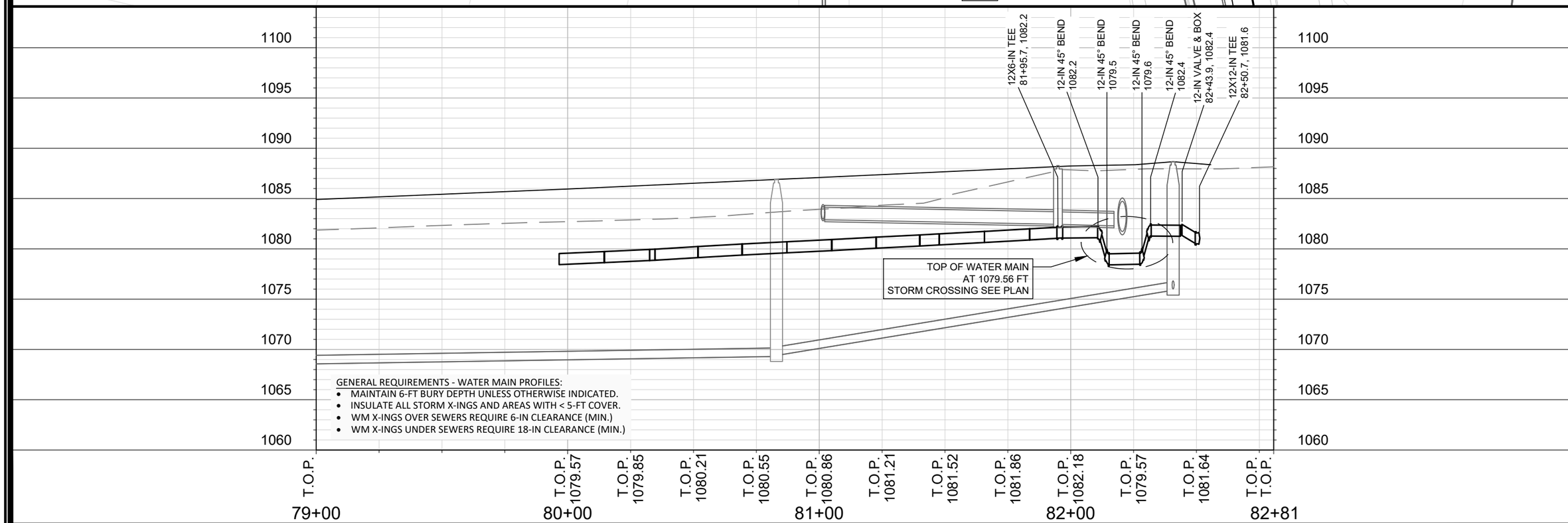

GENERAL REQUIREMENTS - WATER MAIN PROFILES:

- MAINTAIN 6-FT BURY DEPTH UNLESS OTHERWISE INDICATED.
- INSULATE ALL STORM X-INGS AND AREAS WITH < 5-FT COVER.
- WM X-INGS OVER SEWERS REQUIRE 6-IN CLEARANCE (MIN.)
- WM X-INGS UNDER SEWERS REQUIRE 18-IN CLEARANCE (MIN.)

SCALE: 1" = 40'
DESIGNED BY: NGM
MADISON WATER UTILITY
119 E OLIN AVE, MADISON, WI 53713
PRINTING DATE:2/14/23

CONTRACT NO: 9215

ACACIA RIDGE - PHASE 8

WATER PLAN AND PROFILE - TAWNY ACORN DRIVE

CITY OF MADISON, WISCONSIN

14342

W-1

- INSULATE LATERALS WHERE SHOWN
- PROVIDE MIN. 18" CLEARANCE UNDER STORM

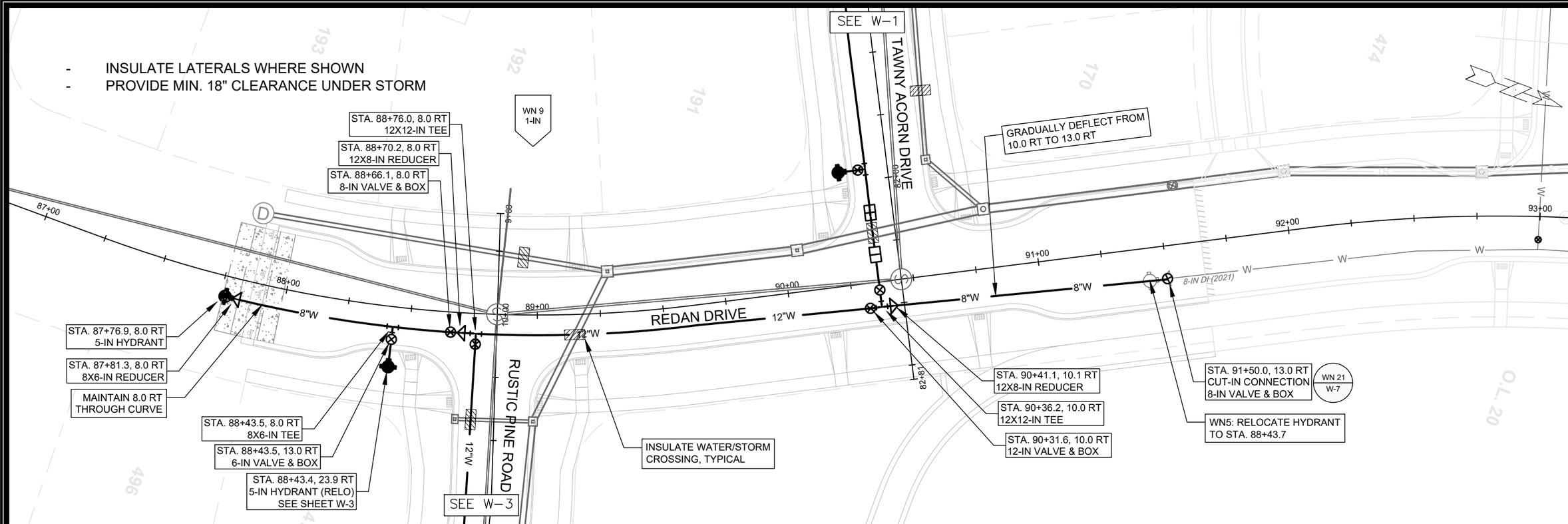

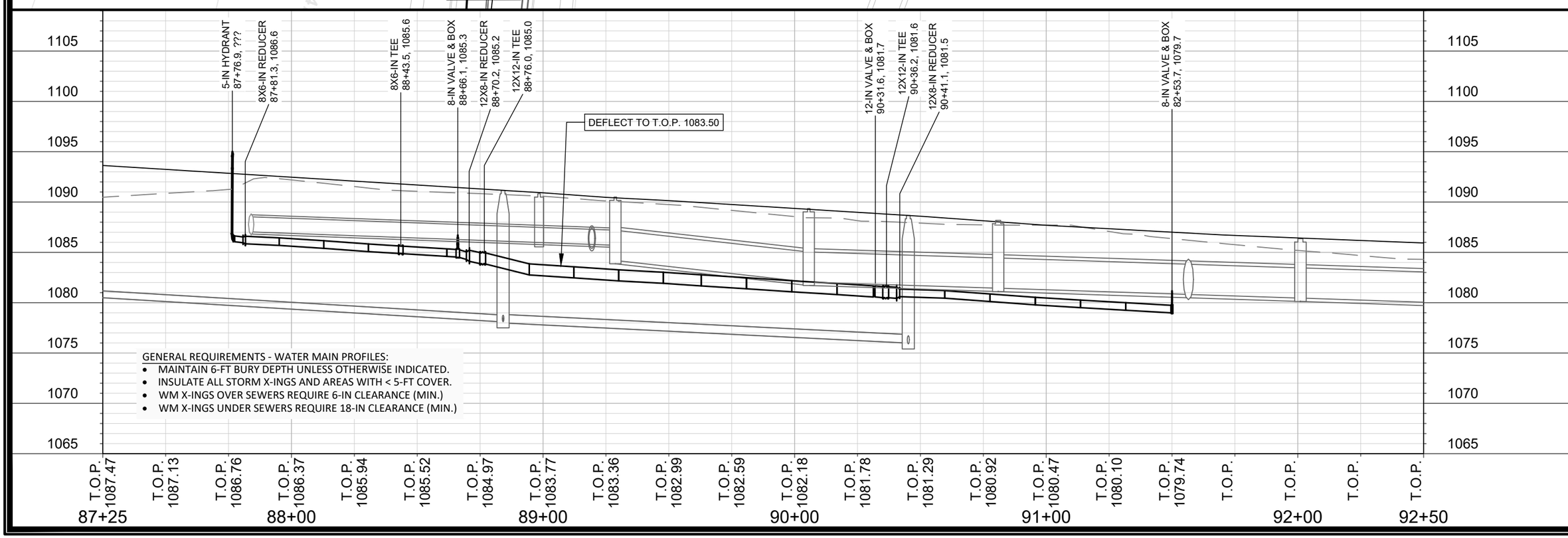

GENERAL REQUIREMENTS - WATER MAIN PROFILES:

- MAINTAIN 6-FT BURY DEPTH UNLESS OTHERWISE INDICATED.
- INSULATE ALL STORM X-INGS AND AREAS WITH < 5-FT COVER.
- WM X-INGS OVER SEWERS REQUIRE 6-IN CLEARANCE (MIN.)
- WM X-INGS UNDER SEWERS REQUIRE 18-IN CLEARANCE (MIN.)

SCALE: 1" = 40'
DESIGNED BY: NGM
MADISON WATER UTILITY
119 E OLIN AVE, MADISON, WI 53713
PRINTING DATE: 2/14/23

CONTRACT NO: 9215

ACACIA RIDGE - PHASE 8
WATER PLAN AND PROFILE - REDAN DRIVE
CITY OF MADISON, WISCONSIN

14342
W-2

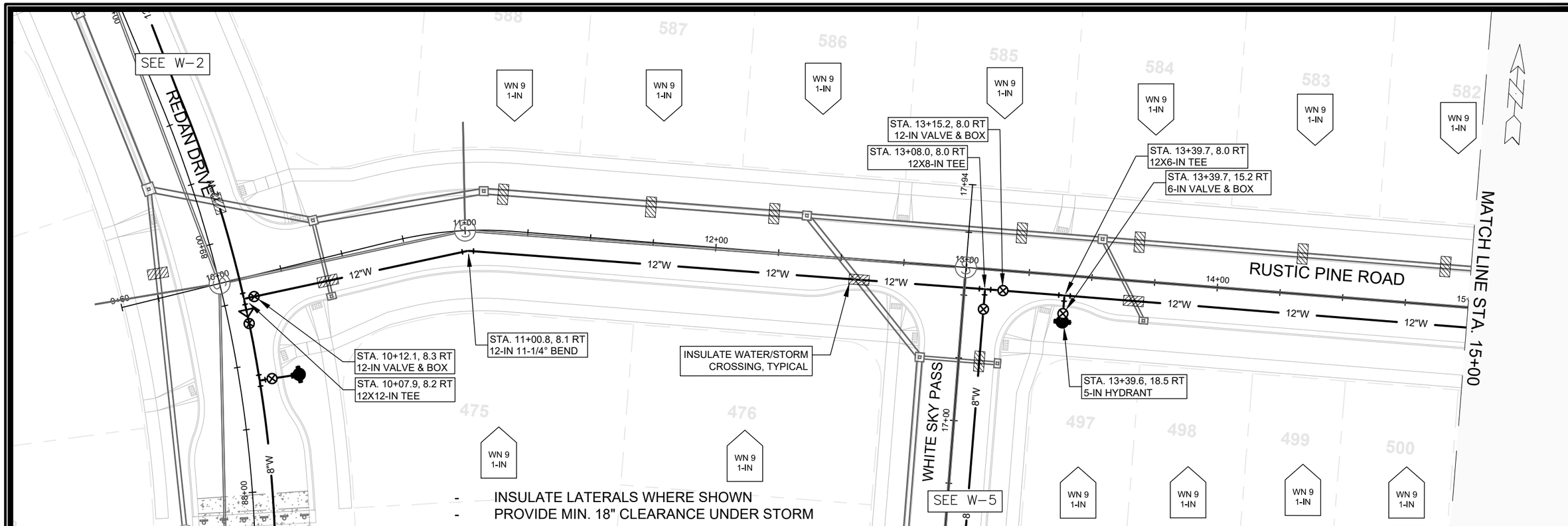

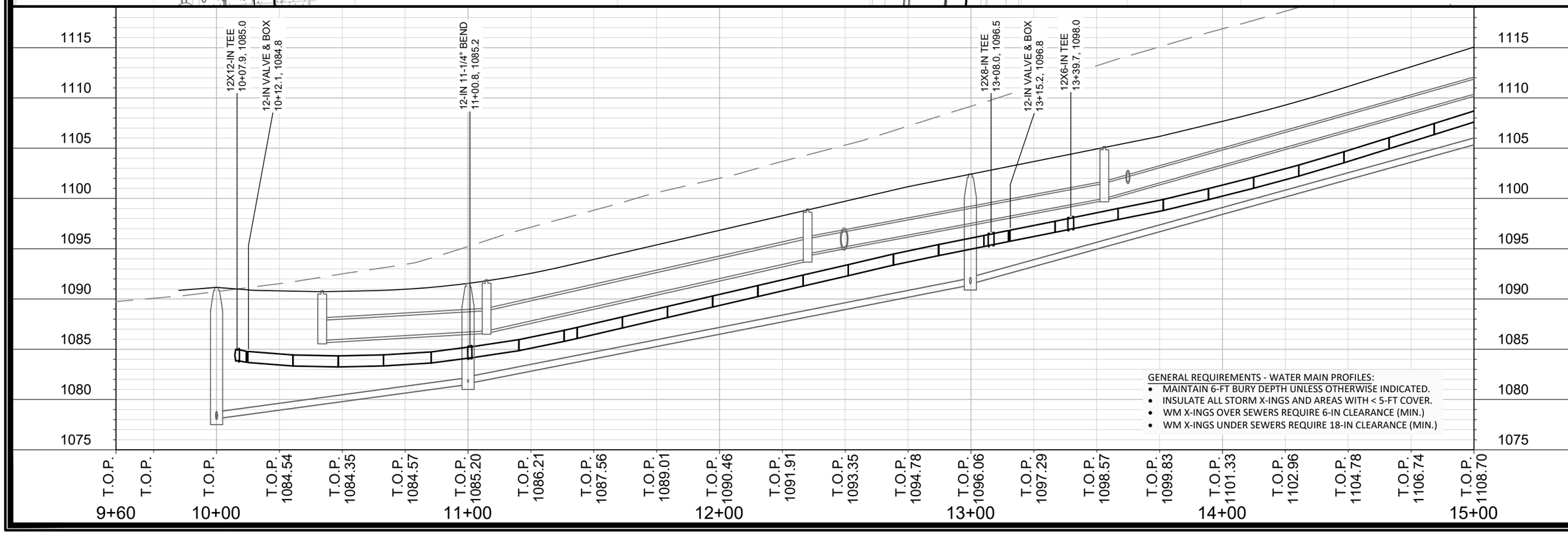

SCALE: 1" = 40'
DESIGNED BY: NGM
MADISON WATER UTILITY
119 E OLIN AVE, MADISON, WI 53713
PRINTING DATE: 2/14/23

CONTRACT NO: 9215

ACACIA RIDGE - PHASE 8

WATER PLAN AND PROFILE - RUSTIC PINE ROAD

CITY OF MADISON, WISCONSIN

14342

W-3

- INSULATE LATERALS WHERE SHOWN
- PROVIDE MIN. 18" CLEARANCE UNDER STORM

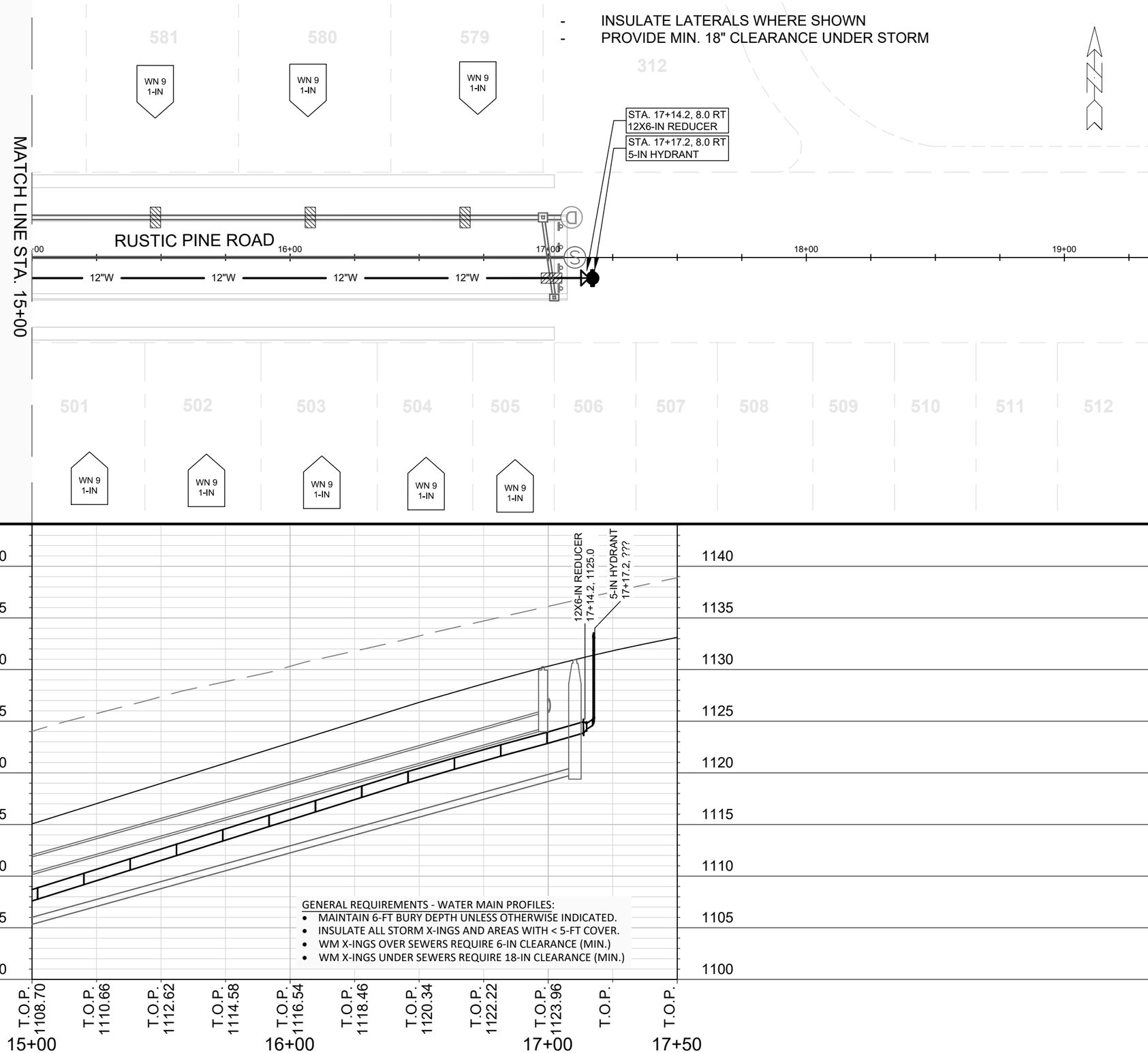

GENERAL REQUIREMENTS - WATER MAIN PROFILES:

- MAINTAIN 6-FT BURY DEPTH UNLESS OTHERWISE INDICATED.
- INSULATE ALL STORM X-INGS AND AREAS WITH < 5-FT COVER.
- WM X-INGS OVER SEWERS REQUIRE 6-IN CLEARANCE (MIN.)
- WM X-INGS UNDER SEWERS REQUIRE 18-IN CLEARANCE (MIN.)

SCALE: 1" = 40'
DESIGNED BY: NGM
MADISON WATER UTILITY
119 E OLIN AVE, MADISON, WI 53713
PRINTING DATE:2/14/23

CONTRACT NO: 9215

ACACIA RIDGE - PHASE 8

WATER PLAN AND PROFILE - RUSTIC PINE ROAD

CITY OF MADISON, WISCONSIN

14342

W-4

- INSULATE LATERALS WHERE SHOWN
- PROVIDE MIN. 18" CLEARANCE UNDER STORM

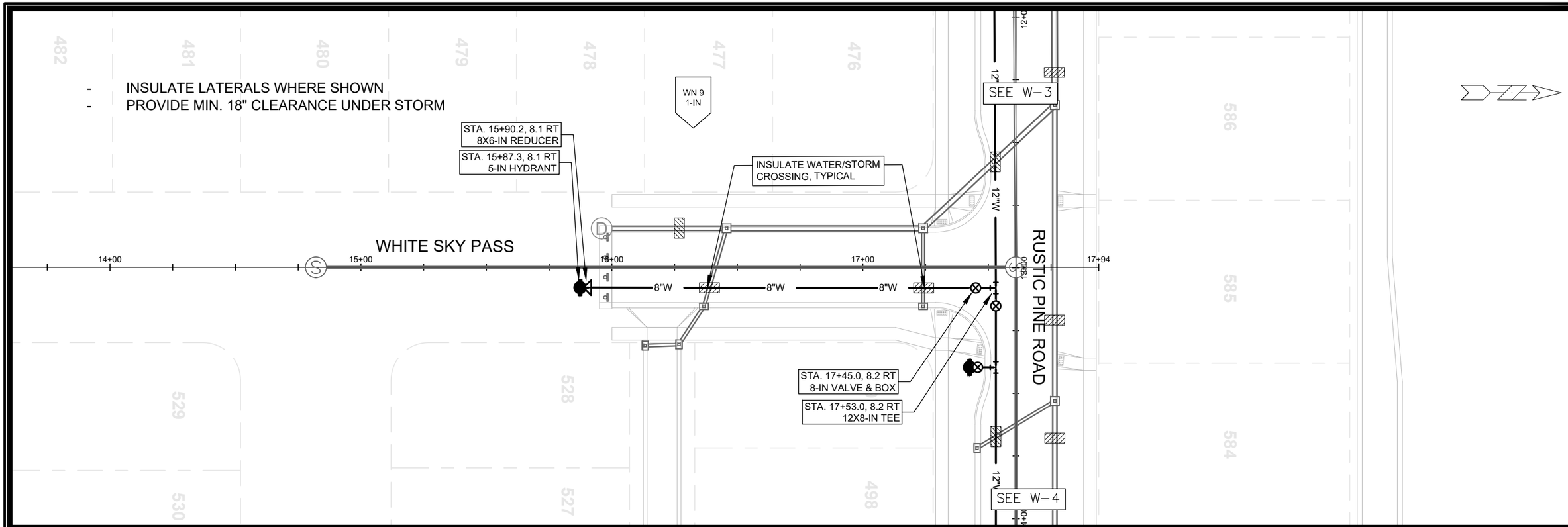

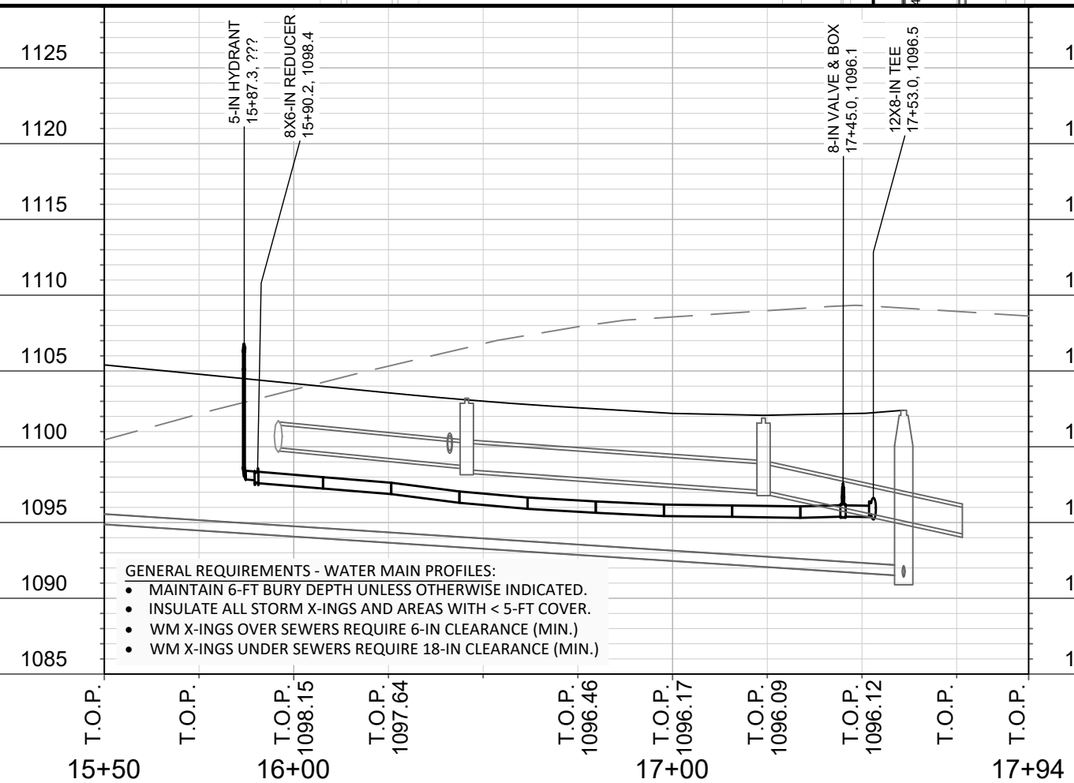

GENERAL REQUIREMENTS - WATER MAIN PROFILES:

- MAINTAIN 6-FT BURY DEPTH UNLESS OTHERWISE INDICATED.
- INSULATE ALL STORM X-INGS AND AREAS WITH < 5-FT COVER.
- WM X-INGS OVER SEWERS REQUIRE 6-IN CLEARANCE (MIN.)
- WM X-INGS UNDER SEWERS REQUIRE 18-IN CLEARANCE (MIN.)

SCALE: 1" = 40'
DESIGNED BY: NGM
MADISON WATER UTILITY
119 E OLIN AVE, MADISON, WI 53713
PRINTING DATE: 2/14/23

CONTRACT NO: 9215

ACACIA RIDGE - PHASE 8

WATER PLAN AND PROFILE - WHITE SKY PASS

CITY OF MADISON, WISCONSIN

14342

W-5

Madison Water Utility

CONSTRUCTION NOTES:

1. CONSTRUCT NEW WATER MAIN 6.0' BELOW FINISHED GRADE, UNLESS OTHERWISE NOTED. INSULATE MAIN WITH POLYSTYRENE BOARD AT UTILITY CROSSINGS OR OTHER AREAS IDENTIFIED BY ENGINEER AS HAVING INADEQUATE COVER.
2. VERIFY SIZE OF EXISTING WATER SERVICES AND RECONNECT SERVICES AS INDICATED.
3. MINIMIZE DISRUPTION OF SERVICE TO CUSTOMERS. NOTIFY PER CONTRACT REQUIREMENTS OF ANY PLANNED WATER OUTAGE.

WATER UTILITY ULO SCHEDULE

WN1	REPLACE THE EXISTING LEAD SERVICE WITH A NEW COPPER SERVICE.
WN-2	EXTEND AND RECONNECT THE EXISTING COPPER SERVICE TO THE NEW WATER MAIN.
WN-3	EXISTING SERVICE TO BE ABANDONED WHEN THE WATER MAIN IS CUT OFF.
WN-4	DISCONNECT FROM THE OLD WATER MAIN AND RECONNECT THE EXISTING COPPER WATER SERVICE LATERAL TO THE NEW WATER MAIN.
WN-5	RELOCATE THE EXISTING FIRE HYDRANT.
WN-6	ABANDON WATER VALVE ACCESS STRUCTURE.
WN-7	FURNISH AND INSTALL THE NEW TOP SECTION FOR THE WATER ACCESS STRUCTURE.
WN-8	ABANDON THE VALVE BOX.
WN-9	FURNISH THE DITCH, COMPACTION, AND ALL MATERIALS AND LABOR FOR THE INSTALLATION OF NEW SERVICE LATERAL.
WN-10	REMOVE AND SALVAGE EXISTING HYDRANT
WN-11	REPLACE THE EXISTING COPPER SERVICE WITH A COPPER SERVICE
WN-20+	SEE WATER IMPACT PLAN FOR CONNECTION POINT ISOLATION AND WATER SHUT-OFF NOTIFICATION INFORMATION.

*ESTIMATE OF MATERIALS SUPPLIED BY CONTRACTOR:

PAY_ITEM_ID	DESCRIPTION	QUANTITY	UNIT
70002	FURNISH AND INSTALL 6-INCH PIPE & FITTINGS	47	LNFT
70003	FURNISH AND INSTALL 8-INCH PIPE & FITTINGS	393	LNFT
70005	FURNISH AND INSTALL 12-INCH PIPE & FITTINGS	1230	LNFT
70031	FURNISH AND INSTALL 6-INCH WATER VALVE	3	EACH
70032	FURNISH AND INSTALL 8-INCH WATER VALVE	3	EACH
70034	FURNISH AND INSTALL 12-INCH WATER VALVE	4	EACH
70040	FURNISH INSTALL AND SALVAGE HYDRANT	4	EACH
70050	FURNISH AND INSTALL 1-INCH SERVICE LATERALS	30	EACH
70101	FURNISH AND INSTALL STYROFOAM	22	EACH
71125	12-IN 45° BEND	4	EACH
71149	12-IN 11-1/4° BEND	1	EACH
71159	8X6-IN REDUCER	2	EACH
71164	12X6-IN REDUCER	1	EACH
71165	12X8-IN REDUCER	2	EACH
71210	8X6-IN TEE	1	EACH
71217	12X6-IN TEE	2	EACH
71218	12X8-IN TEE	1	EACH
71220	12X12-IN TEE	2	EACH

*ESTIMATE OF MATERIALS SUPPLIED BY WATER UTILITY:

N/A

*ESTIMATE OF MATERIALS SALVAGED:

RELOCATED HYDRANT	2	EACH
12-IN MJ PLUG	1	EACH
RELOCATED 12X6-IN TEE	1	EACH

* ESTIMATE OF MATERIALS IS FOR INFORMATION ONLY. ENGINEER DOES NOT GUARANTEE ACCURACY OF MATERIAL TAKE-OFF.

TO OBTAIN LOCATION OF PARTICIPANTS' UNDERGROUND FACILITIES BEFORE YOU DIG IN WISCONSIN

CALL DIGGERS HOTLINE
TOLL FREE
811 OR 1-800-242-8511
FAX-A-LOCATE 1-800-338-3860
TDD (FOR HEARING IMPAIRED) 1-800-542-2289

WIS. STATUTE 182.0175 (1974) REQUIRES MIN. OF 3 WORK DAYS NOTICE BEFORE YOU EXCAVATE.

MEMBER ONE CALL SYSTEMS INTERNATIONAL

DISCLAIMER NOTE: UTILITY LOCATIONS SHOWN ARE APPROXIMATE ONLY. IT SHALL BE THE CONTRACTOR'S RESPONSIBILITY TO DETERMINE THE EXACT HORIZONTAL AND VERTICAL LOCATION OF ALL EXISTING UNDERGROUND AND OVERHEAD UTILITIES PRIOR TO COMMENCING WORK.

PART VII - WATER MAINS AND SERVICE LATERALS

DETAIL DRAWING NO. **7.04**

REVISED: 11/2022

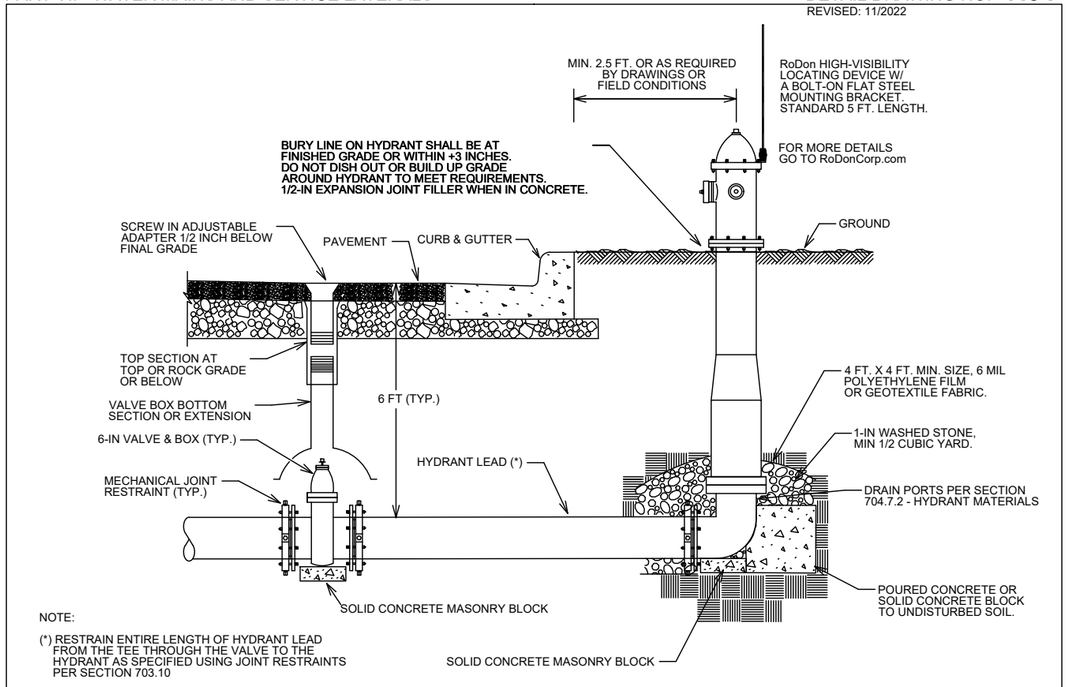

NOTE:

(*) RESTRAIN ENTIRE LENGTH OF HYDRANT LEAD FROM THE TEE THROUGH THE VALVE TO THE HYDRANT AS SPECIFIED USING JOINT RESTRAINTS PER SECTION 703.10

CITY OF MADISON WATER UTILITY	NOT TO SCALE	TYPICAL HYDRANT INSTALLATION

SCALE: ########
DESIGNED BY: NGM
MADISON WATER UTILITY
119 E OLIN AVE, MADISON, WI 53713
PRINTING DATE:2/9/23

CONTRACT NO: 9215

ACACIA RIDGE - PHASE 8
WATER ESTIMATE OF MATERIALS
CITY OF MADISON, WISCONSIN

14342
W-6

M:\DESIGN\PROJECTS\14342\CAD\WATER\14342\WU MATERIALS.DWG

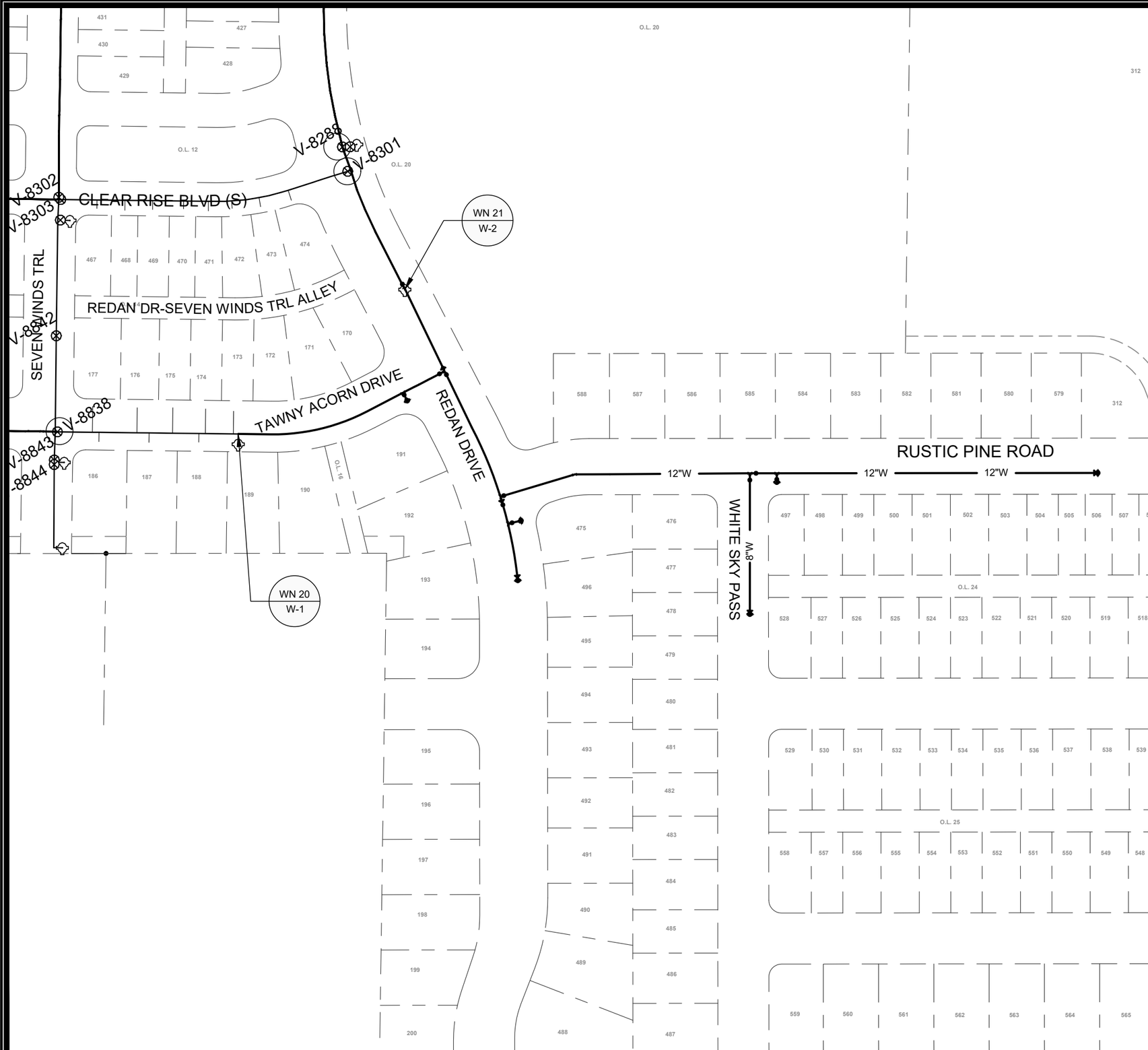

1" = 120'

Madison Water Utility

WN20: CUT-IN CONNECTION
TAWNY ACORN DRIVE

ISOLATION VALVES:
- V-8838 (12-IN)

WN21: CUT-IN CONNECTION
REDAN DRIVE

ISOLATION VALVES:
- V-8301 (8-IN)
- V-8288 (8-IN)

DISCLAIMER NOTE:
THE WATER IMPACT PLAN IS PROVIDED FOR REFERENCE PURPOSES TO AID PLANNING CONNECTION POINT ISOLATION AND PREPARING NOTIFICATION LISTS DURING PLANNED OUTAGES. REQUEST ANY ALTERNATIVE CONNECTION METHODS IN WRITING, PER SPECS.

SCALE: 1" = 120'
DESIGNED BY: NGM
MADISON WATER UTILITY
119 E OLIN AVE, MADISON, WI 53713
PRINTING DATE:4/26/23

CONTRACT NO: 9215

ACACIA RIDGE - PHASE 8

WATER IMPACT PLAN

CITY OF MADISON, WISCONSIN

14342

W-7

M:\DESIGN\PROJECTS\14342\CAD\WATER\14342WU-IMPACTPLAN.DWG

88+50.00

89+25.00

88+25.00

89+00.00

88+00.00

88+75.00

MARK	REVISION	DATE	BY
---	---	---	---
---	---	---	---
---	---	---	---
---	---	---	---

Designed By: IO | Date: 2/21/2023 9:12 AM | Scale: ########

14342

MADISON, WI

CONTRACT NO: 9215

CROSS SECTIONS - REDAN DRIVE

ACACIA RIDGE - PHASE 8

M:\DESIGN\Projects\14342\CAD\Streets\14342EN-Xsections.dwg

14342

X-1

90+00.00

90+75.00

89+75.00

90+50.00

89+50.00

90+25.00

MARK	REVISION	DATE	BY
---	---	---	---
---	---	---	---
---	---	---	---
---	---	---	---

Designed By: IO
Date: 2/21/2023 9:12 AM
Scale: ########

14342

MADISON, WI

CONTRACT NO: 9215

CROSS SECTIONS - REDAN DRIVE

ACACIA RIDGE - PHASE 8

M:\DESIGN\Projects\14342\CAD\Streets\14342EN-Xsections.dwg

14342

X-2

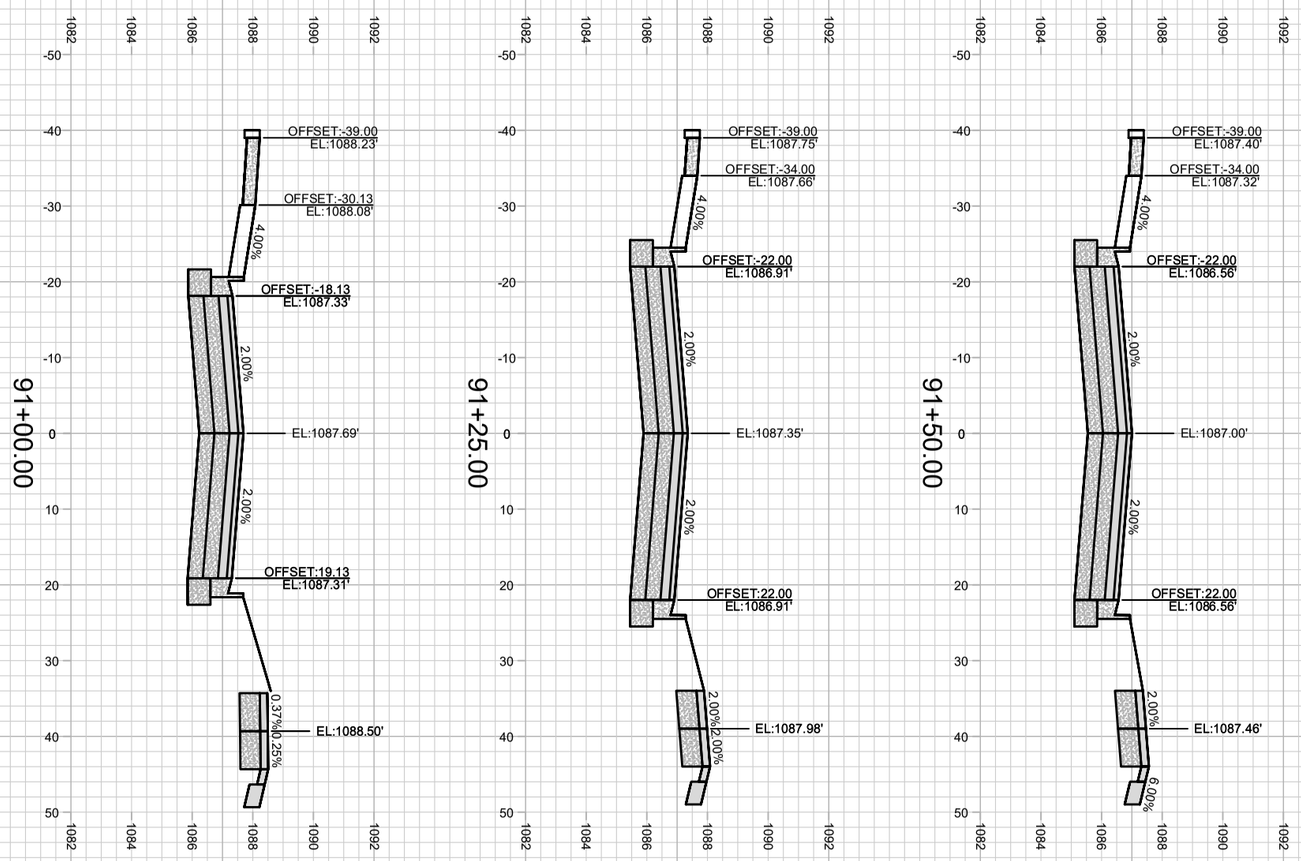

X-3

14342

CROSS SECTIONS - REDAN DRIVE 14342

ACACIA RIDGE - PHASE 8 MADISON, WI

M:\DESIGN\Projects\14342\CAD\Streets\14342EN-Xsections.dwg CONTRACT NO: 9215

MARK	REVISION	DATE	BY
---	---	---	---
---	---	---	---
---	---	---	---
---	---	---	---

Designed By: IO | Date: 2/21/2023 9:12 AM | Scale: ########

14342 X-3

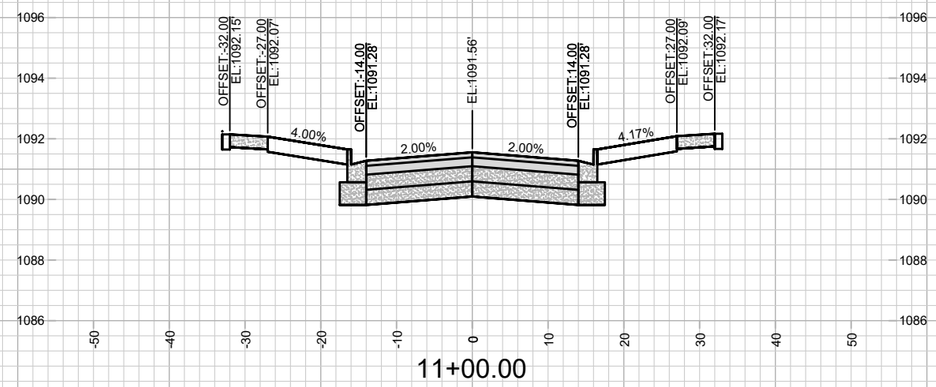

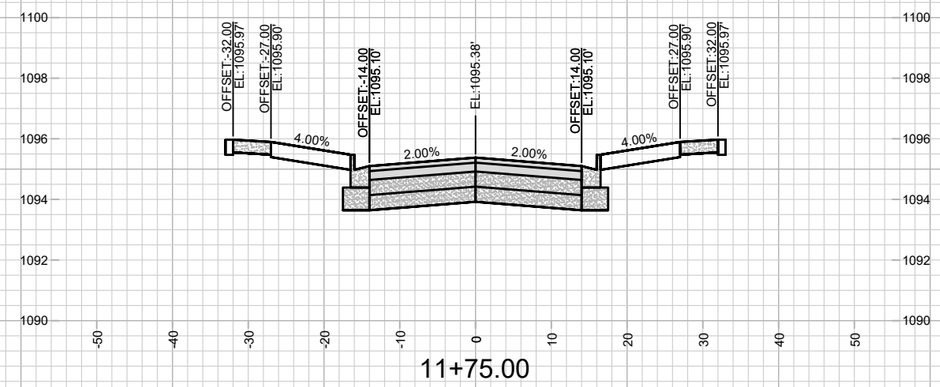

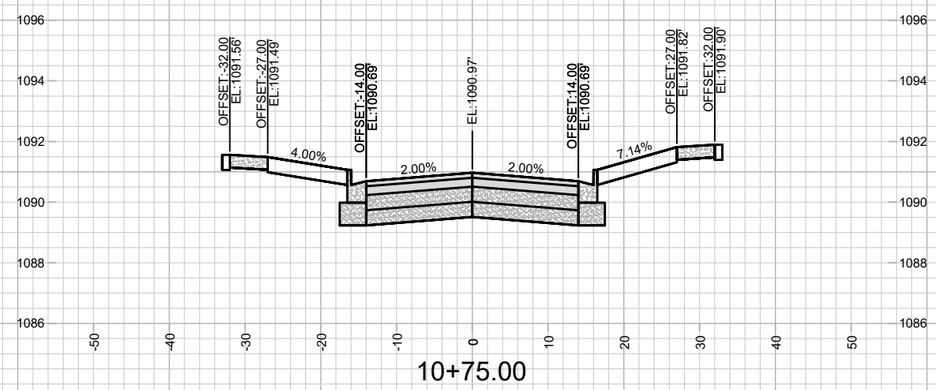

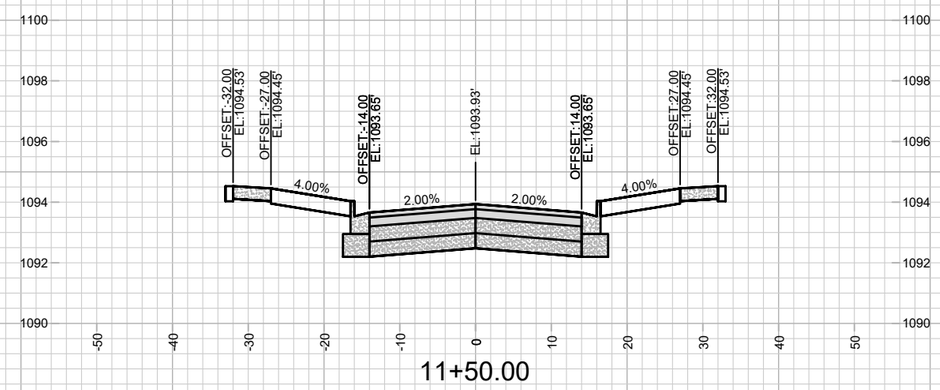

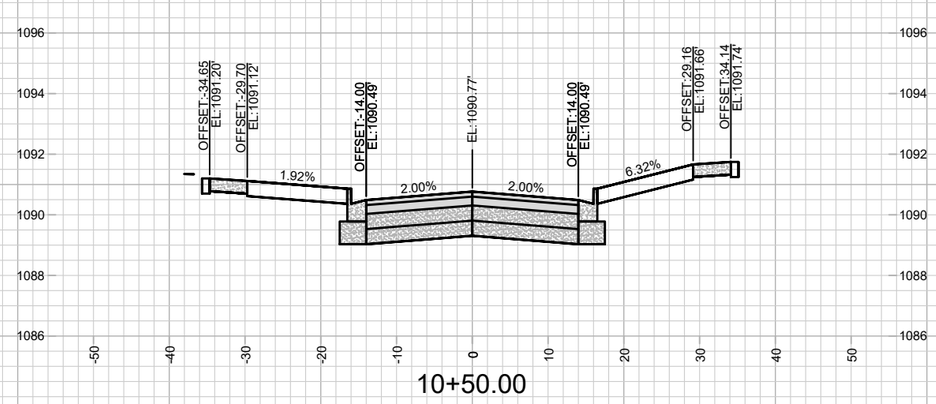

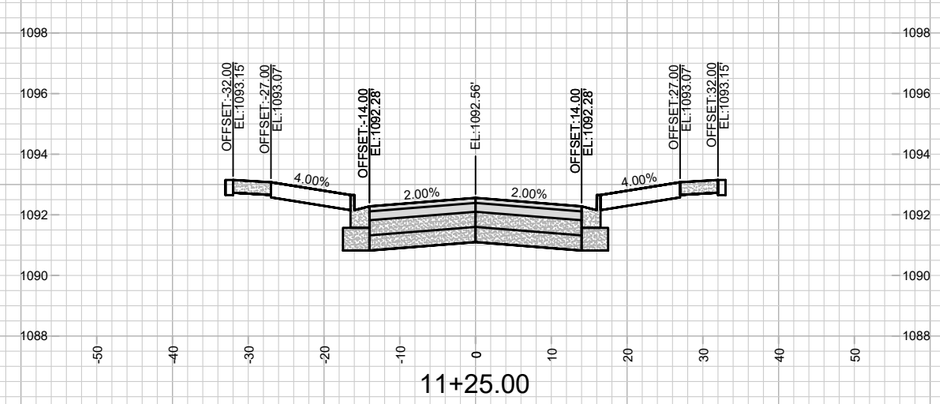

MARK	REVISION	DATE	BY
---	---	---	---
---	---	---	---
---	---	---	---
---	---	---	---

Designed By: IO | Date: 2/21/2023 9:12 AM | Scale: ########

14342

MADISON, WI

CONTRACT NO: 9215

CROSS SECTIONS - RUSTIC PINE ROAD

ACACIA RIDGE - PHASE 8

M:\DESIGN\Projects\14342\CAD\Streets\14342EN-Xsections.dwg

14342

X-4

12+50.00

13+25.00

12+25.00

13+00.00

12+00.00

12+75.00

MARK	REVISION	DATE	BY
---	---	---	---
---	---	---	---
---	---	---	---
---	---	---	---

Designed By: IO
Date: 2/21/2023 9:12 AM
Scale: ########

14342

MADISON, WI

CONTRACT NO: 9215

14342

X-5

CROSS SECTIONS - RUSTIC PINE ROAD

ACACIA RIDGE - PHASE 8

M:\DESIGN\Projects\14342\CAD\Streets\14342EN-Xsections.dwg

14342

X-5

14+00.00

14+75.00

13+75.00

14+50.00

13+50.00

14+25.00

MARK	REVISION	DATE	BY
---	---	---	---
---	---	---	---
---	---	---	---
---	---	---	---

Designed By: IO | Date: 2/21/2023 9:12 AM | Scale: ########

14342

14342

MADISON, WI

9215

CONTRACT NO:

CROSS SECTIONS - RUSTIC PINE ROAD

ACACIA RIDGE - PHASE 8

M:\DESIGN\Projects\14342\CAD\Streets\14342EN-Xsections.dwg

14342

X-6

X-6

15+50.00

16+25.00

15+25.00

16+00.00

15+00.00

15+75.00

MARK	REVISION	DATE	BY
---	---	---	---
---	---	---	---
---	---	---	---
---	---	---	---

Designed By: IO
Date: 2/21/2023 9:12 AM
Scale: ########

14342

MADISON, WI

CONTRACT NO: 9215

CROSS SECTIONS - RUSTIC PINE ROAD

ACACIA RIDGE - PHASE 8

M:\DESIGN\Projects\14342\CAD\Streets\14342EN-Xsections.dwg

14342

X-7

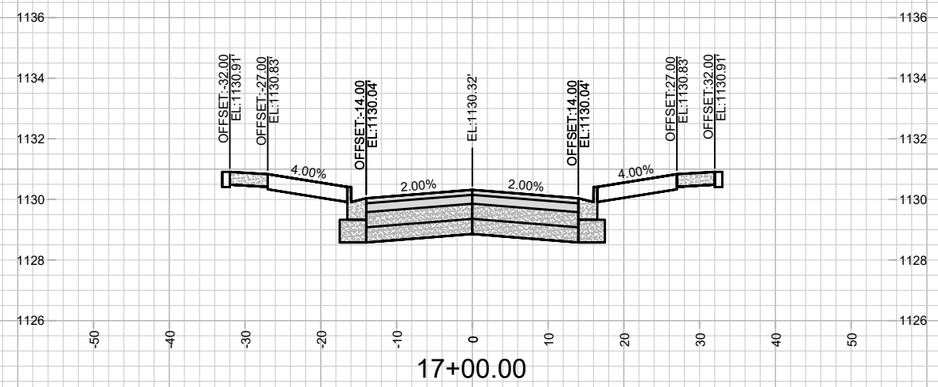

17+00.00

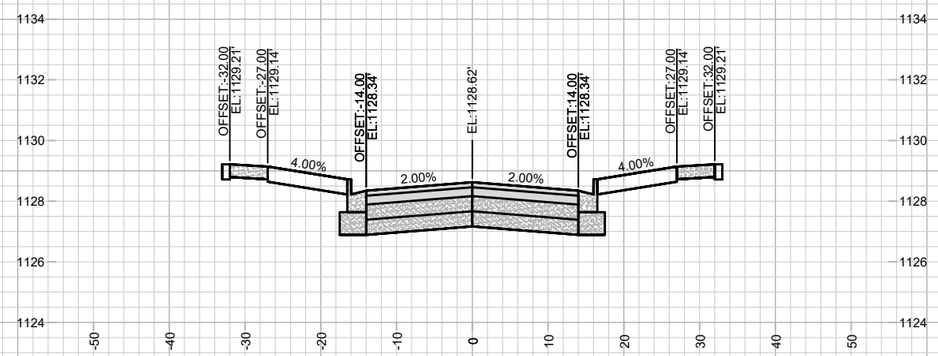

16+75.00

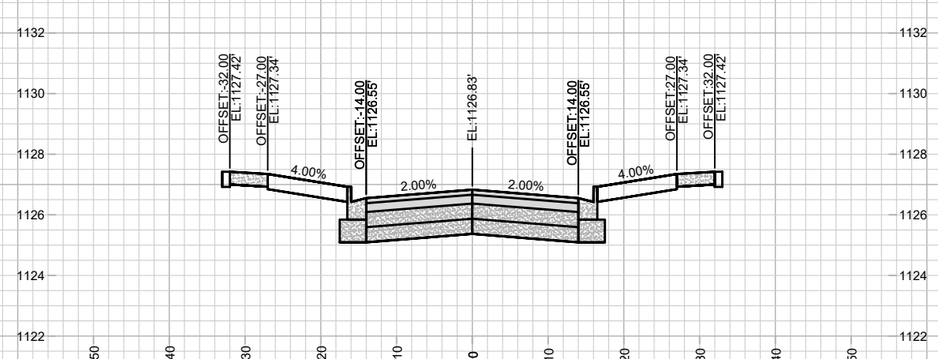

16+50.00

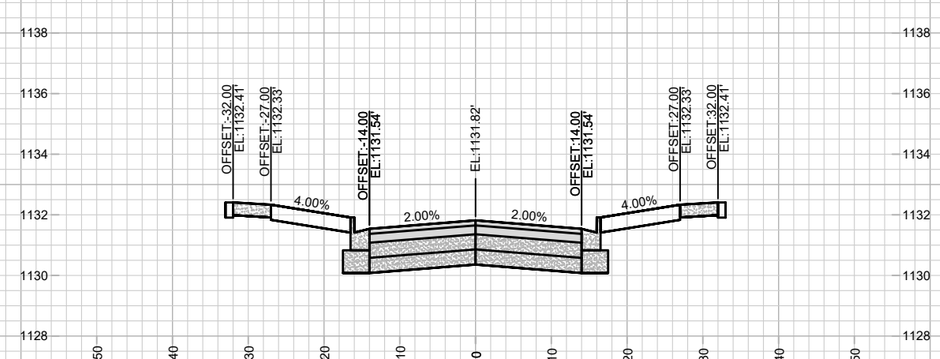

17+25.00

MARK	REVISION	DATE	BY
---	---	---	---
---	---	---	---
---	---	---	---
---	---	---	---

Designed By: IO
Date: 2/21/2023 9:12 AM
Scale: ########

14342

CROSS SECTIONS - RUSTIC PINE ROAD

ACACIA RIDGE - PHASE 8

M:\DESIGN\Projects\14342\CAD\Streets\14342EN-Xsections.dwg

MADISON, WI

CONTRACT NO: 9215

14342

X-8

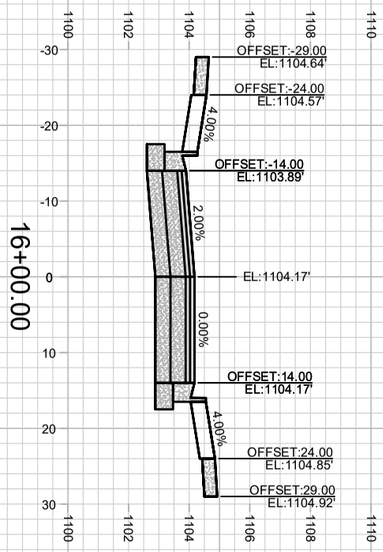

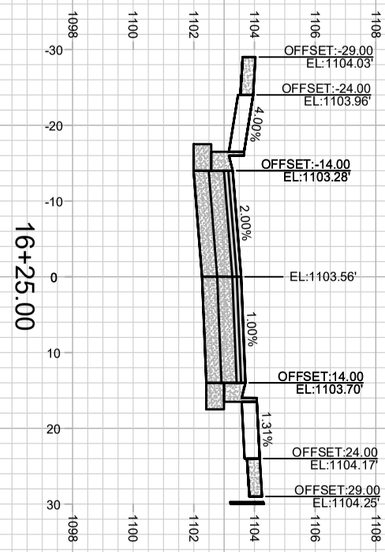

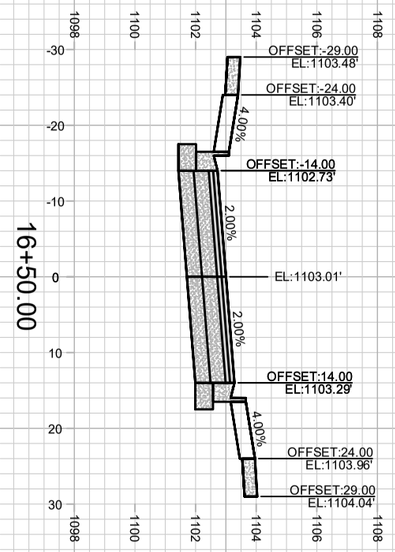

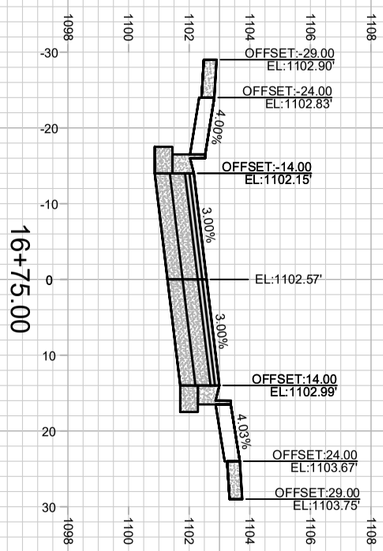

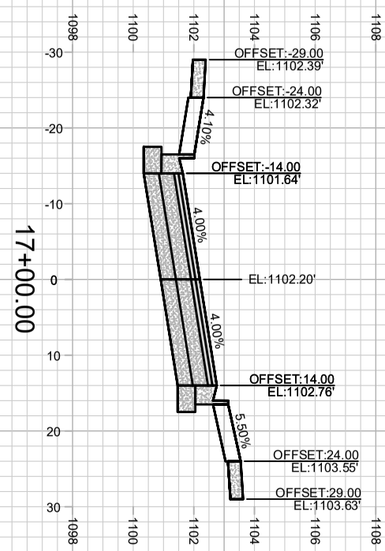

X-9

14342

CROSS SECTIONS - WHITE SKY PASS 14342

ACACIA RIDGE - PHASE 8 MADISON, WI

M:\DESIGN\Projects\14342\CAD\Streets\14342EN-Xsections.dwg CONTRACT NO: 9215

MARK	REVISION	DATE	BY
---	---	---	---
---	---	---	---
---	---	---	---
---	---	---	---

Designed By: IO | Date: 2/21/2023 9:13 AM | Scale: ########

14342 X-9

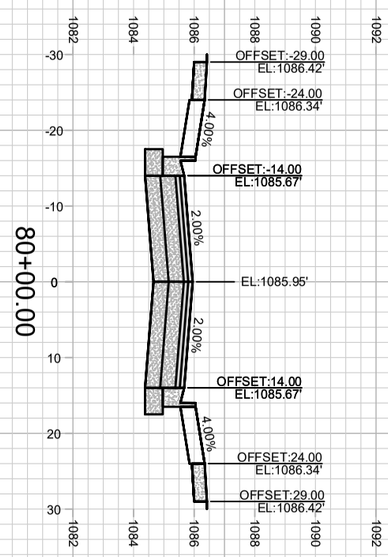

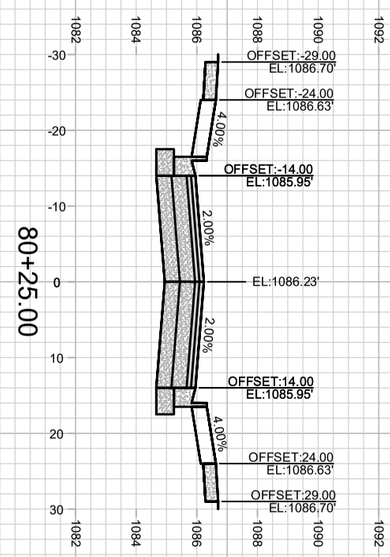

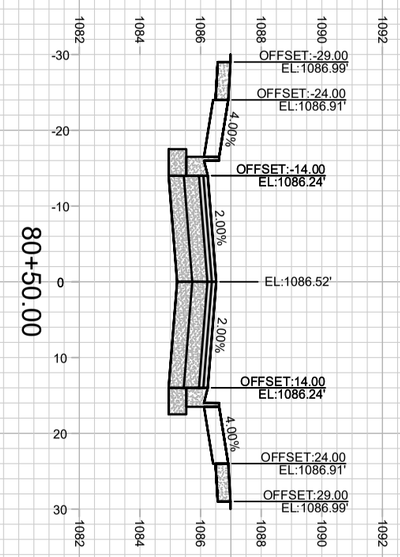

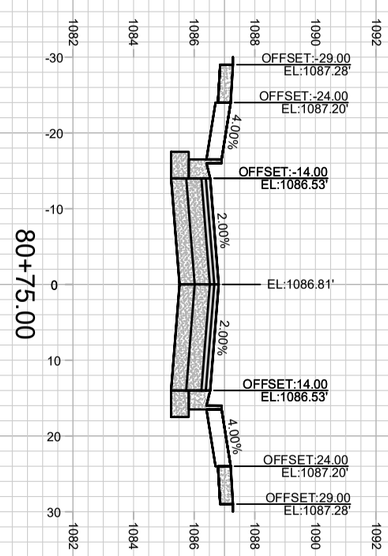

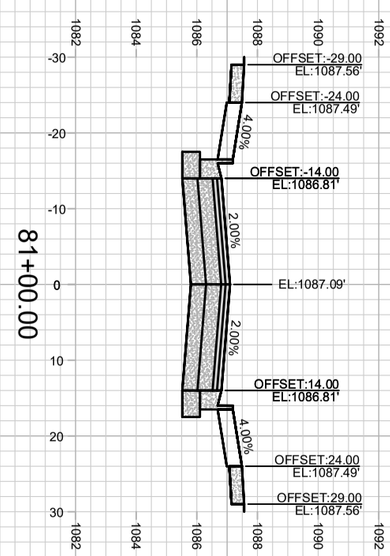

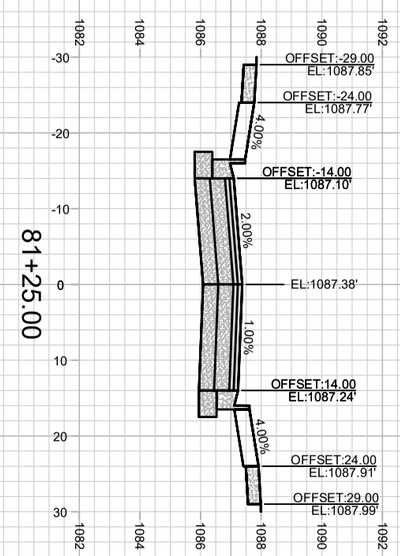

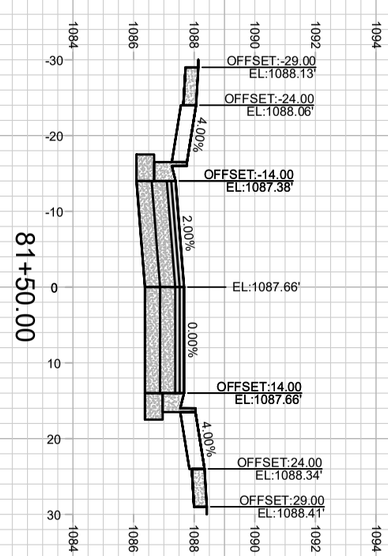

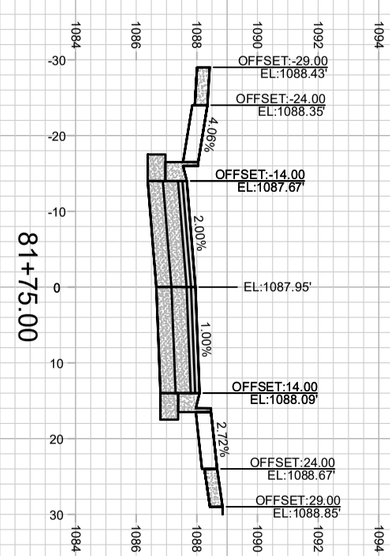

X-10

14342

CROSS SECTIONS - TAWNY ACORN DRIVE 14342

ACACIA RIDGE - PHASE 8 MADISON, WI

M:\DESIGN\Projects\14342\CAD\Streets\14342EN-Xsections.dwg CONTRACT NO: 9215

MARK	REVISION	DATE	BY
---	---	---	---
---	---	---	---
---	---	---	---
---	---	---	---

Designed By: IO | Date: 2/21/2023 9:13 AM | Scale: ########

14342 | X-10

OUTLOT 20
DEDICATED TO THE PUBLIC FOR
PARK PURPOSES

ENGINEERING DIVISION
PATH

REDAN DR

TAWNY ACORN DR

RUSTIC PINE RD

LONE OAK LN

WHITE SKY PASS

LOST DEER RUN

HONEY HARVEST LN

LOT 4
CSM 1338

MAINTENANCE LEGEND:

- = TERRACE REQUIRE MOWING BY CITY
- = SIDEWALK AND BIKE PATHS REQUIRE SNOW REMOVAL BY CITY
- = BUS STOP PAD REQUIRES SNOW REMOVAL BY CITY
- =CROSSWALK OR CONCRETE WATERWAY REQUIRE SNOW REMOVAL BY CITY)
- = PRIVATELY MAINTAINED (MEDIANS, ISLAND, ROUNDABOUTS & PRIVATE OUTLOTS)
- = PUBLIC CITY ENGINEERING STORMWATER PROPERTY
- = PUBLIC CITY PARK PROPERTY
- = PRIVATE OUTLOT
- = PHASE BOUNDARY

SPECIAL FEATURES LEGEND:

- = SUSPENDED PAVEMENT SYSTEM
- = STORM WATER FEATURE
- = UNDERDRAIN

NOT FOR CONSTRUCTION - CITY RECORDS ONLY

MARK	REVISION	DATE	BY
---	---	---	---
---	---	---	---
---	---	---	---
---	---	---	---

Designed By: IO
Date: 4/26/2023 12:49 PM
Scale: ##########

14342

MADISON, WI

CONTRACT NO: 9215

MAINTENANCE PLAN
ACACIA RIDGE - PHASE 8

M:\DESIGN\Projects\14342\CAD\Streets\14342EN-Maintenance.dwg

14342
MN-1