CITY OF MADISON

CITY ENGINEERING DIVISION
DEPARTMENT OF PUBLIC WORKS
PLAN OF PROPOSED IMPROVEMENT

Madison, Wisconsin

PUBLIC IMPROVEMENT PROJECT APPROVED

APPROVED DATE: JANUARY 3,2023

BY THE COMMON COUNCIL OF MADISON, WISCONSIN

PUBLIC IMPROVEMENT DESIGN APPROVED BY:

Oct 16, 2023

City Engineer — Date

FIRST ADDITION TO 1000 OAKS PHASE 11

CITY PROJECT NO. 14344
CONTRACT NO. 9219

INDEX OF SHEETS

SHEET NO.	D 1	STANDARD NOTES
SHEET NO.	D 2 - D4	TYPICAL SECTIONS
SHEET NO.	M 1 - M 2	MARKING PLAN
SHEET NO.	O 1	OVERVIEW PLAN
SHEET NO.	P 1 - P 4	PLAN & PROFILE
SHEET NO.	U 1 - U 2	UTILITIES PLAN & PROFILE
SHEET NO.	U 1	SANITARY & STORM SEWER SCHEDULE
SHEET NO.	W1 - W2	WATER MAIN PLAN & PROFILE
SHEET NO.	W 3	WATER IMPACT PLAN
SHEET NO.	W 4	WATER ESTIMATE OF MATERIALS
SHEET NO.	X 1 - X 10	CROSS SECTIONS
SHEET NO.	MN 1	MAINTENANCE PLAN

PROJECT LOCATION

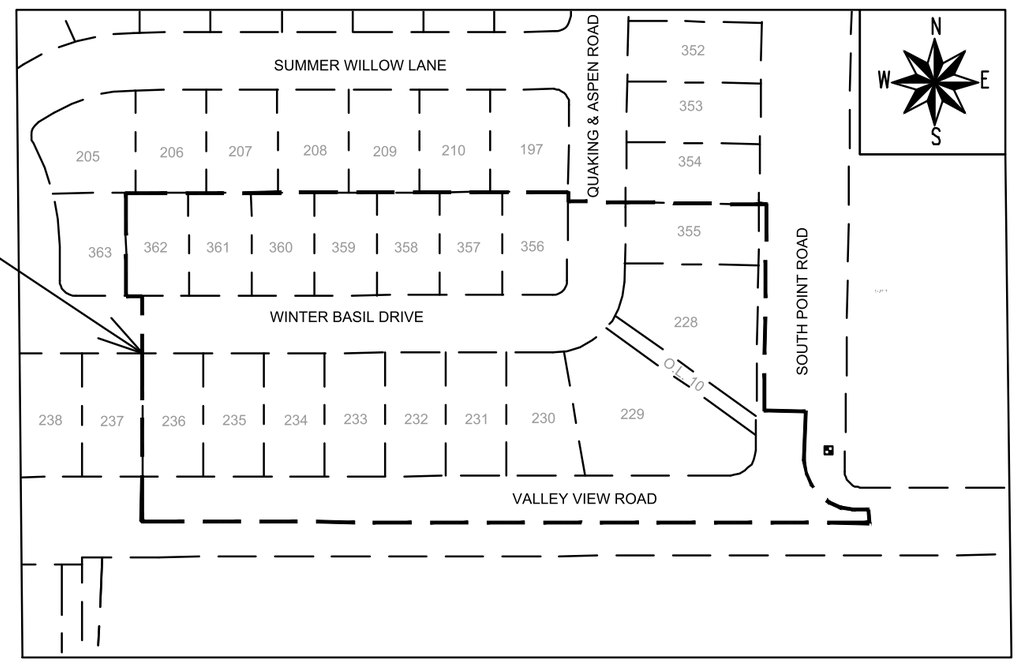

MARKINGS DESIGNED BY:
WISCONSIN — SEAN D MALLOY E-48326 MADISON WI — PROFESSIONAL ENGINEER
Oct 16, 2023

STREET DESIGNED BY:
WISCONSIN — FADI B EL MUSA GONZALEZ E-47872 MADISON WI — PROFESSIONAL ENGINEER
Oct 16, 2023

STORM SEWER DESIGNED BY:
WISCONSIN — JANET SCHMIDT E-34681 MADISON WI — PROFESSIONAL ENGINEER
Oct 16, 2023

SANITARY SEWER DESIGNED BY:
WISCONSIN — MARK D. MODER E-33979 MADISON WI — PROFESSIONAL ENGINEER
Oct 16, 2023

GEOMETRY DESIGNED BY:
WISCONSIN — SEAN D MALLOY E-48326 MADISON WI — PROFESSIONAL ENGINEER
Oct 16, 2023

WATER MAIN DESIGNED BY:
WISCONSIN — ADAM R. WIEDERHOEFT E-41559 MADISON WI — PROFESSIONAL ENGINEER
Oct 16, 2023

PLOT SCALE: 1:0" = 1:0" XREF
PLOT NAME: ---
REV. DATE: 9/28/2023 9:35 AM
ORIGINATOR: CITY OF MADISON

FILE NAME: M:\DESIGN\Projects\14344\CAD\Streets\14344EN-TitleSheet.dwg
DATE: 9/28/2023 9:30 AM

NO TREES IN THE RIGHT OF WAY OR ON PUBLIC LANDS SHALL BE TRIMMED, PRUNED, REMOVED OR ADVERSELY AFFECTED IN ANY WAY UNTIL THE DEVELOPER HAS RECEIVED WRITTEN PERMISSION FROM THE CITY ENGINEER OR CITY FORESTER. SAID WRITTEN PERMISSION SHALL INCLUDE LANGUAGE INDICATING THAT SECTION 10.101 OF THE MADISON GENERAL ORDINANCES AND ADMINISTRATIVE PROCEDURE MEMORANDUM NO. 6-2, REFERRING TO NOTIFICATION OF PROPERTY OCCUPANTS AND/OR OWNERS, HAS BEEN COMPLIED WITH.

DEVELOPER MUST SUBMIT A TRAFFIC CONTROL PLAN TO CITY TRAFFIC ENGINEERING AT LEAST 14 DAYS PRIOR TO THE START OF WORK. WORK SHALL NOT PROCEED UNTIL AN APPROVED TRAFFIC CONTROL PLAN IS IN PLACE.

CONTACT THE PROJECT ENGINEER AND DESIGNER, FADI EL MUSA GONZALEZ, AT FELMUSAGONZALEZ@CITYOFMADISON.COM FOR CAD FILES AND ALIGNMENT DATA PRIOR TO STAKING.

CONVENTIONAL SIGNS
FIELD VERIFY ALL UTILITY LOCATIONS

GAS	G
STORM SEWER	ST
SANITARY SEWER	SAN
WATER	W
BURIED ELECTRIC	E
OVERHEAD ELECTRIC	OH
POWER POLE	
ADA COMPLIANT RAMP W/ DETECTABLE WARNING FIELD	
COMBUSTIBLE FLUIDS	CAUTION

ALL PAVEMENT IN THE WINTER BASIL DRIVE AND QUAKING ASPEN ROAD RIGHTS-OF-WAY SHALL BE TYPE A PAVEMENT PER STANDARD DETAIL DRAWING 4.02.

ALL PAVEMENT IN THE VALLEY VIEW ROAD AND SOUTH POINT ROAD RIGHTS-OF-WAY SHALL BE TYPE C PAVEMENT PER STANDARD DETAIL DRAWING 4.02.

UNDERDRAINS SHALL BE INSTALLED PER STANDARD DETAIL DRAWING 4.05 FOR 75' ON EACH SIDE OF THE LOW POINT, OR TO THE NEAREST CURB HIGH POINT. ALL UNDERDRAIN SHALL BE WRAPPED.

ALL GUTTERS SHALL DRAIN WITH A MINIMUM GRADE OF 0.5% TOWARD STORM SEWER INLETS.

ALL DITCHES SHALL DRAIN WITH A MINIMUM GRADE OF 0.5%

THE CROSS SLOPE OF SIDEWALKS AND BARRIER FREE SIDEWALK CURB RAMPS SHALL TYPICALLY BE 1.5%. THE LONGITUDINAL GRADE OF BARRIER FREE SIDEWALK CURB RAMPS SHALL NOT EXCEED 8.33%. ALL SIDEWALK RAMPS SHALL BE CONSTRUCTED ACCORDING TO S.D.D. 3.04. AT ALL OTHER LOCATIONS THE LONGITUDINAL GRADE OF SIDEWALKS SHALL NOT EXCEED 5.0 % OR THE ADJACENT STREET GRADE WHICHEVER IS GREATER NOR BE LESS THAN 0.5% AND SHALL DRAIN TOWARD STORM SEWER INLETS. SIDE SLOPES WITHIN TEN FEET OF A PUBLIC SIDEWALK SHALL NOT EXCEED 4:1. ALL SIDEWALK AND SIDEWALK RAMP ELEVATIONS AND GRADES SHALL BE FIELD VERIFIED AND SET TO COMPLY WITH THE CITY OF MADISON STANDARD SPECIFICATIONS AND THE A.D.A. GUIDELINES.

CURB STATION AND OFFSETS SHALL BE TO THE EDGE OF PAVEMENT UNLESS OTHERWISE INDICATED. CURB ELEVATIONS SHALL BE TO THE EDGE OF PAVEMENT UNLESS OTHERWISE INDICATED.

POWER POLES AND OTHER OBSTRUCTIONS SHALL BE MOVED TO PROVIDE 2 FEET MINIMUM OF CLEAR DISTANCE FROM ANY FACE OF CURB OR EDGE OF SIDEWALK UNLESS OTHERWISE INDICATED ON THE PLANS.

ANY INFORMATION SHOWN ON THIS PLAN, WHICH IS NOT PART OF THIS RIGHT-OF-WAY PROJECT, IS PRELIMINARY AND NOT FOR CONSTRUCTION.

THERE MAY BE EXISTING UTILITIES OR OTHER FEATURES WHICH ARE EITHER NOT SHOWN OR SHOWN INCORRECTLY ON THIS PLAN. IT IS THE RESPONSIBILITY OF THE DEVELOPER TO LOCATE AND IDENTIFY ALL UTILITIES AND TOPOGRAPHY WHICH MAY AFFECT THE CONSTRUCTION OF THESE IMPROVEMENTS.

ALL PERMANENT SIGNING AND POSTING WILL BE DETERMINED AND PROVIDED BY THE TRAFFIC ENGINEERING DIVISION, FOLLOWING CONSTRUCTION OF THESE IMPROVEMENTS.

THE DEVELOPER SHALL PROVIDE, INSTALL AND MAINTAIN ALL STREET END BARRICADES, SIGNING AND TRAFFIC CONTROL, AS REQUIRED BY THE CITY TRAFFIC ENGINEER.

PAVEMENT SAWCUTS SHALL BE AS DIRECTED BY THE CITY CONSTRUCTION ENGINEER. SAWCUTS SHOWN ON THE PLAN ARE APPROXIMATE.

CURB ON CUL DE SACS SHALL BE INSTALLED ACCORDING TO S.D.D. 3.05.

ALL WORK IN THE RIGHT OF WAY AND PUBLIC EASEMENTS SHALL BE IN ACCORDANCE WITH THE CITY OF MADISON STANDARD SPECIFICATIONS FOR PUBLIC WORKS CONSTRUCTION LATEST EDITION.

ALL PROPOSED IMPROVEMENTS IN THE RIGHT-OF-WAY ARE BASED ON SURVEY DATA PROVIDED BY THE DEVELOPER OR ITS CONSULTANT. IN THE CASE THAT THE PROPOSED IMPROVEMENTS CAN NOT BE INSTALLED PER THESE PLANS OR THE CITY OF MADISON STANDARD SPECIFICATION FOR PUBLIC WORKS CONSTRUCTION, LATEST EDITION, THE DEVELOPER SHALL BE RESPONSIBLE FOR THE COST OF EXTRA WORK DUE TO INACCURACIES OF THE SURVEY.

ALL UTILITY VERIFICATIONS AND ACCURACY OF THE DRAWINGS ARE THE RESPONSIBILITY OF THE DEVELOPER. ANY CONFLICTS THAT ARISE FROM MISSING OR ERRONEOUS INFORMATION WILL BE AT THE EXPENSE OF THE DEVELOPER. NO PRECAST STRUCTURES WILL BE APPROVED FOR STORM OR SANITARY SEWER UNTIL ALL POTENTIAL UTILITY CONFLICTS ARE RESOLVED.

MARK	REVISION	DATE	BY
---	---	---	---
---	---	---	---
---	---	---	---
---	---	---	---

Designed By: ### Date: 9/23/2023 10:25 PM Scale:
14344 D-1

14344

MADISON, WI

CONTRACT NO: 9219

STANDARD NOTES

FIRST ADDITION TO 1000 OAKS PHASE 11

M:\DESIGN\Projects\14344\CAD\Streets\14344EN-Details.dwg

14344

D-1

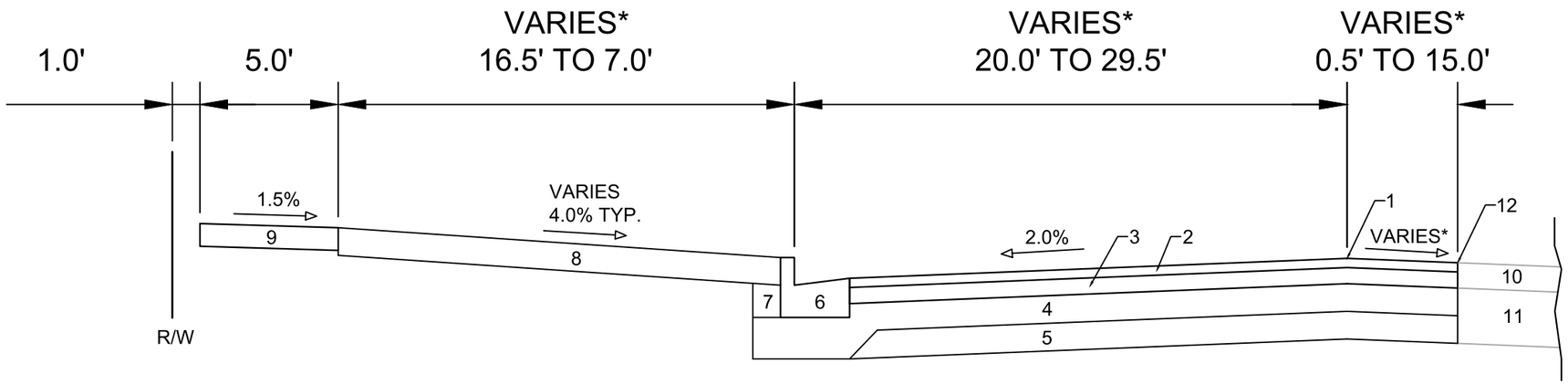

1 POINT REFERRED TO ON PROFILE
2 2.00" H.M.A. PAVEMENT- TYPE 4 MT 58-28 S**
3 3.50" H.M.A. PAVEMENT- TYPE 3 MT 58-28 S
4 6" CRUSHED AGGREGATE BASE COURSE GRADATION 2
5 6" CRUSHED AGGREGATE BASE COURSE GRADATION 1
6 CONCRETE CURB AND GUTTER TYPE 'A'.
7 FILL
8 6" TOPSOIL, SEED AND MATTING
9 5" CONCRETE SIDEWALK
10 EX. PAVEMENT TO REMAIN
11 EX. BASE COURSE TO REMAIN
12 PROPOSED SAWCUT LOCATION

TYPICAL SECTION
VALLEY VIEW RD
STA 113+48.56 TO STA 119+00.00

SPECIAL NOTES:

* SEE P & X SHEETS FOR CROSS SLOPES AND WIDTHS
** SEE SHEET O-1 FOR SURFACE PAVING RESPONSIBILITY

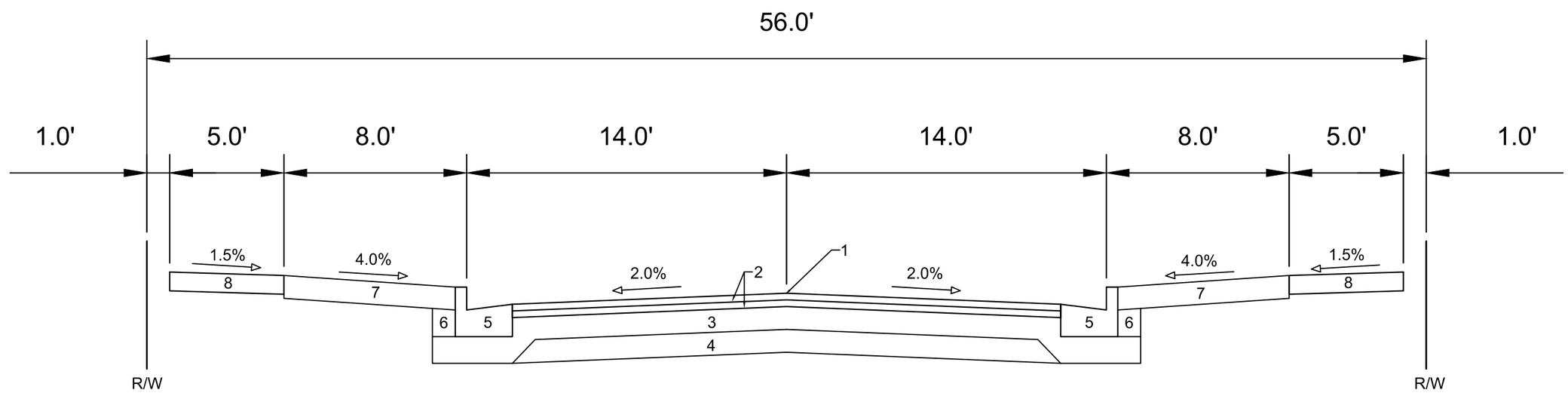

TYPICAL SECTION
WINTER BASIL DRIVE/ QUAKING ASPEN ROAD

1 POINT REFERRED TO ON PROFILE
2 1.75" H.M.A. PAVEMENT- TYPE 4 LT 58-28 S*
3 6.00" CRUSHED AGGREGATE BASE COURSE GRADATION 2
4 6.00" CRUSHED AGGREGATE BASE COURSE GRADATION 1
5 CONCRETE CURB AND GUTTER TYPE 'A'
6 FILL
7 6" TOPSOIL, SEED AND MATTING
8 5" CONCRETE SIDEWALK

SPECIAL NOTES:

* SEE SHEET O-1 FOR SURFACE PAVING RESPONSIBILITY

MARK	REVISION	DATE	BY
---	---	---	---
---	---	---	---
---	---	---	---
---	---	---	---

Designed By: ### Date: 9/23/2023 10:25 PM Scale:

14344 D-2

14344

MADISON, WI

CONTRACT NO: 9219

TYPICAL SECTIONS

FIRST ADDITION TO 1000 OAKS PHASE 11

M:\DESIGN\Projects\14344\CAD\Streets\14344EN-Details.dwg

CITY OF MADISON WISCONSIN

14344

D-2

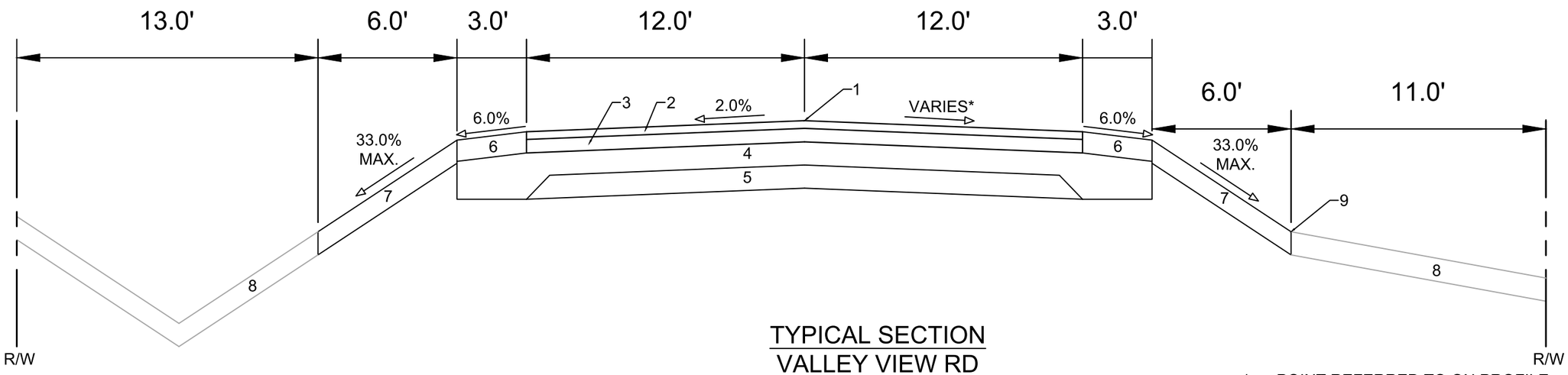

TYPICAL SECTION
VALLEY VIEW RD
STA 120+40.42 TO STA 120+53.09

1 POINT REFERRED TO ON PROFILE
2 2.00" H.M.A. PAVEMENT- TYPE 4 MT 58-28 S**
3 3.50" H.M.A. PAVEMENT- TYPE 3 MT 58-28 S
4 6.00" CRUSHED AGGREGATE BASE COURSE GRADATION 2
5 6.00" CRUSHED AGGREGATE BASE COURSE GRADATION 1
6 5.50" CRUSHED AGGREGATE BASE COURSE GRADATION 3
7 6.00" TOPSOIL, SEED AND MATTING
8 EX.GROUND TO REMAIN
9 SLOPE INTERCEPT

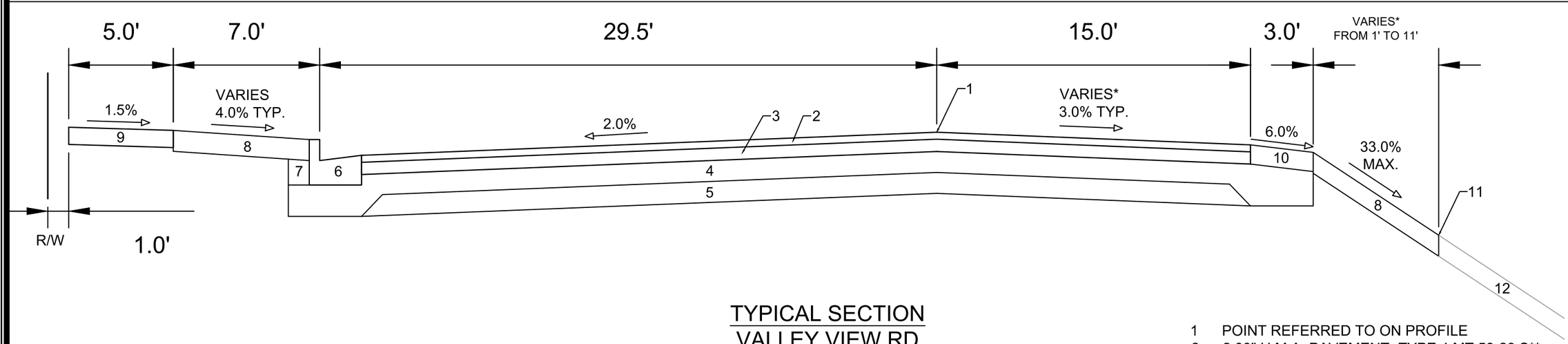

TYPICAL SECTION
VALLEY VIEW RD
STA 119+00.00 TO STA 119+29.07

1 POINT REFERRED TO ON PROFILE
2 2.00" H.M.A. PAVEMENT- TYPE 4 MT 58-28 S**
3 3.50" H.M.A. PAVEMENT- TYPE 3 MT 58-28 S
4 6" CRUSHED AGGREGATE BASE COURSE GRADATION 2
5 6" CRUSHED AGGREGATE BASE COURSE GRADATION 1
6 CONCRETE CURB AND GUTTER TYPE 'A'.
7 FILL
8 6" TOPSOIL, SEED AND MATTING
9 5" CONCRETE SIDEWALK
10 5.5" CRUSHED AGGREGATE BASE COURSE GRADATION 3
11 SLOPE INTERCEPT
12 EX.GROUND TO REMAIN

SPECIAL NOTES:

* SEE P & X SHEETS FOR CROSS SLOPES AND WIDTHS
** SEE SHEET O-1 FOR SURFACE PAVING RESPONSIBILITY

MARK	REVISION	DATE	BY
---	---	---	---
---	---	---	---
---	---	---	---
---	---	---	---

Designed By: ### Date: 9/23/2023 10:25 PM Scale:
14344

D-3

14344

MADISON, WI

CONTRACT NO: 9219

TYPICAL SECTIONS

FIRST ADDITION TO 1000 OAKS PHASE 11

M:\DESIGN\Projects\14344\CAD\Streets\14344EN-Details.dwg

CITY OF MADISON WISCONSIN

14344

D-3

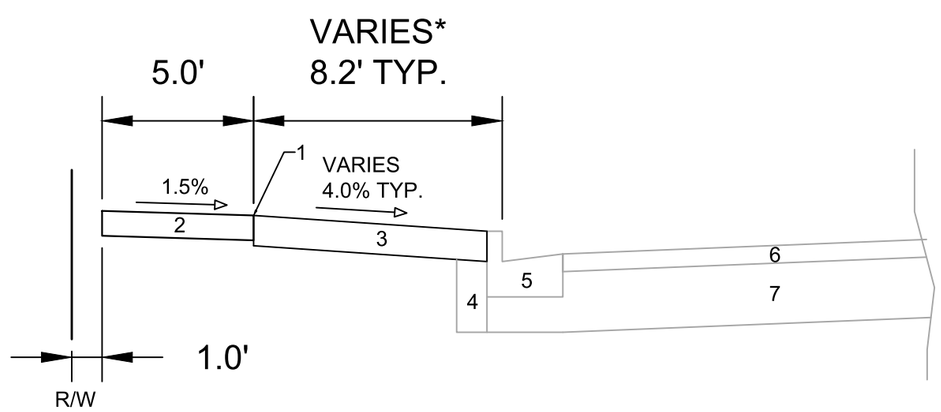

TYPICAL SECTION
S POINT RD SIDEWALK

1 POINT REFERRED TO ON PROFILE
2 5.00" CONCRETE SIDEWALK
3 6.00" TOPSOIL, SEED AND MATTING
4 EX. FILL TO REMAIN
5 EX. CONCRETE CURB AND GUTTER TYPE 'A'
6 EX. ASPHALTIC PAVEMENT TO REMAIN
7 EX. PAVEMENT BASE COURSE TO REMAIN

MARK	REVISION	DATE	BY
---	---	---	---
---	---	---	---
---	---	---	---
---	---	---	---

Designed By: ### Date: 9/23/2023 10:25 PM Scale:
14344 D-4

14344
MADISON, WI
CONTRACT NO: 9219

TYPICAL SECTIONS
FIRST ADDITION TO 1000 OAKS PHASE 11
M:\DESIGN\Projects\14344\CAD\Streets\14344EN-Details.dwg

14344
D-4

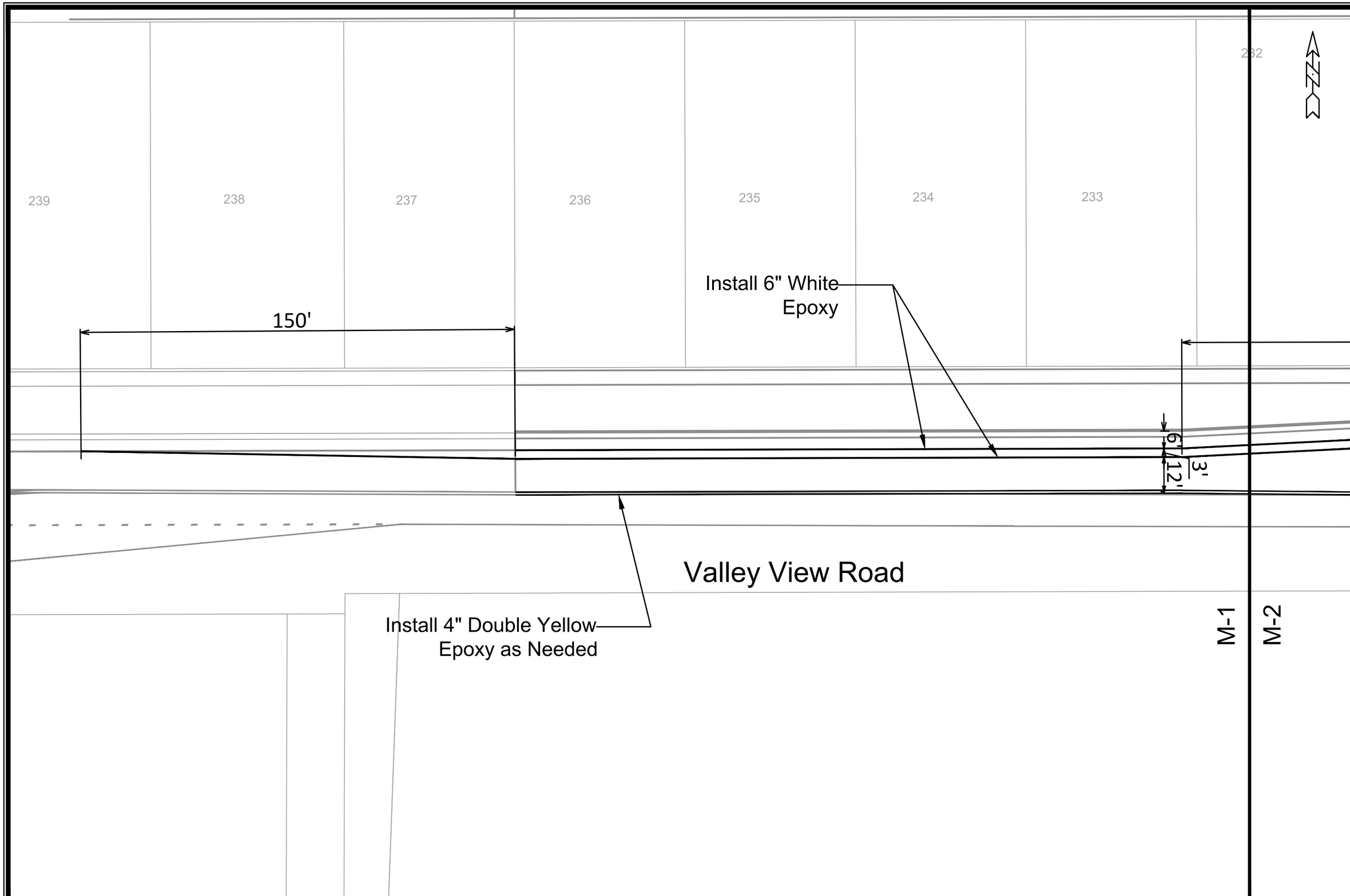

MARK	REVISION	DATE	BY
---	---	---	---
---	---	---	---
---	---	---	---
---	---	---	---
---	---	---	---

Designed By: SDM | Date: 9/29/2023 11:13 AM | Scale: 1:30 | M-1

14344

MADISON, WI

CONTRACT NO: 9219

MARKING PLAN

FIRST ADDITION TO 1000 OAKS PHASE 11

M:\DESIGN\Projects\14344\CAD\Traffic\14344TE-PavementMarking.dwg

14344

M-1

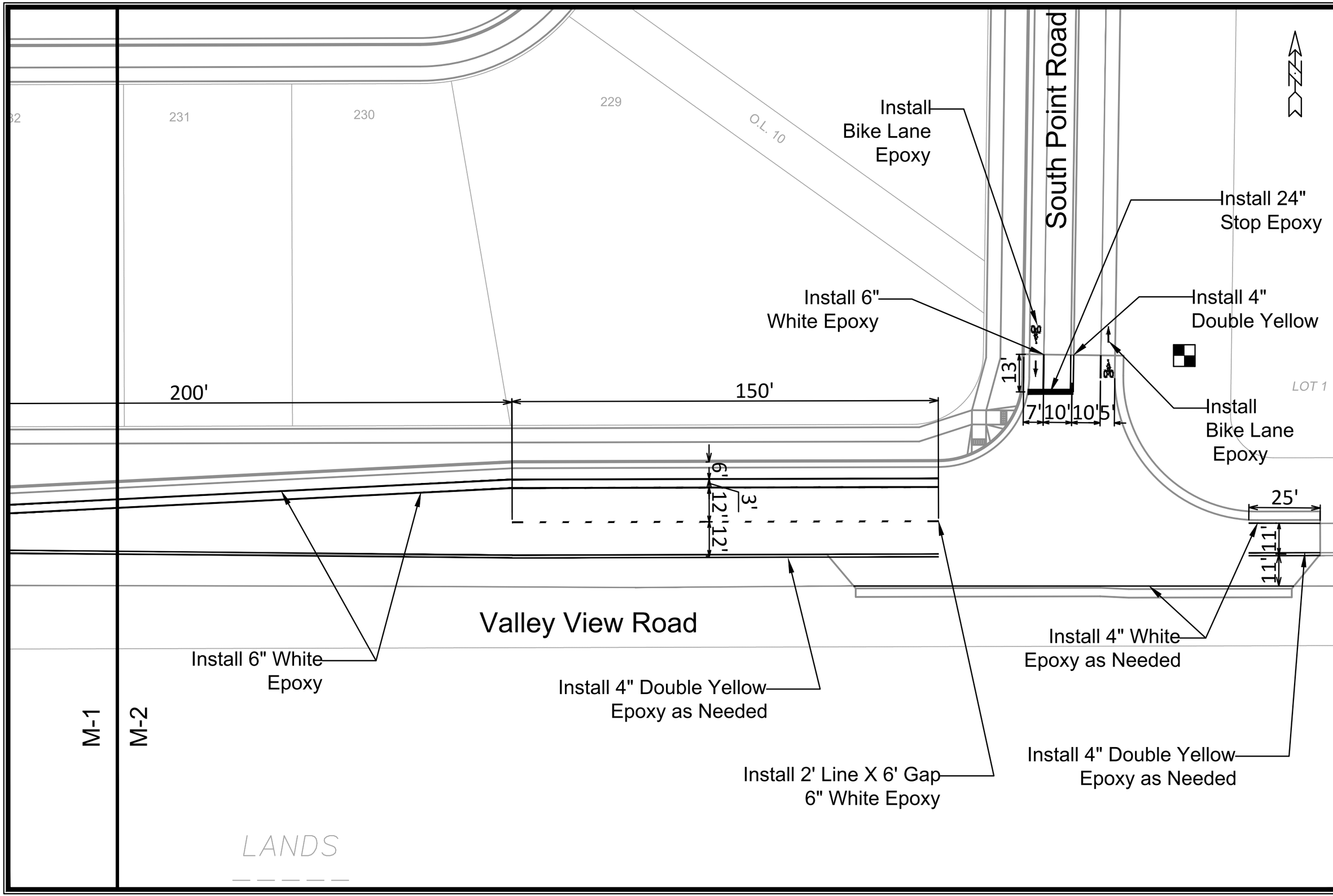

MARK	REVISION	DATE	BY
---	---	---	---

Designed By: SOM | Date: 9/29/2023 11:13 AM | Scale: 1:30 | M-2

14344

MADISON, WI

CONTRACT NO: 9219

MARKING PLAN

FIRST ADDITION TO 1000 OAKS PHASE 11

M:\DESIGN\Projects\14344\CAD\Traffic\14344TE-PavementMarking.dwg

14344

M-2

LOT 205
LOT 206
LOT 207
LOT 208
LOT 209
LOT 210
LOT 197
QUAKING ASPEN RD
LOT 354
LOT 362
LOT 361
LOT 360
LOT 359
LOT 358
LOT 357
LOT 356
LOT 355
LOT 228
WINTER BASIL DR
O.L. 10
LOT 237
LOT 236
LOT 235
LOT 234
LOT 233
LOT 232
LOT 231
LOT 230
LOT 229
S POINT RD
TOP OF BANK
R/W
30' WIDE BUILDING SETBACK
15' WIDE TLE FOR GRADING AND SLOPING
10' WIDE PUBLIC UTILITY EASEMENT
TOWN OF MIDDLETON
LOT 1 - CSM 1338
VALLEY VIEW RD
15" CMP
IE=1123.03
IE=1125.01
EX SOUTH ¼ CORNER SEC.28, T7N, R8E.
N: 472,292.08
E: 776,237.24
THE CONTRACTOR SHALL REMOVE AND RESET MONUMENT AS DESCRIBED IN SECTION 107.2 OF THE CITY OF MADISON STANDARD SPECIFICATIONS FOR PUBLIC WORKS CONSTRUCTION, LATEST EDITION.
LANDS

LEGEND

SURFACE PAVING BY DEVELOPER UNDER CONTRACT NO. 9219

SURFACE PAVING BY CITY UNDER RESURFACING CONTRACT

MARK	REVISION	DATE	BY
---	---	---	---
---	---	---	---
---	---	---	---
---	---	---	---

Designed By: #### Date: 10/12/2023 10:34 AM Scale: ########

14344

O-1

14344

MADISON, WI

CONTRACT NO: 9219

OVERVIEW PLAN

FIRST ADDITION TO 1000 OAKS PHASE 11

M:\DESIGN\Projects\14344\CAD\Streets\14344EN-Overview Plan.dwg

14344

O-1

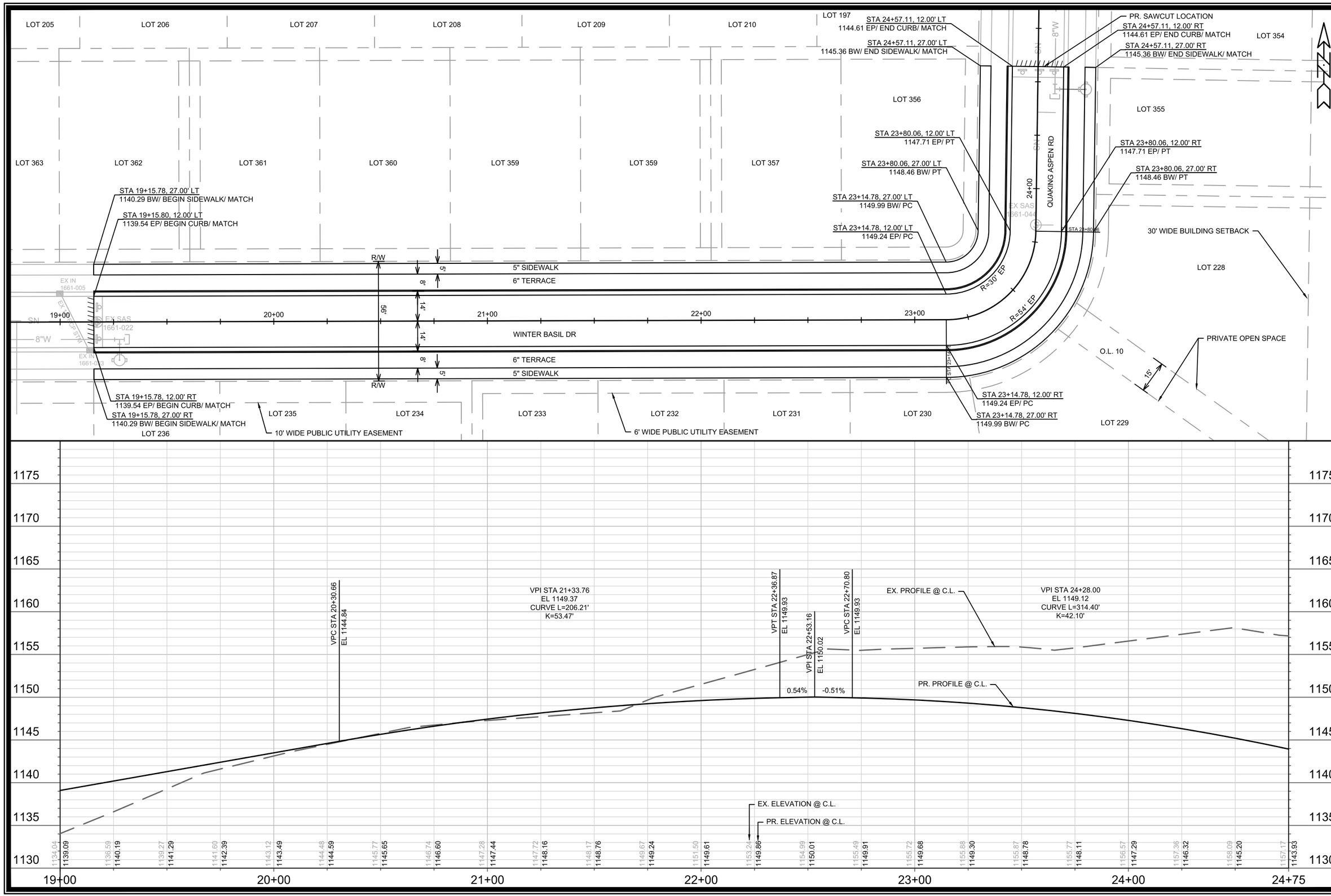

MARK	REVISION	DATE	BY
---	---	---	---

Designed By: ### Date: 10/12/2023 10:27 AM Scale: ########

14344

P-1

14344

MADISON, WI

9219

CONTRACT NO:

PLAN & PROFILE - WINTER BASIL DR & QUAKING ASPEN RD

FIRST ADDITION TO 1000 OAKS PHASE 11

M:\DESIGN\Projects\14344\CAD\Streets\14344EN-PnP.dwg

CITY OF MADISON WISCONSIN

14344

P-1

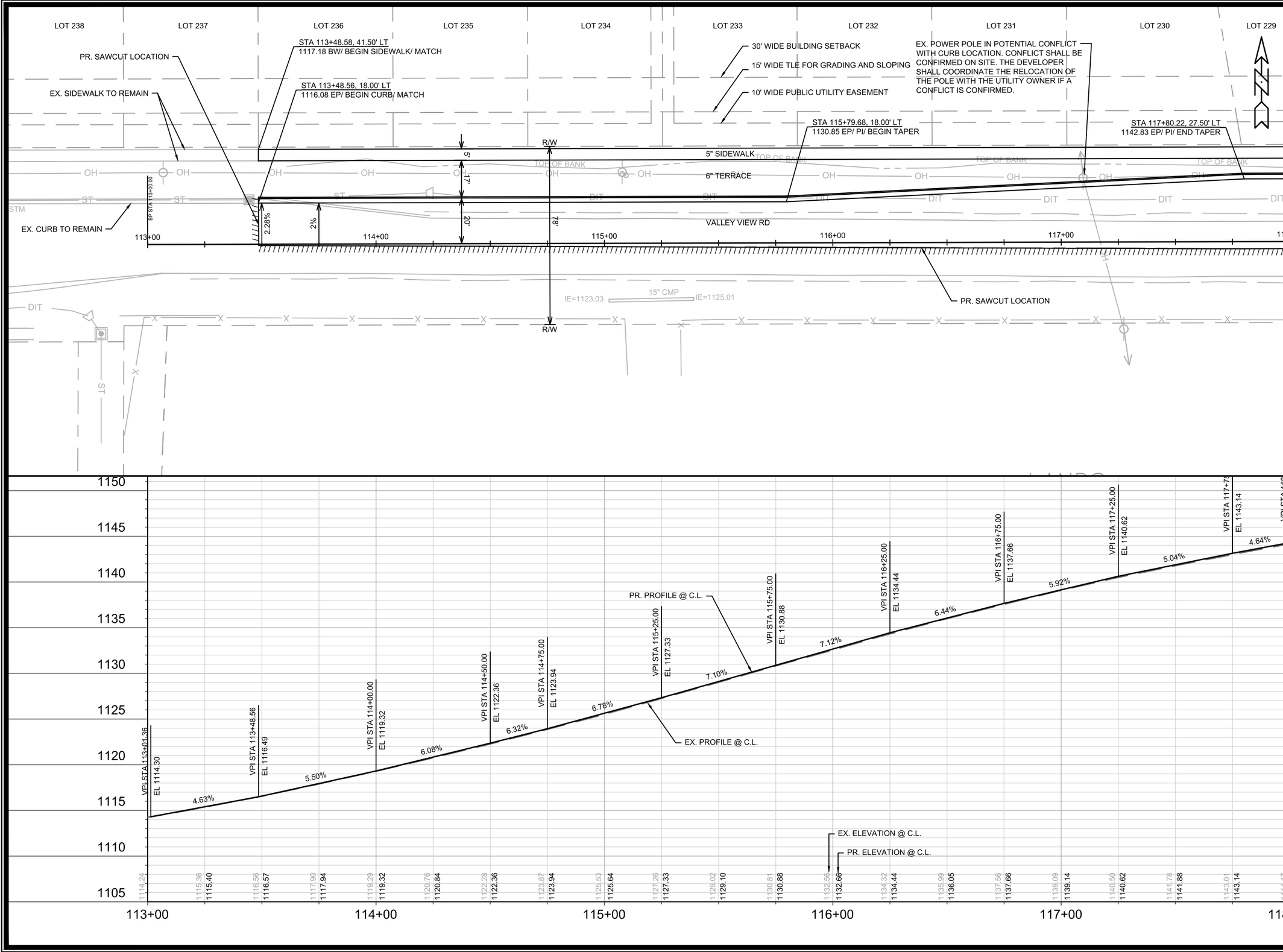

MARK	REVISION	DATE	BY
---	---	---	---
---	---	---	---
---	---	---	---
---	---	---	---

Designed By: ### Date: 10/12/2023 10:27 AM Scale: 1" = 40'

14344 P-2

14344

MADISON, WI

CONTRACT NO: 9219

PLAN & PROFILE - VALLEY VIEW RD

FIRST ADDITION TO 1000 OAKS PHASE 11

M:\DESIGN\Projects\14344\CAD\Streets\14344EN-PnP.dwg

CITY OF MADISON WISCONSIN

14344

P-2

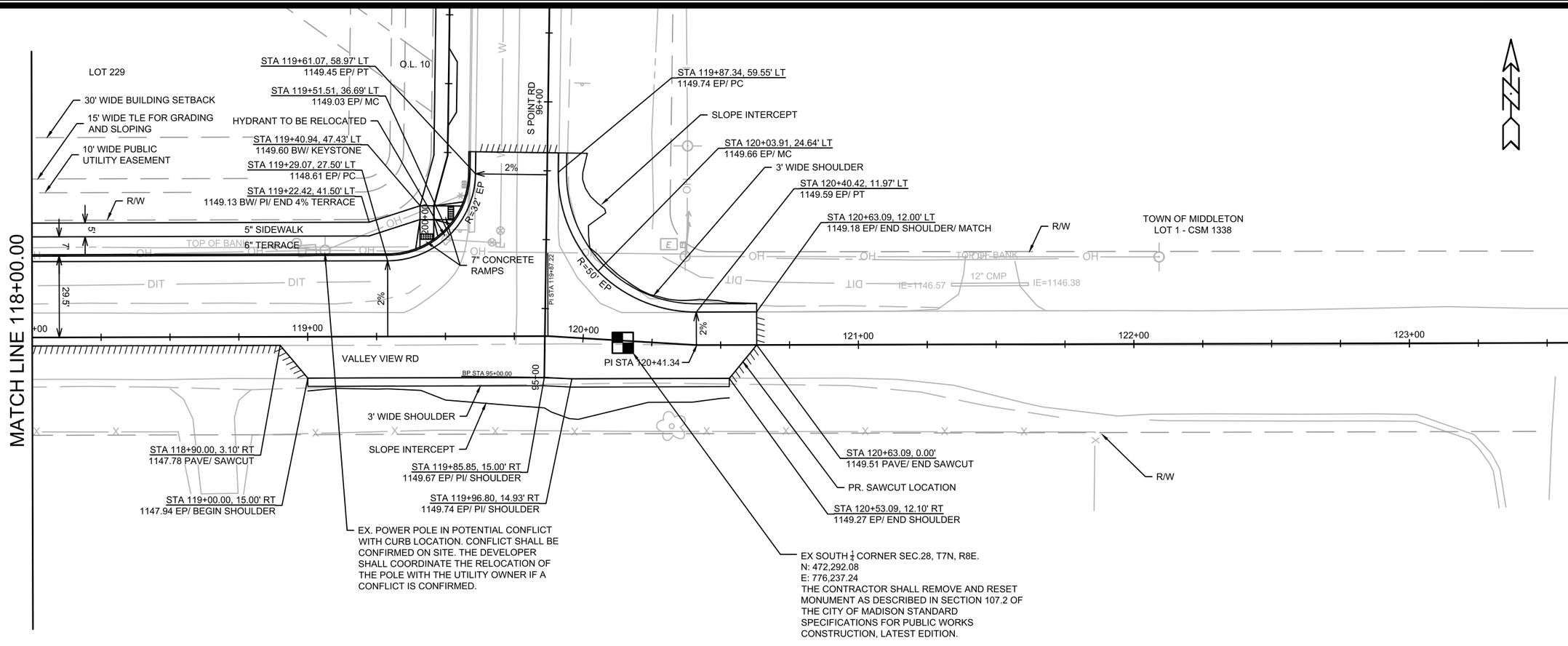

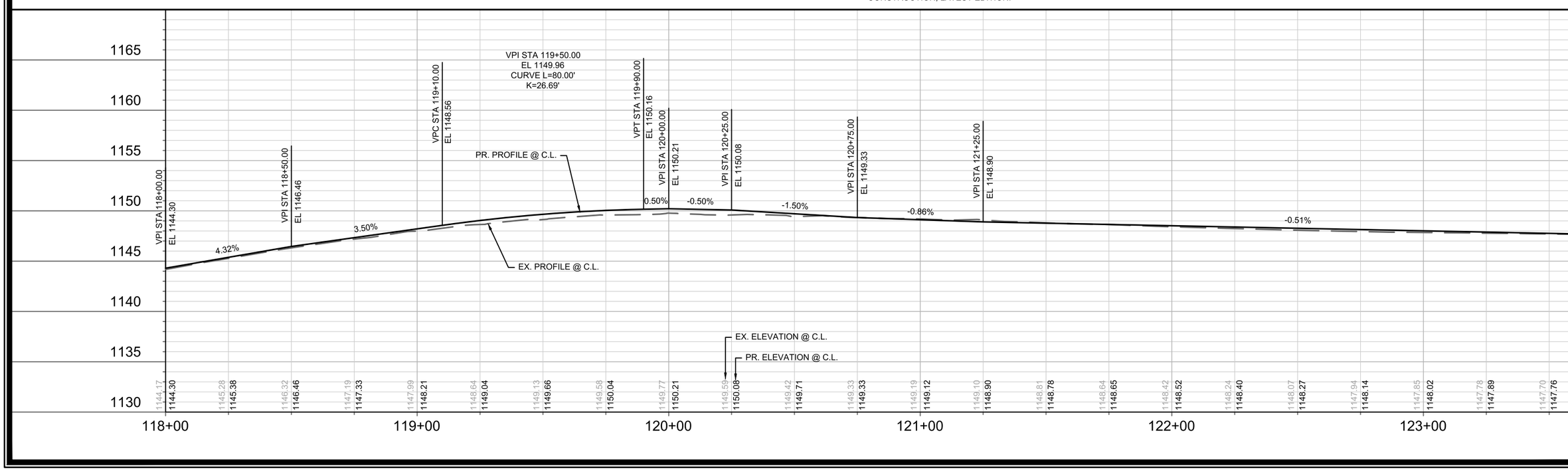

MARK	REVISION	DATE	BY
---	---	---	---
---	---	---	---
---	---	---	---
---	---	---	---

Designed By: ### Date: 10/12/2023 10:27 AM Scale: 1" = 40'

P-3

14344

MADISON, WI

CONTRACT NO: 9219

PLAN & PROFILE - VALLEY VIEW RD

FIRST ADDITION TO 1000 OAKS PHASE 11

M:\DESIGN\Projects\14344\CAD\Streets\14344EN-PnP.dwg

CITY OF MADISON WISCONSIN

14344

P-3

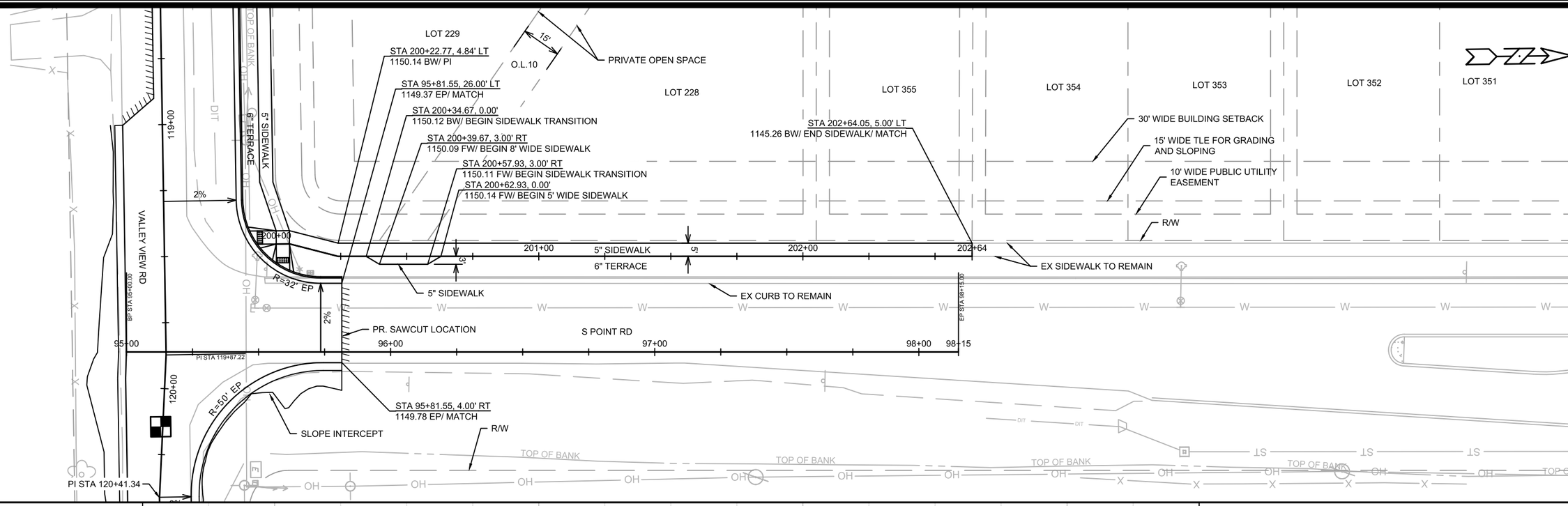

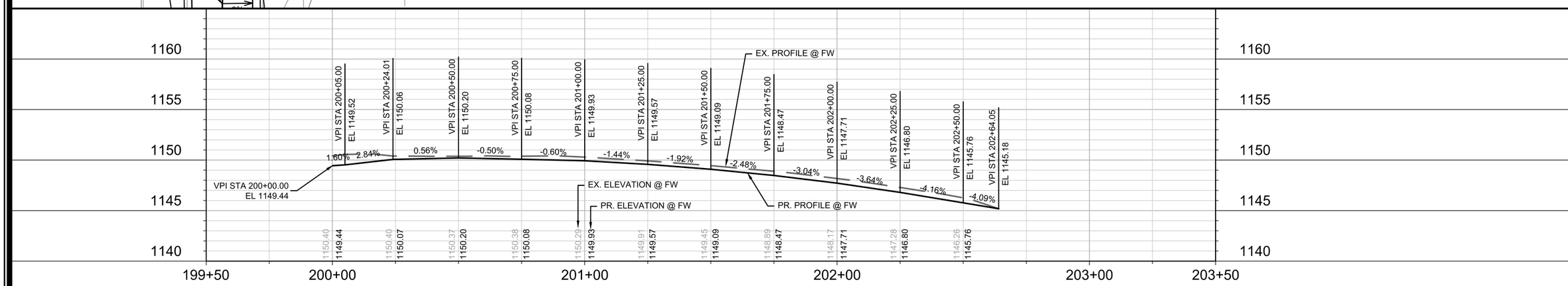

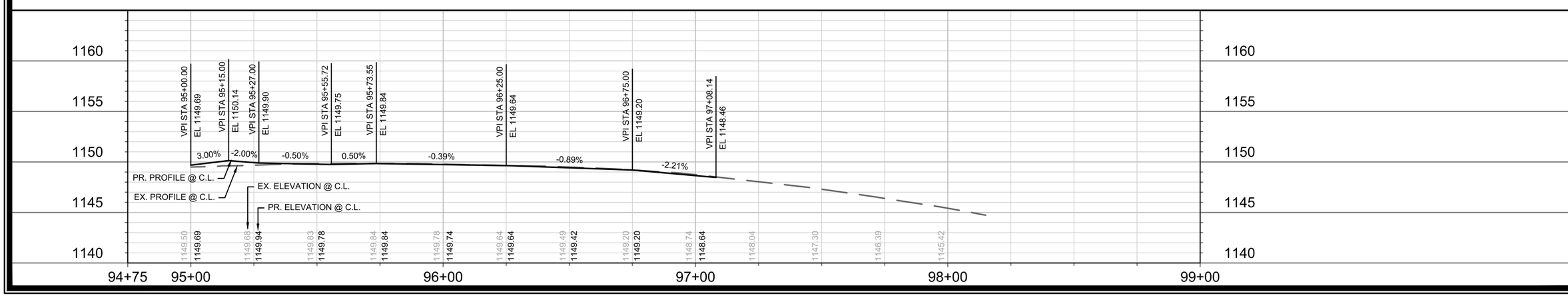

MARK	REVISION	DATE	BY
---	---	---	---
---	---	---	---
---	---	---	---
---	---	---	---
---	---	---	---

Designed By: #### Date: 10/12/2023 10:27 AM Scale: 1" = 40'

14344 P-4

14344

MADISON, WI

CONTRACT NO: 9219

PLAN & PROFILE - S POINT RD

FIRST ADDITION TO 1000 OAKS PHASE 11

M:\DESIGN\Projects\14344\CAD\Streets\14344EN-PnP.dwg

CITY OF MADISON WISCONSIN

14344

P-4

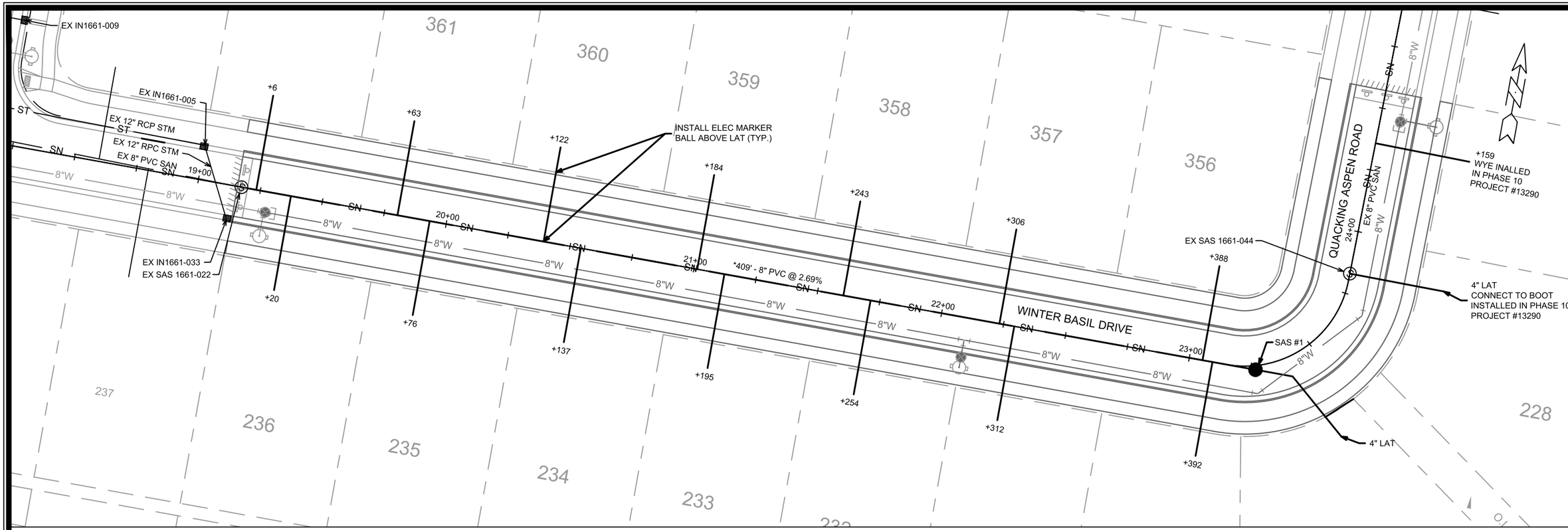

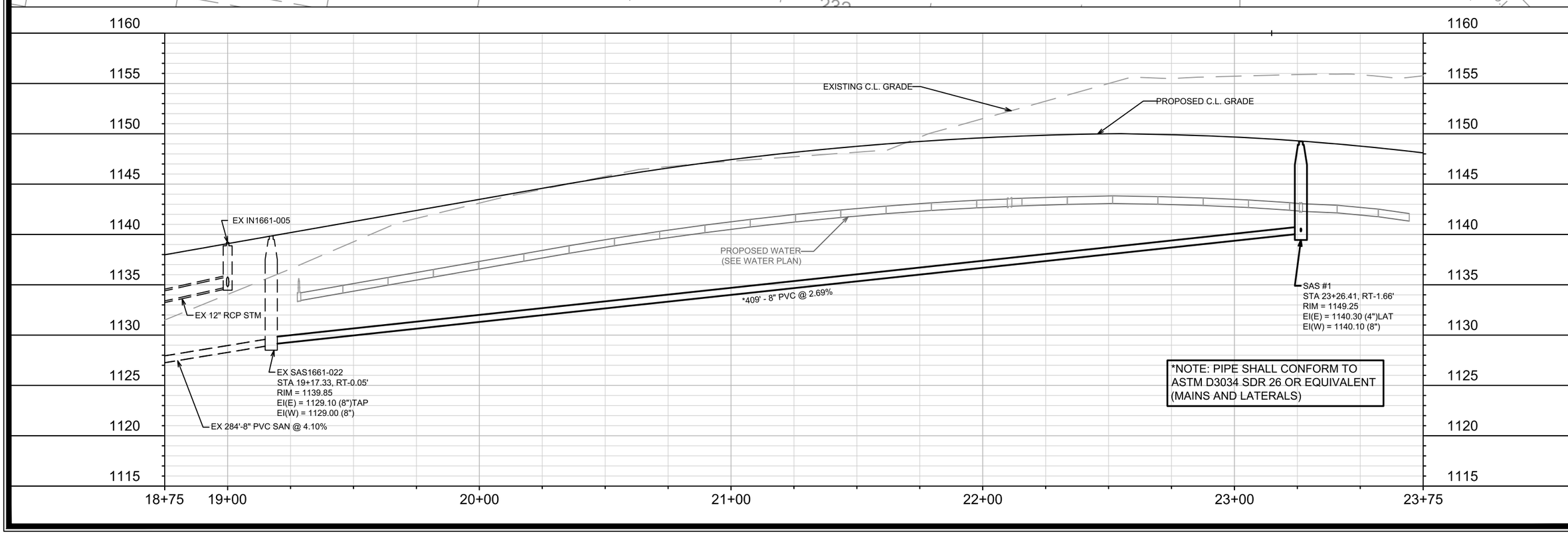

MARK	REVISION	DATE	BY
---	---	---	---
---	---	---	---
---	---	---	---
---	---	---	---
---	---	---	---

Designed By: TAC | Date: 10/3/2023 12:22 PM | Scale: 1:40

14344

U-1

14344

MADISON, WI

9219

CONTRACT NO:

UTILITIES PLAN & PROFILE - WINTER BASIL DRIVE

FIRST ADDITION TO 1000 OAKS PHASE 11

M:\DESIGN\Projects\14344\CAD\Sewers\14344SWR-PipeNetwork.dwg

CITY OF MADISON WISCONSIN

14344

U-1

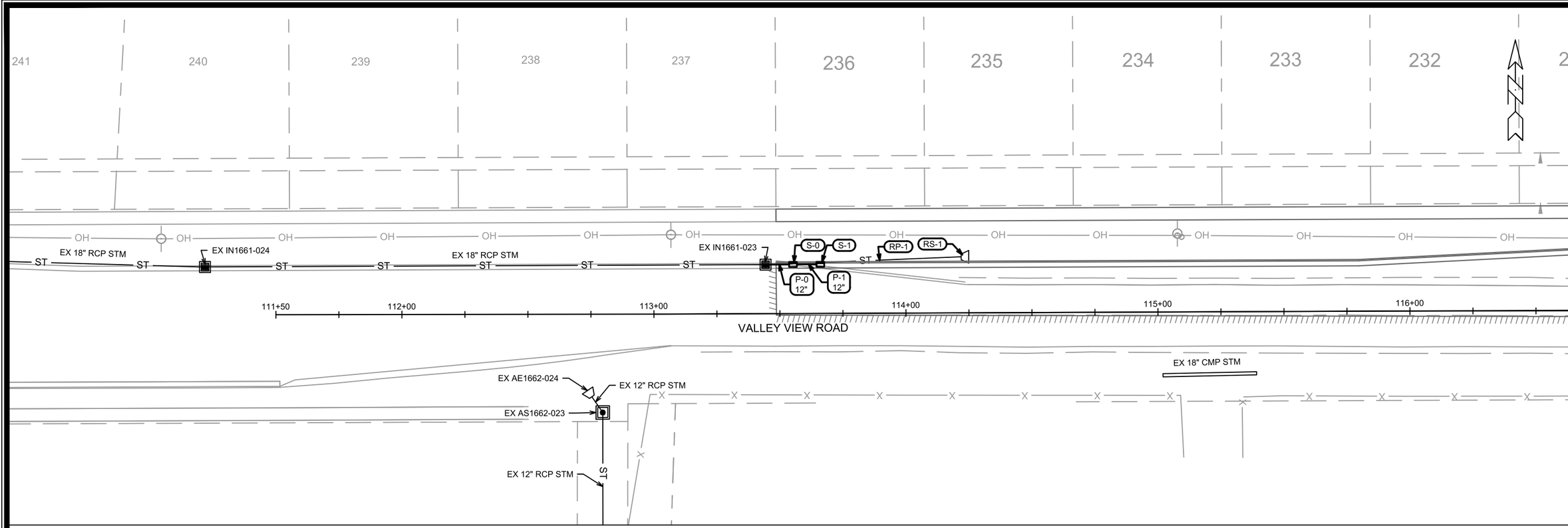

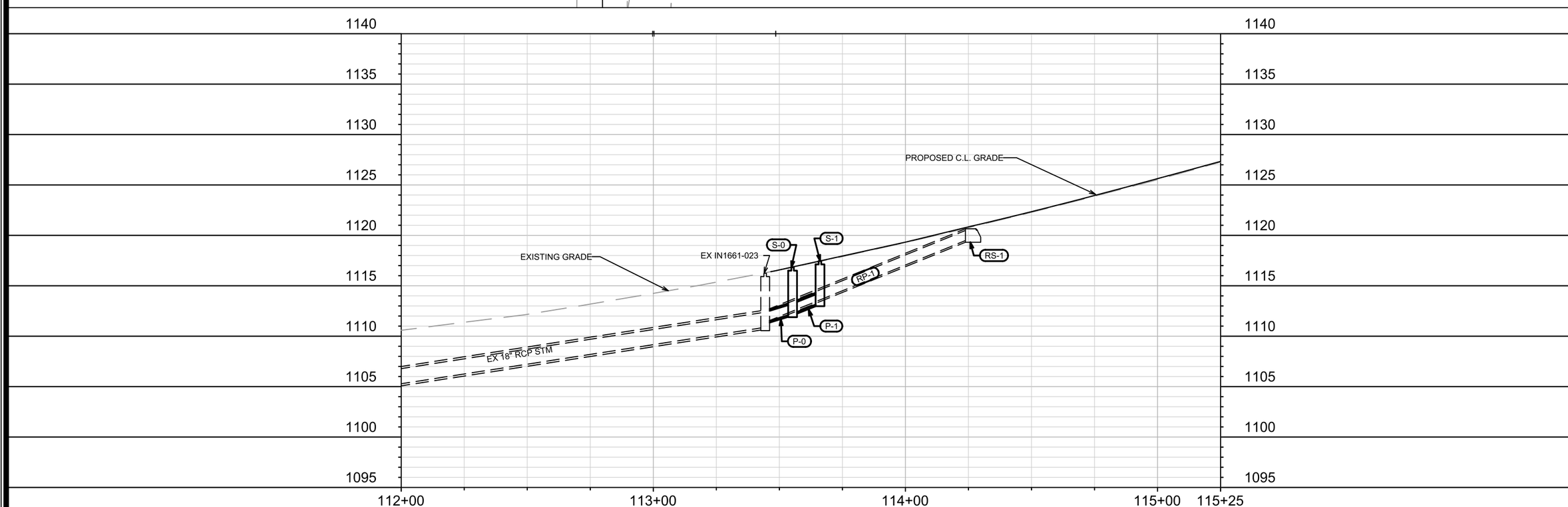

MARK	REVISION	DATE	BY
---	---	---	---
---	---	---	---
---	---	---	---
---	---	---	---

Designed By: TAC | Date: 10/3/2023 12:22 PM | Scale: 1:40

14344

MADISON, WI

CONTRACT NO: 9219

UTILITIES PLAN & PROFILE - VALLEY VIEW ROAD

FIRST ADDITION TO 1000 OAKS PHASE 11

M:\DESIGN\Projects\14344\CAD\Sewers\14344SWR-PipeNetwork.dwg

14344

U-2

FIRST ADDITION TO 1000 OAKS: PHASE 11	SHEET NO.
PROJECT NO. 14344	U-3
SANITARY AND STORM SEWER SCHEDULE	
CITY OF MADISON	

SANITARY SEWER SCHEDULE

PROPOSED SANITARY STRUCTURES

SAS NO.	STATION	LOCATION (OFFSET)	TOP OF CASTING	E.I.	DEPTH	NOTES
WINTER BASIL DRIVE						
SAS #1	23+26.41	RT-1.66	1149.25	1140.10	9.15	-

SANITARY STRUCTURE ADJUSTMENTS

ADJUST STRUCTURE ID NO.	STATION	LOCATION (OFFSET)	EX. TOC ELEV.	ADJUST ELEV.	ADJUST DIFF.	NOTES
WINTER BASIL DRIVE						
EX SAS1661-022	19+77.33	RT-0.05	1139.85	1139.85	0.00	[1]
QUAKING ASPEN ROAD						
EX SAS1661-044	23+83.00	CL	1147.85	1147.86	0.01	[1]

PROPOSED SANITARY PIPES

FROM (DNSTM)	TO (UPSTM)	DWNSTRM E.I.	UPSTRM E.I.	PLAN (PAY) LGTH (FT)	SLOPE (%)	PIPE SIZE	PVC TYPE	NOTES
WINTER BASIL DRIVE								
EX SAS1661-022	SAS #1	1129.10	1140.10	409	2.69%	8"	SDR-26	-

STORM SEWER SCHEDULE

PROPOSED STORM STRUCTURES

STRUC. NO.	STATION	LOCATION (OFFSET)	TYPE	TOP OF CASTING	E.I.	DEPTH	NOTES
VALLEY VIEW ROAD							
S-0	113+55.25	-19.5	H INLET	1116.83	1111.38	5.45	W/R-3067-7004-V
S-1	113+66.12	-19.5	H INLET	1117.45	1113.31	4.14	W/R-3067-7004-V

REMOVE STORM STRUCTURES

STRUC. NO.	STATION	LOCATION (OFFSET)	TYPE	TOP OF CASTING	E.I.	DEPTH	NOTES
VALLEY VIEW ROAD							
RS-1	114+23.80	LT-22.23	12" RCP AE	-	1120.65	-	-

PROPOSED STORM PIPES

PIPE NO.	FROM (DNSTM)	TO (UPSTM)	DISCH. E.I.	INLET E.I.	PLAN (PAY) LGTH (FT)	PIPE LGTH (FT)	SLOPE (%)	PIPE SIZE	TYPE	NOTES
VALLEY VIEW ROAD										
P-0	IN1661-023	S-0	1111.38	1112.22	11.0	8.0	10.54%	12"	RCP	[2]
P-1	S-0	S-1	1112.22	1113.31	11.0	8.0	13.62%	12"	RCP	-

REMOVE STORM PIPES

REMOVE NO.	REMOVE FROM	REMOVE TO	LGTH (FT)	PAY LGTH (FT)	PIPE SIZE	PIPE TYPE	NOTES
VALLEY VIEW ROAD							
RP-1	IN1661-023	RS-1	79.50	57.00	12"	RCP	-

SPECIFIC NOTES;

[1] ADJUST CASTING HEIGHT TO MATCH ROAD GRADE
[2] TAP EX IN1661-023

STANDARD NOTES:

- ABBREVIATIONS: AE = APRON ENDWALL; RCP = REINFORCED CONCRETE PIPE; HERCP = HORIZONTAL ELLIPTICAL REINFORCED CONCRETE PIPE; DNA = DOES NOT APPLY; SAS = SEWER ACCESS STRUCTURE; LP = LOW POINT INLET STRUCTURE; FP = FIELD POURED STRUCTURE; TR = TOP OF CONCRETE ROOF; NCM = NO CROWN MATCH FOR PIPES; UD = UNDERDRAIN
- TOP OF CASTING GRADE GIVEN IS THE TOP OF CURB FOR INLET STRUCTURES AND THE FLOWLINE OF THE CLOSED CASTING FOR SASs.
- TOP OF CONCRETE ROOF (TR) IS 1.25 BELOW TOP OF CASTING UNLESS OTHERWISE NOTED.
- ALL REINFORCED CONCRETE PIPES TO BE CLASS III UNLESS OTHERWISE NOTED.
- SURVEYOR TO CONFIRM THAT ALL INLET STATION / OFFSETS LINE UP WITH PROPOSED CURB AND GUTTER.
-ALL REBAR FOR FIELD POUR STRUCTURES SHALL BE EPOXY COATED. ANY EXPOSED STEEL SHALL BE TOUCHED UP OR RECOATED PRIOR TO USE.
-ALL FIELD POURED SAS STORM STRUCTURES SHALL BE CONSTRUCTED IN ACCORDANCE WITH STANDARD DETAIL DRAWING 5.7.3.
-ALL PRECAST SAS STORM STRUCTURES SHALL BE CONSTRUCTED IN ACCORDANCE WITH STANDARD DETAIL DRAWING 5.7.5.
- ALL STRUCTURES CALLED OUT AS FIELD POURED SHALL BE FIELD POURED. ALL OTHER STRUCTURES (NOT INDICATED AS FIELD POURED) SHALL BE SUBMITTED TO CITY ENGINEERING FOR APPROVAL IF PRECAST STRUCTURES ARE PREFERRED. CONTACT TODD CHOJNOWSKI OF CITY ENGINEERING AT (608) 266-4094 FOR PRECAST APPROVALS, FAX SHOP DRAWINGS TO (608)264-9275, OR EMAIL SHOP DRAWINGS TO TCHOJNOWSKI@CITYOFMADISON.COM.

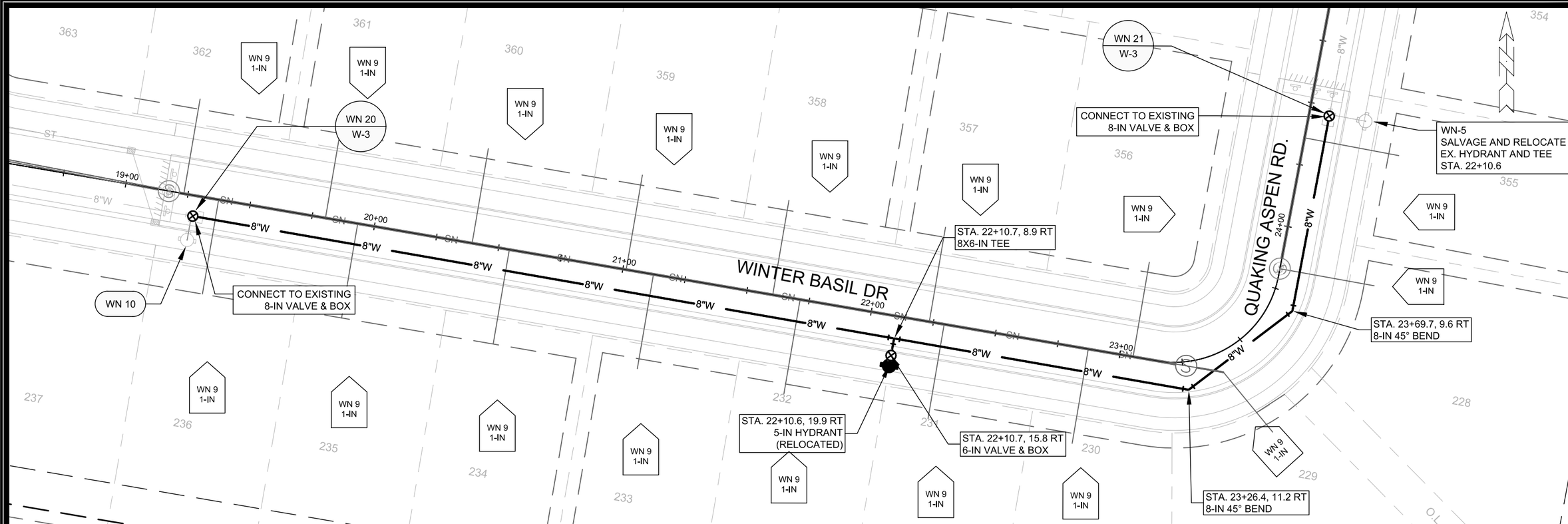

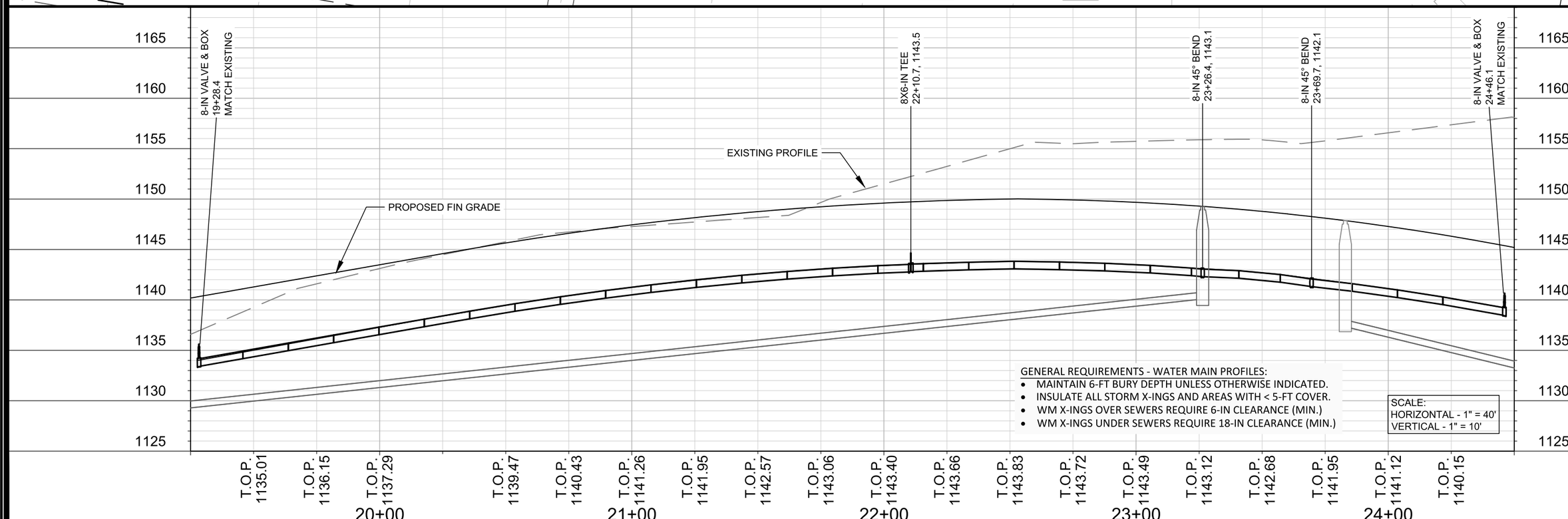

GENERAL REQUIREMENTS - WATER MAIN PROFILES:

- MAINTAIN 6-FT BURY DEPTH UNLESS OTHERWISE INDICATED.
- INSULATE ALL STORM X-INGS AND AREAS WITH < 5-FT COVER.
- WM X-INGS OVER SEWERS REQUIRE 6-IN CLEARANCE (MIN.)
- WM X-INGS UNDER SEWERS REQUIRE 18-IN CLEARANCE (MIN.)

SCALE:
HORIZONTAL - 1" = 40'
VERTICAL - 1" = 10'

SCALE: 1"=40'
DESIGNED BY: JBB
MADISON WATER UTILITY
119 E OLIN AVE, MADISON, WI 53713
PRINTING DATE:9/28/23

FIRST ADDITION TO 1000 OAKS PHASE 11

WATER MAIN PLAN AND PROFILE - WINTER BASIL AND QUAKING ASPEN

CITY OF MADISON, WISCONSIN

CONTRACT NO: 9219

14344

W-1

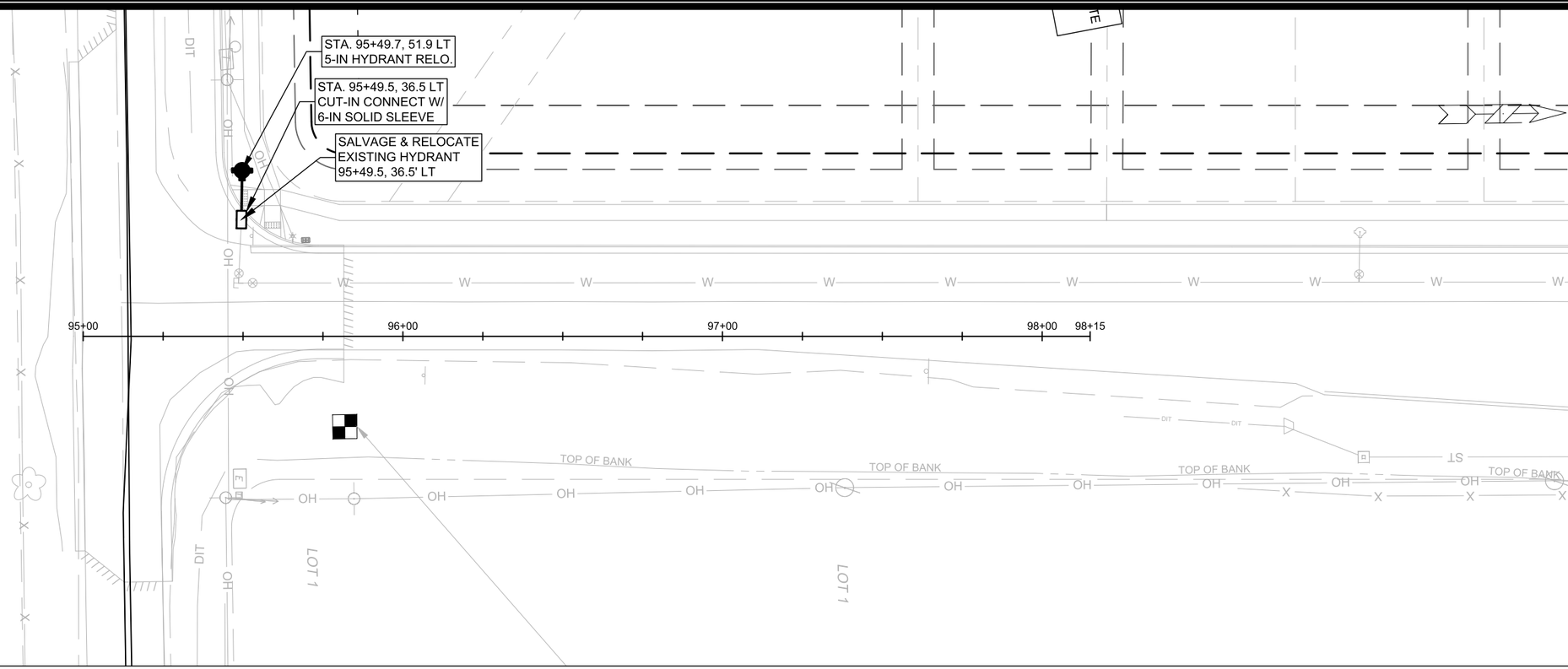

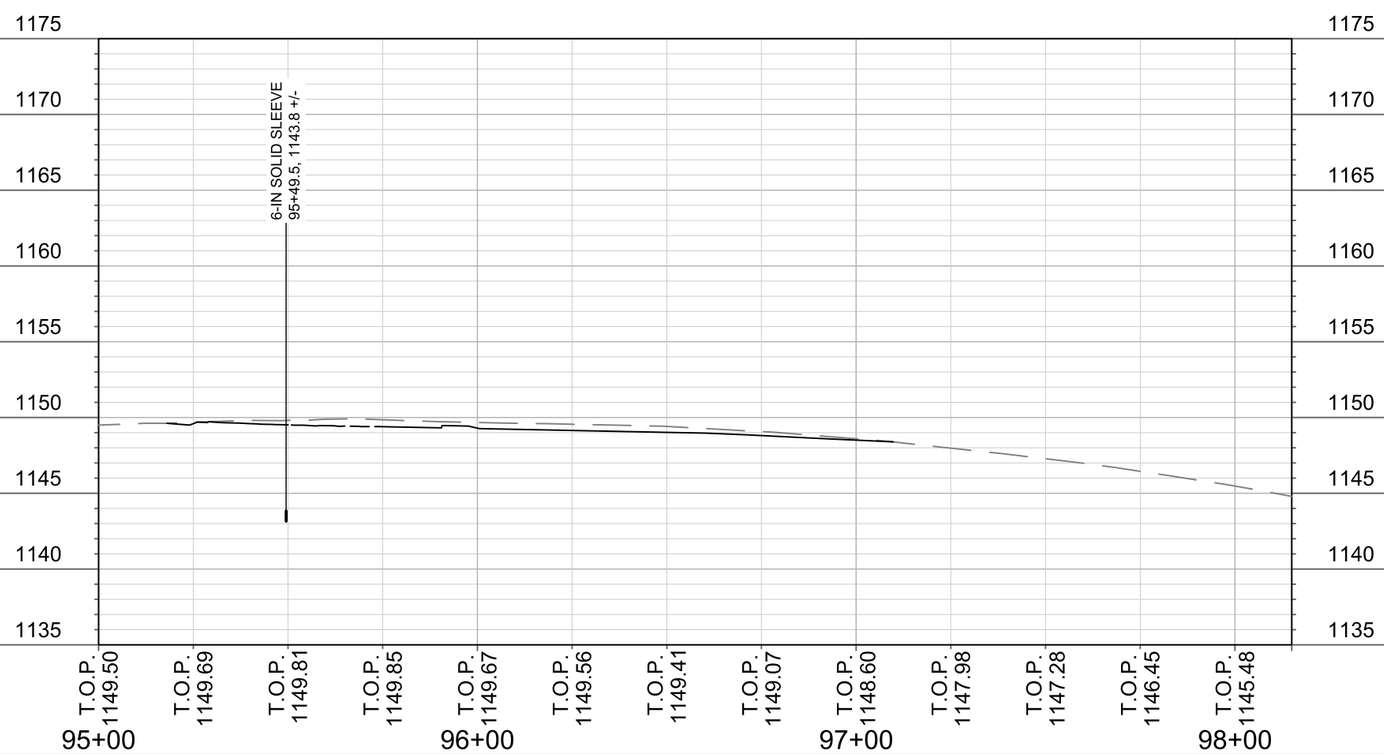

SCALE: 1"=40'
DESIGNED BY: JBB
MADISON WATER UTILITY
119 E OLIN AVE, MADISON, WI 53713
PRINTING DATE:9/28/23

FIRST ADDITION TO 1000 OAKS PHASE 11
WATER MAIN PLAN AND PROFILE - SOUTH POINT ROAD
CITY OF MADISON, WISCONSIN

CONTRACT NO: 9219

14344

W-2

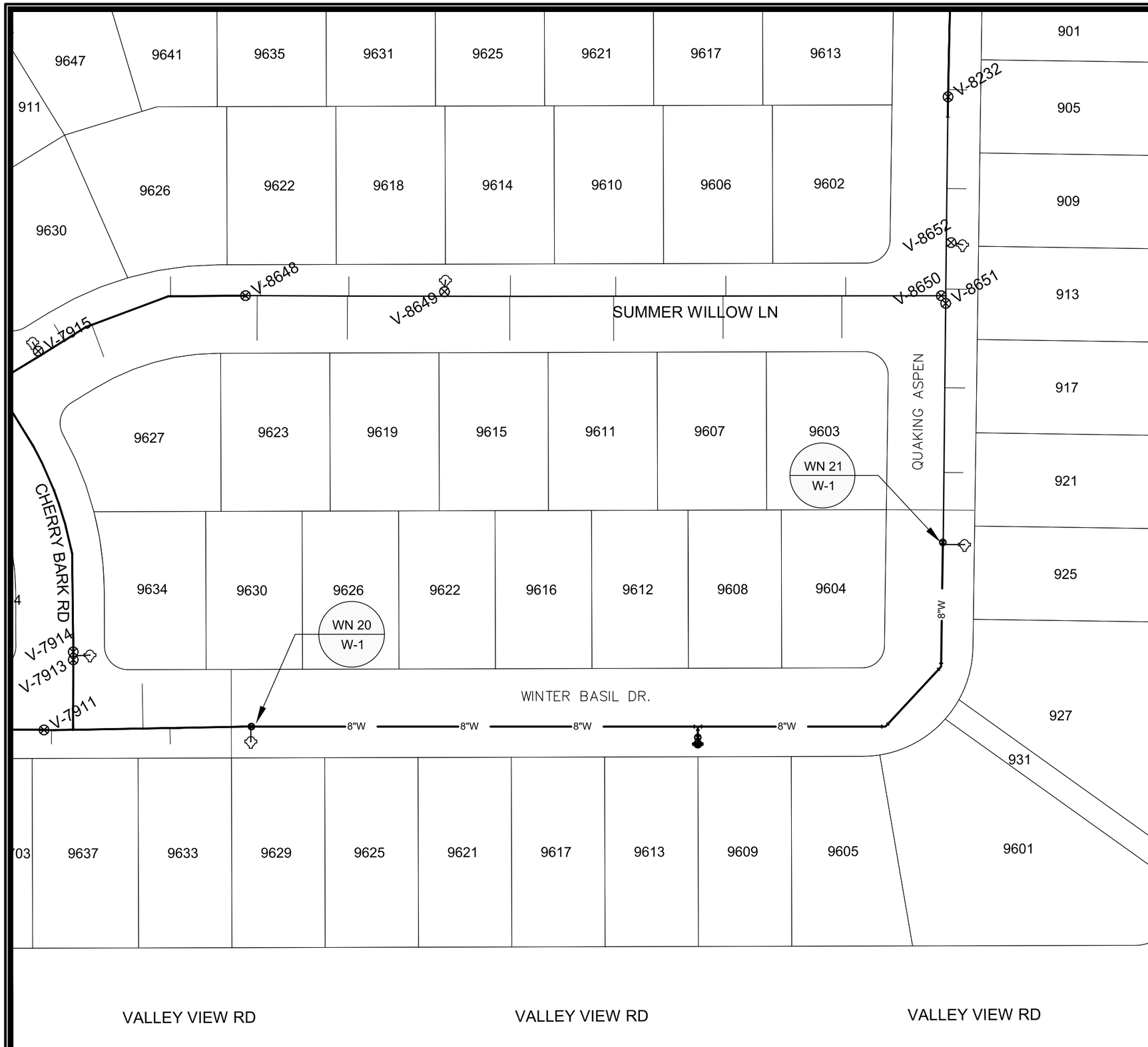

NTS

Madison Water Utility

WN-20
CONNECTION TO EX.8-IN AT WINTER BASIL DR.
-V-7911
-V-7913
NOTIFY:
9633 WINTER BASIL
9634 WINTER BASIL
9637 WINTER BASIL

WN-21
CONNECTION TO EX.8-IN AT QUAKING ASPEN RD.
-V-8651
NOTIFY:
917 QUAKING ASPEN
921 QUAKING ASPEN

DISCLAIMER NOTE:
THE WATER IMPACT PLAN IS PROVIDED FOR REFERENCE PURPOSES TO AID PLANNING CONNECTION POINT ISOLATION AND PREPARING NOTIFICATION LISTS DURING PLANNED OUTAGES. REQUEST ANY ALTERNATIVE CONNECTION METHODS IN WRITING, PER SPECS.

SCALE: NTS
DESIGNED BY: JBB
MADISON WATER UTILITY
119 E OLIN AVE, MADISON, WI 53713
PRINTING DATE:9/27/23

CONTRACT NO: 9219

FIRST ADDITION TO 1000 OAKS PHASE 11

WATER IMPACT PLAN

CITY OF MADISON, WISCONSIN

14344

W-3

M:\DESIGN\PROJECTS\14344\CAD\WATER\14344 WU-IMPACTPLAN.DWG

Madison Water Utility

CONSTRUCTION NOTES:

1. CONSTRUCT NEW WATER MAIN 6.0' BELOW FINISHED GRADE, UNLESS OTHERWISE NOTED. INSULATE MAIN WITH POLYSTYRENE BOARD AT UTILITY CROSSINGS OR OTHER AREAS IDENTIFIED BY ENGINEER AS HAVING INADEQUATE COVER.
2. VERIFY SIZE OF EXISTING WATER SERVICES AND RECONNECT SERVICES AS INDICATED.
3. MINIMIZE DISRUPTION OF SERVICE TO CUSTOMERS. NOTIFY PER CONTRACT REQUIREMENTS OF ANY PLANNED WATER OUTAGE.

WN1	REPLACE THE EXISTING LEAD SERVICE WITH A NEW COPPER SERVICE.
WN-2	EXTEND AND RECONNECT THE EXISTING COPPER SERVICE TO THE NEW WATER MAIN.
WN-3	EXISTING SERVICE TO BE ABANDONED WHEN THE WATER MAIN IS CUT OFF.
WN-4	DISCONNECT FROM THE OLD WATER MAIN AND RECONNECT THE EXISTING COPPER WATER SERVICE LATERAL TO THE NEW WATER MAIN.
WN-5	RELOCATE THE EXISTING FIRE HYDRANT.
WN-6	ABANDON WATER VALVE ACCESS STRUCTURE.
WN-7	FURNISH AND INSTALL THE NEW TOP SECTION FOR THE WATER ACCESS STRUCTURE.
WN-8	ABANDON THE VALVE BOX.
WN-9	FURNISH THE DITCH, COMPACTION, AND ALL MATERIALS AND LABOR FOR THE INSTALLATION OF NEW SERVICE LATERAL.
WN-10	REMOVE AND SALVAGE EXISTING HYDRANT
WN-11	REPLACE THE EXISTING COPPER SERVICE WITH A COPPER SERVICE
WN-20+	SEE WATER IMPACT PLAN FOR CONNECTION POINT ISOLATION AND WATER SHUT-OFF NOTIFICATION INFORMATION.

***ESTIMATE OF MATERIALS SUPPLIED BY CONTRACTOR:**

PAY_ITEM_ID	DESCRIPTION	QUANTITY	UNIT
70002	FURNISH AND INSTALL 6 INCH PIPE & FITTINGS	40	LNFT
70004	FURNISH AND INSTALL 8 INCH PIPE & FITTINGS	560	LNFT
70031	FURNISH AND INSTALL 6-INCH WATER VALVE	1	EACH
70032	FURNISH AND INSTALL 8-INCH WATER VALVE	2	EACH
70041	RELOCATE HYDRANT	2	EACH
70050	FURNISH AND INSTALL 1-INCH SERVICE LATERALS	17	EACH
71025	6 INCH SOLID SLEEVE	1	EACH
71123	8 INCH 45 DEGREE BEND	2	EACH
71210	8X6 TEE	1	EACH
***ESTIMATE OF MATERIALS SALVAGED:**			
70040	HYDRANT	2	EACH
71210	8X6 TEE	1	EACH

** ESTIMATE OF MATERIALS IS FOR INFORMATION ONLY. ENGINEER DOES NOT GUARANTEE ACCURACY OF MATERIAL TAKE-OFF.*

TO OBTAIN LOCATION OF PARTICIPANTS' UNDERGROUND FACILITIES BEFORE YOU DIG IN WISCONSIN

CALL DIGGERS HOTLINE
TOLL FREE
811 OR 1-800-242-8511
FAX-A-LOCATE 1-800-338-3860
TDD (FOR HEARING IMPAIRED) 1-800-542-2289

WIS. STATUTE 182.0175 (1974) REQUIRES MIN. OF 3 WORK DAYS NOTICE BEFORE YOU EXCAVATE.

MEMBER ONE CALL SYSTEMS INTERNATIONAL

DISCLAIMER NOTE: UTILITY LOCATIONS SHOWN ARE APPROXIMATE ONLY. IT SHALL BE THE CONTRACTOR'S RESPONSIBILITY TO DETERMINE THE EXACT HORIZONTAL AND VERTICAL LOCATION OF ALL EXISTING UNDERGROUND AND OVERHEAD UTILITIES PRIOR TO COMMENCING WORK.

PART VII - WATER MAINS AND SERVICE LATERALS

DETAIL DRAWING NO. **7.04**

REVISED: 11/2022

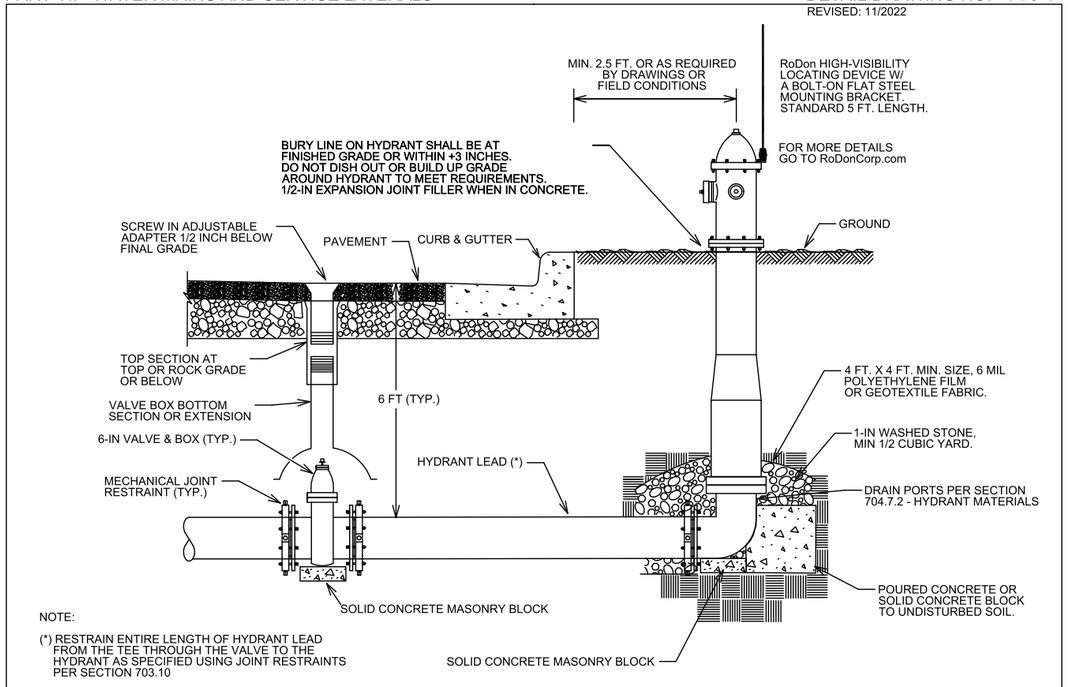

NOTE:

(*) RESTRAIN ENTIRE LENGTH OF HYDRANT LEAD FROM THE TEE THROUGH THE VALVE TO THE HYDRANT AS SPECIFIED USING JOINT RESTRAINTS PER SECTION 703.10

CITY OF MADISON WATER UTILITY	NOT TO SCALE	TYPICAL HYDRANT INSTALLATION

SCALE: NTS
DESIGNED BY: JBB
MADISON WATER UTILITY
119 E OLIN AVE, MADISON, WI 53713
PRINTING DATE:9/28/23

CONTRACT NO: 9219

FIRST ADDITION TO 1000 OAKS PHASE 11

WATER ESTIMATE OF MATERIALS

CITY OF MADISON, WISCONSIN

CITY OF MADISON WISCONSIN

14344

W-4

M:\DESIGN\PROJECTS\14344\CAD\WATER\14344 WU-MATERIALS.DWG

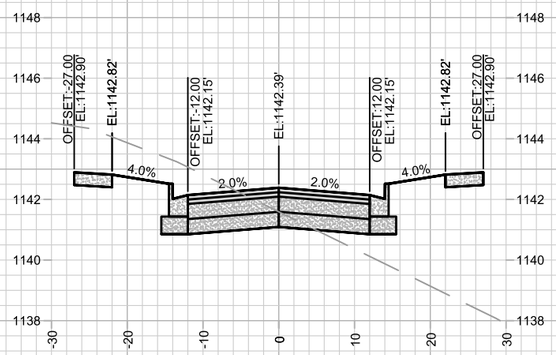

19+75.00

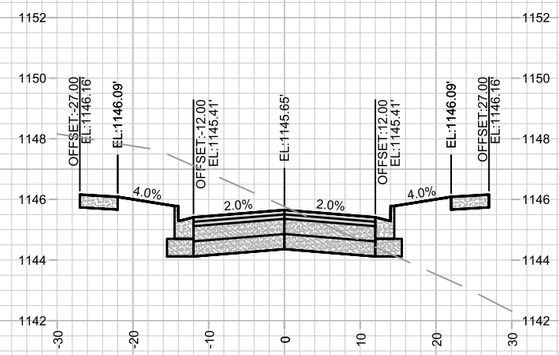

20+50.00

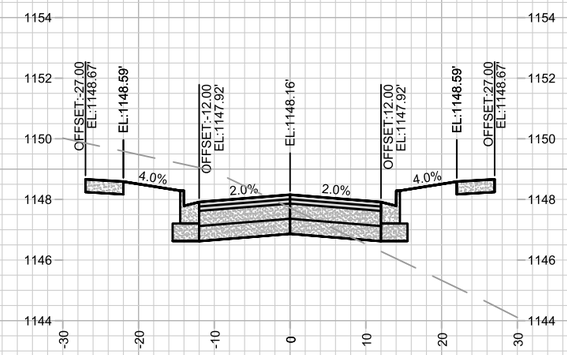

21+25.00

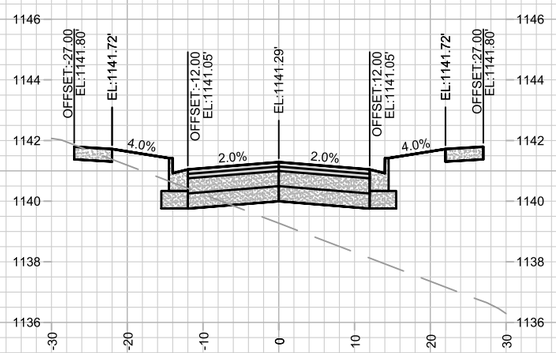

19+50.00

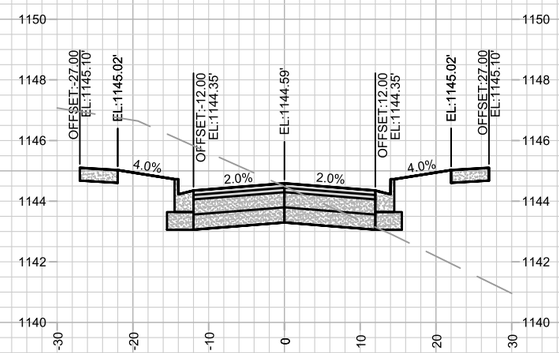

20+25.00

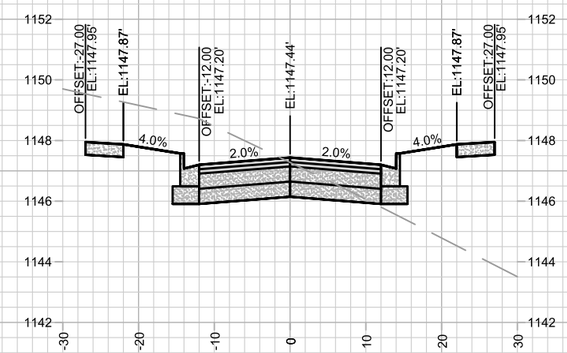

21+00.00

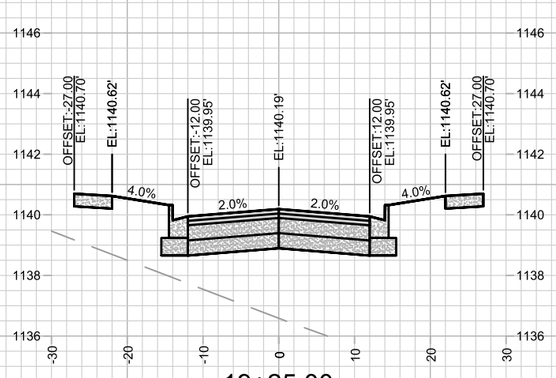

19+25.00

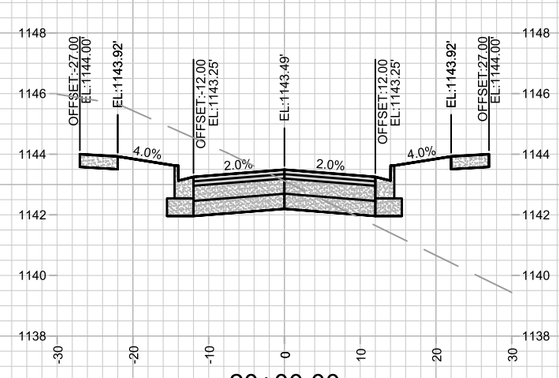

20+00.00

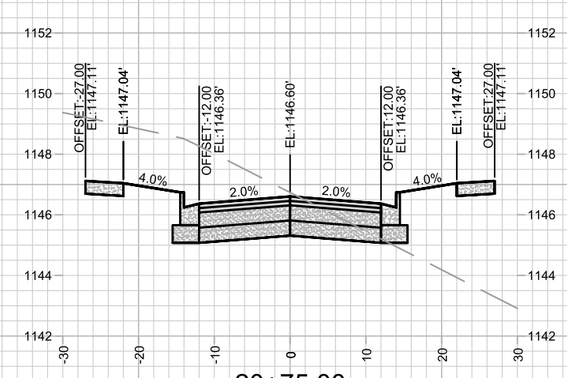

20+75.00

MARK	REVISION	DATE	BY
---	---	---	---
---	---	---	---
---	---	---	---
---	---	---	---

Designed By: #### Date: 10/12/2023 10:41 AM Scale: 1" = 20'

14344

X-1

14344

MADISON, WI

CONTRACT NO: 9219

CROSS SECTIONS - WINTER BASIL DR & QUAKING ASPEN RD

FIRST ADDITION TO 1000 OAKS PHASE 11

M:\DESIGN\Projects\14344\CAD\Streets\14344EN-Xsections.dwg

CITY OF MADISON WISCONSIN

14344

X-1

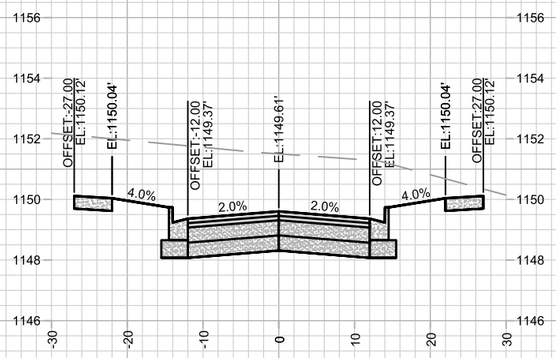

22+00.00

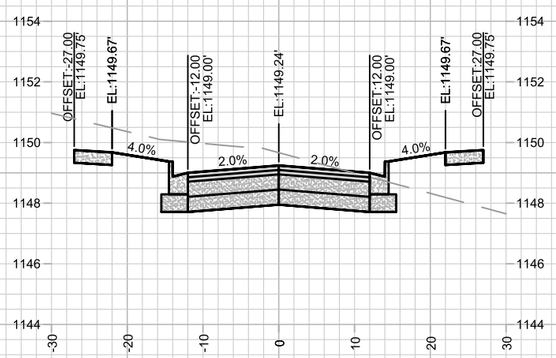

21+75.00

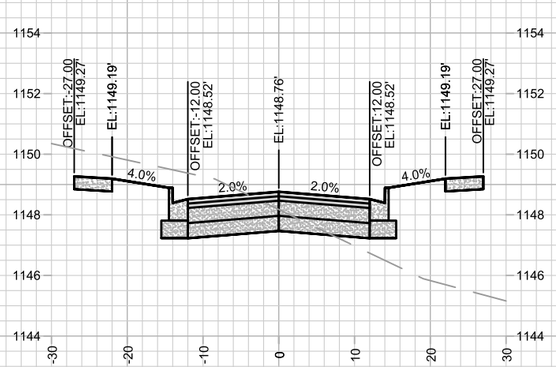

21+50.00

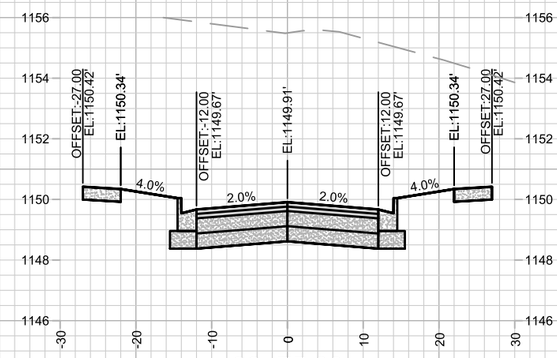

22+75.00

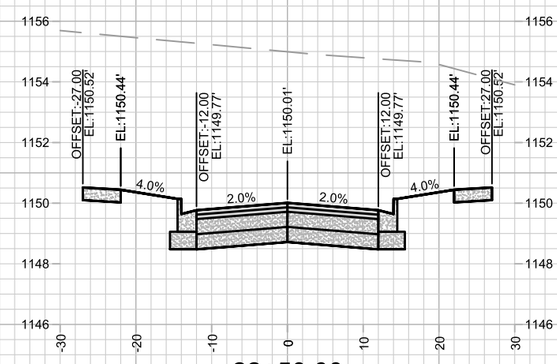

22+50.00

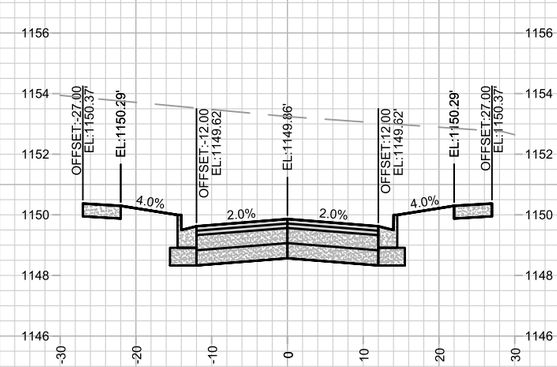

22+25.00

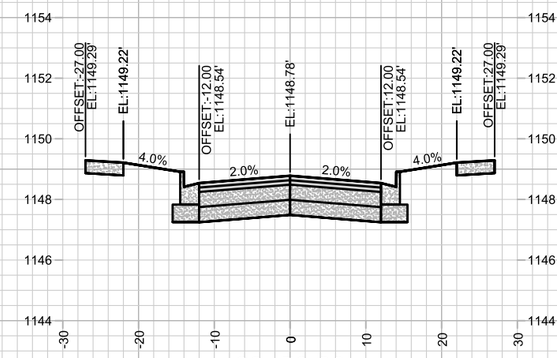

23+50.00

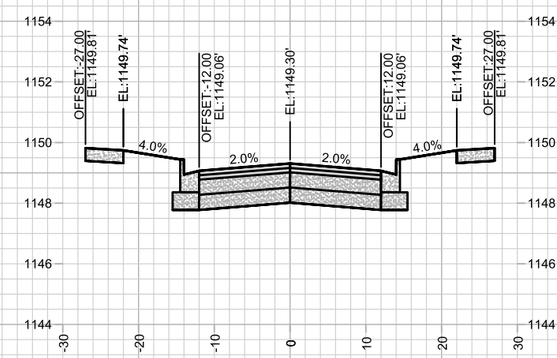

23+25.00

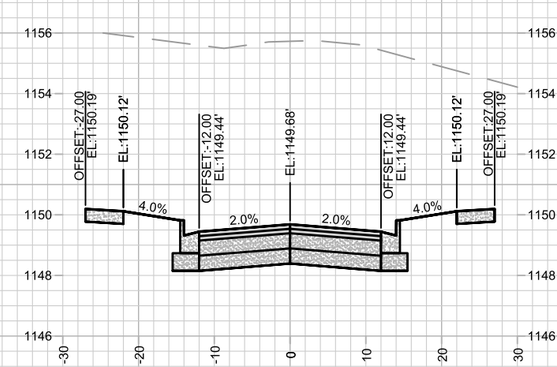

23+00.00

MARK	REVISION	DATE	BY
---	---	---	---
---	---	---	---
---	---	---	---
---	---	---	---

Designed By: #### Date: 10/12/2023 10:41 AM Scale: 1" = 20'

14344 X-2

14344

CROSS SECTIONS - WINTER BASIL DR & QUAKING ASPEN RD

FIRST ADDITION TO 1000 OAKS PHASE 11

MADISON, WI

CONTRACT NO: 9219

M:\DESIGN\Projects\14344\CAD\Streets\14344EN-Xsections.dwg

CITY OF MADISON WISCONSIN

14344

X-2

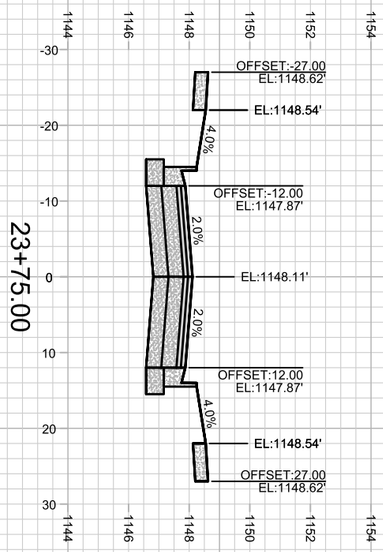

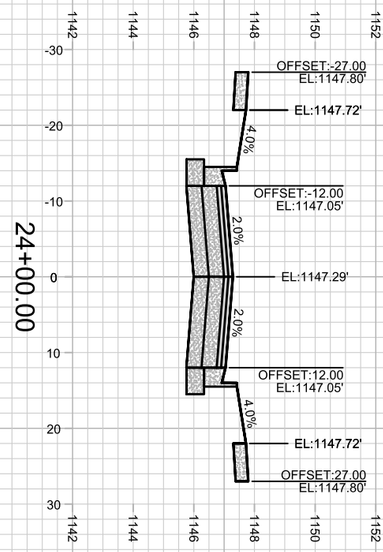

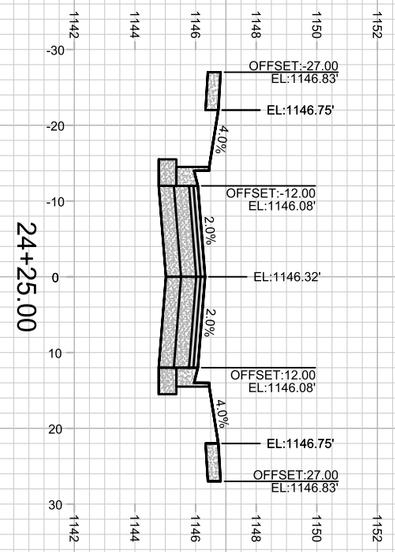

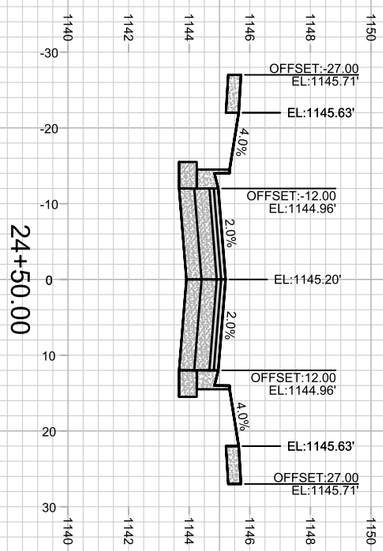

X-3

14344

CROSS SECTIONS - WINTER BASIL DR & QUAKING ASPEN RD 14344

FIRST ADDITION TO 1000 OAKS PHASE 11 MADISON, WI

M:\DESIGN\Projects\14344\CAD\Streets\14344EN-Xsections.dwg CONTRACT NO: 9219

MARK	REVISION	DATE	BY
---	---	---	---
---	---	---	---
---	---	---	---
---	---	---	---

Designed By: ### | Date: 10/12/2023 10:41 AM | Scale: 1" = 20'

14344 X-3

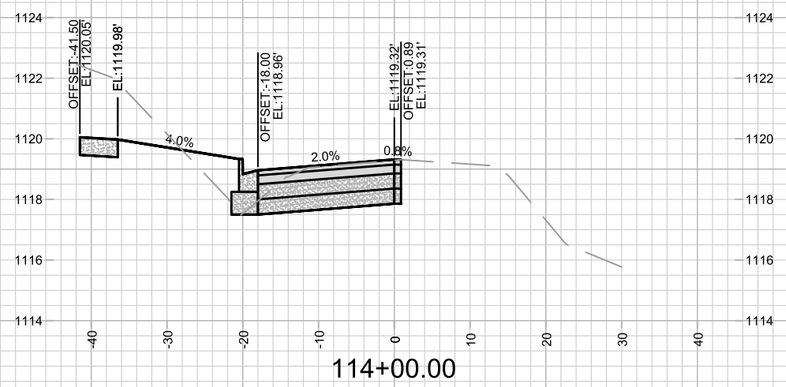

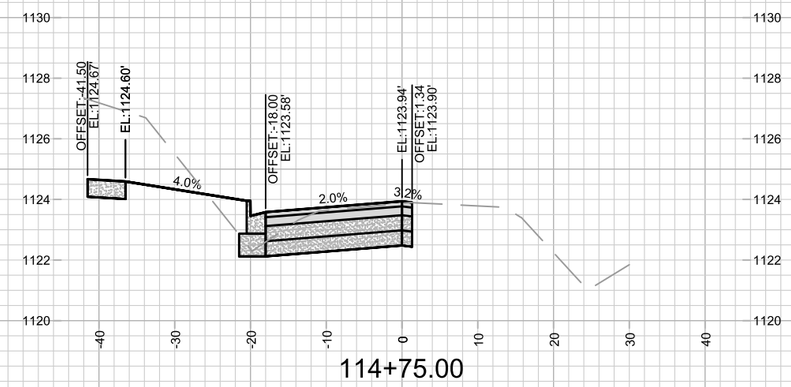

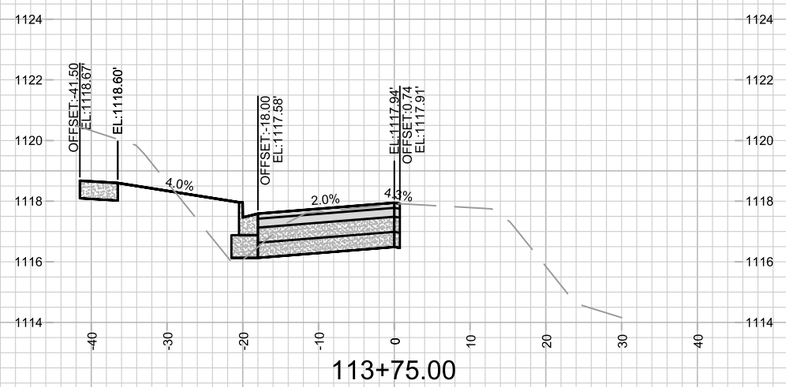

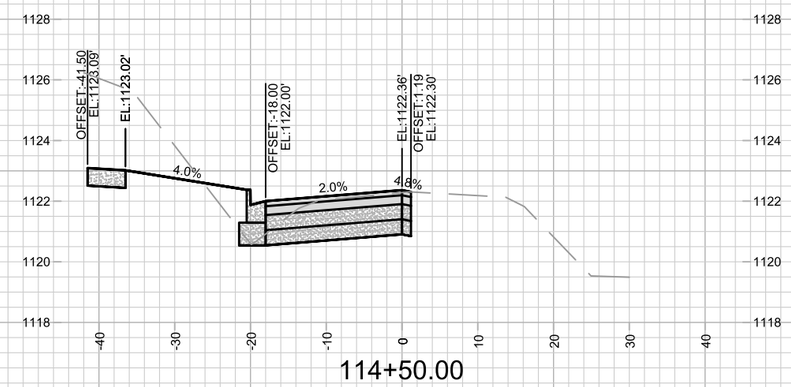

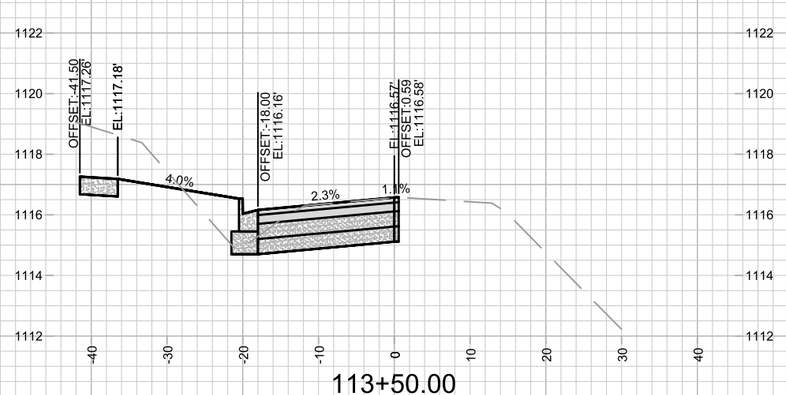

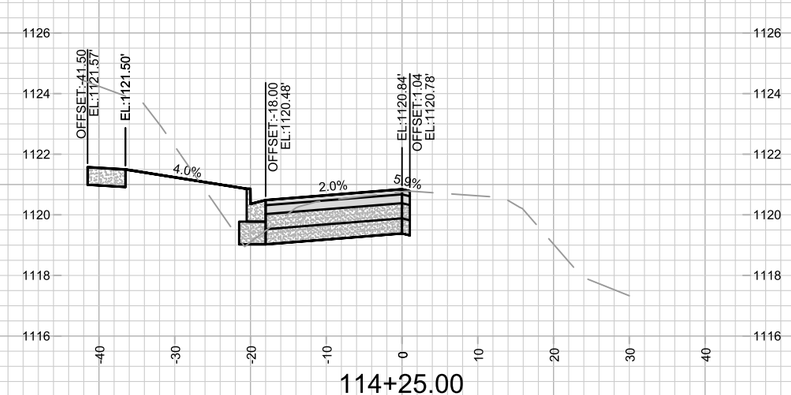

MARK	REVISION	DATE	BY
---	---	---	---
---	---	---	---
---	---	---	---
---	---	---	---

Designed By: ### Date: 10/12/2023 10:41 AM Scale: 1" = 20'

14344

MADISON, WI

CONTRACT NO: 9219

CROSS SECTIONS - VALLEY VIEW RD

FIRST ADDITION TO 1000 OAKS PHASE 11

M:\DESIGN\Projects\14344\CAD\Streets\14344EN-Xsections.dwg

14344

X-4

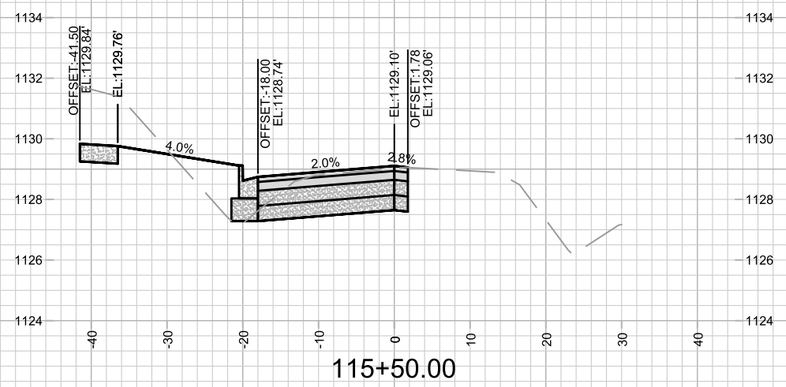

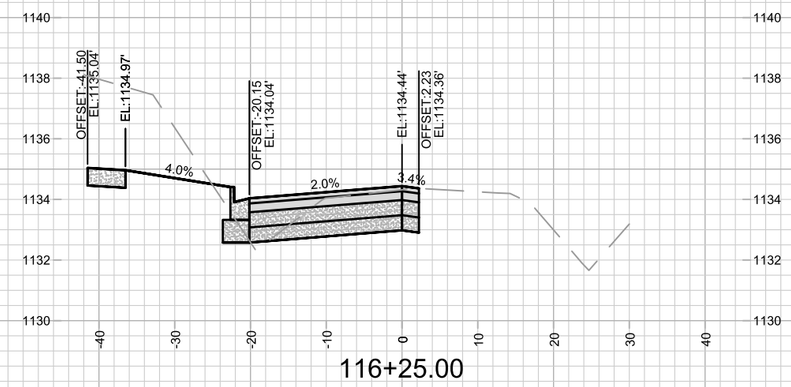

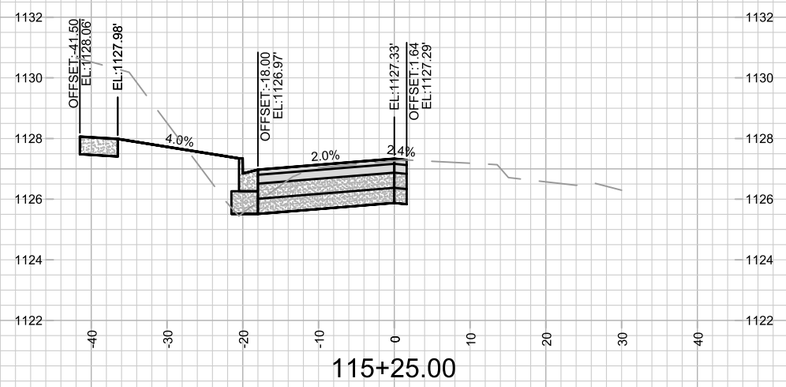

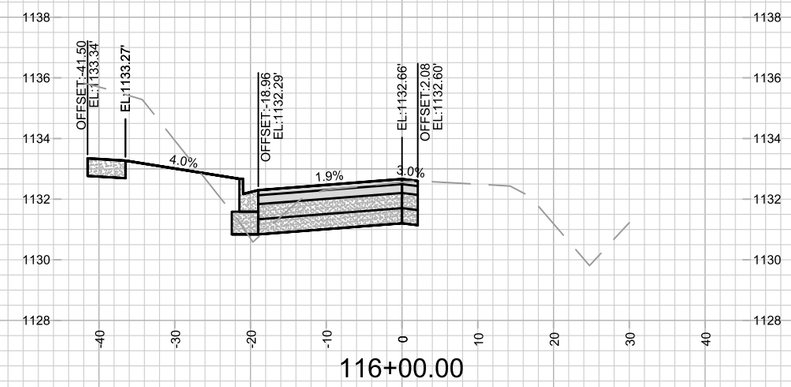

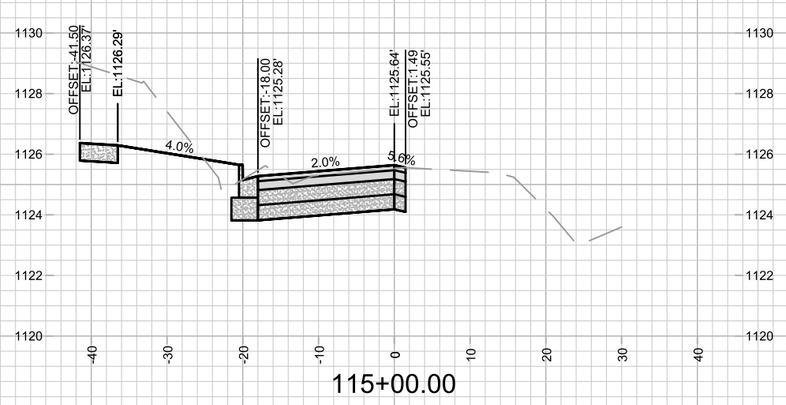

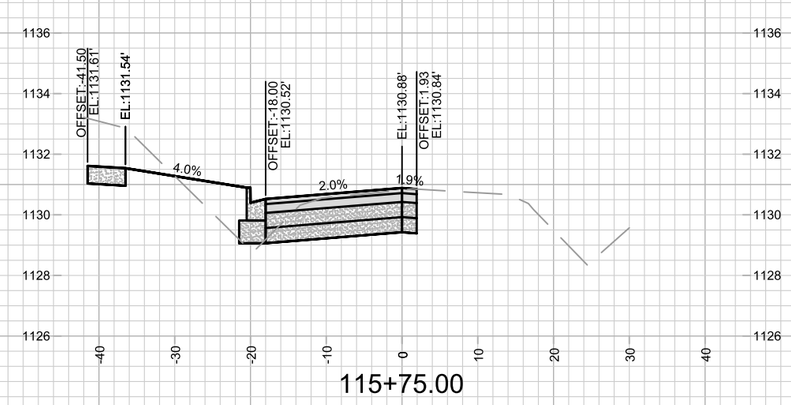

MARK	REVISION	DATE	BY
---	---	---	---
---	---	---	---
---	---	---	---
---	---	---	---

Designed By: ### Date: 10/12/2023 10:41 AM Scale: 1" = 20'

14344

X-5

14344

MADISON, WI

CONTRACT NO: 9219

CROSS SECTIONS - VALLEY VIEW RD

FIRST ADDITION TO 1000 OAKS PHASE 11

M:\DESIGN\Projects\14344\CAD\Streets\14344EN-Xsections.dwg

CITY OF MADISON WISCONSIN

14344

X-5

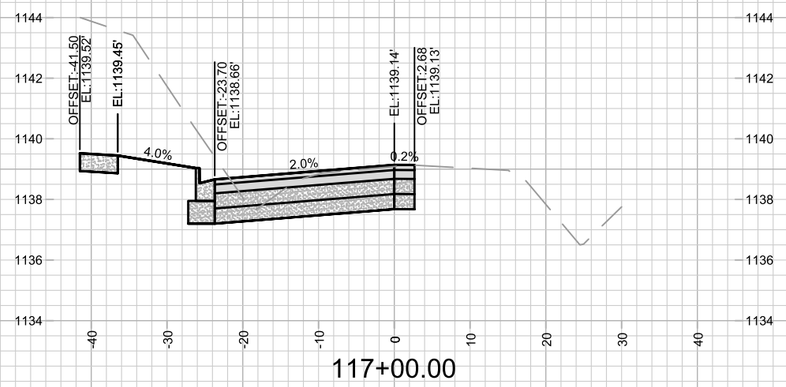

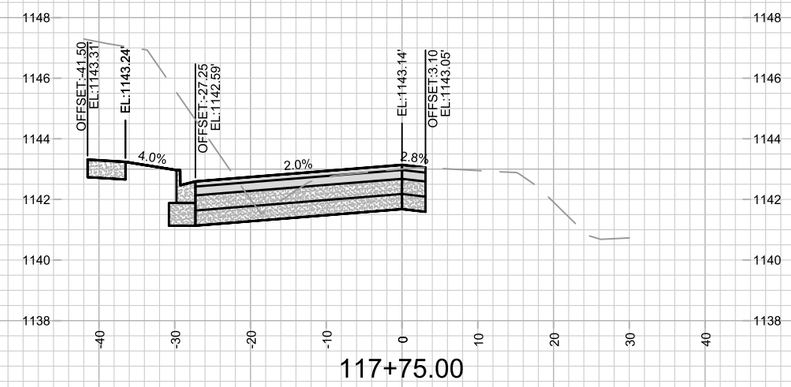

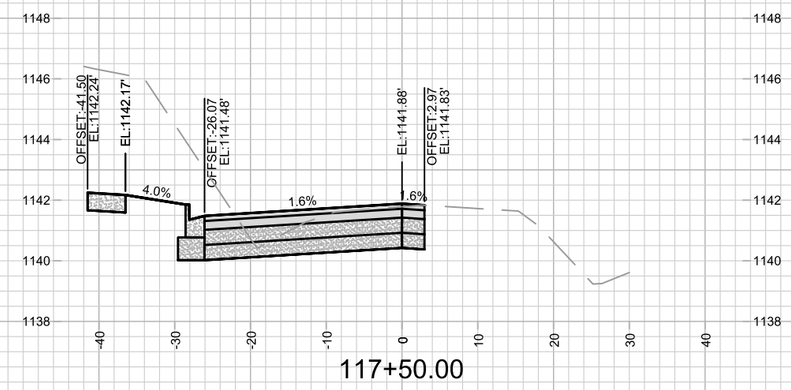

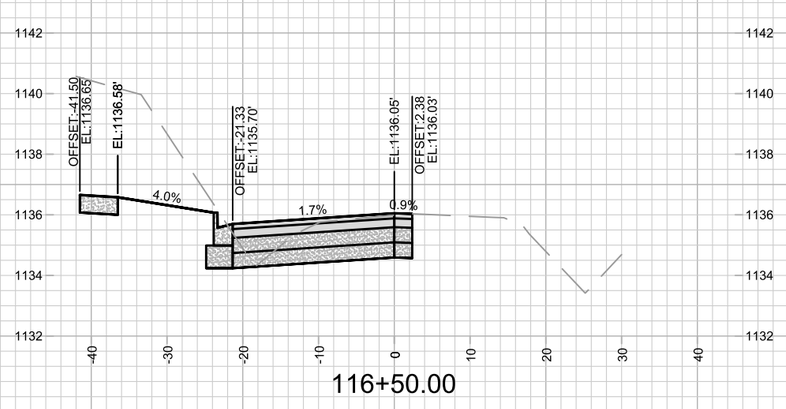

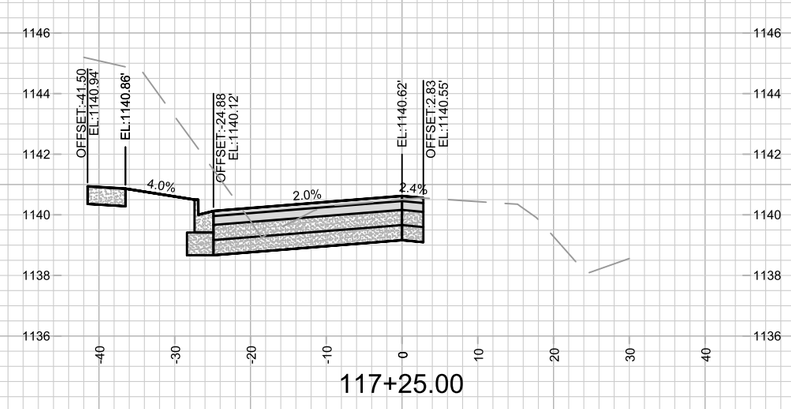

MARK	REVISION	DATE	BY
---	---	---	---
---	---	---	---
---	---	---	---
---	---	---	---

Designed By: #### Date: 10/12/2023 10:42 AM Scale: 1" = 20'

14344

MADISON, WI

CONTRACT NO: 9219

CROSS SECTIONS - VALLEY VIEW RD

FIRST ADDITION TO 1000 OAKS PHASE 11

M:\DESIGN\Projects\14344\CAD\Streets\14344EN-Xsections.dwg

14344

X-6

118+50.00

119+25.00

118+25.00

119+00.00

118+00.00

118+75.00

MARK	REVISION	DATE	BY
---	---	---	---
---	---	---	---
---	---	---	---
---	---	---	---

Designed By: ### Date: 10/12/2023 10:42 AM Scale: 1" = 20'

14344

MADISON, WI

CONTRACT NO: 9219

CROSS SECTIONS - VALLEY VIEW RD

FIRST ADDITION TO 1000 OAKS PHASE 11

M:\DESIGN\Projects\14344\CAD\Streets\14344EN-Xsections.dwg

14344

X-7

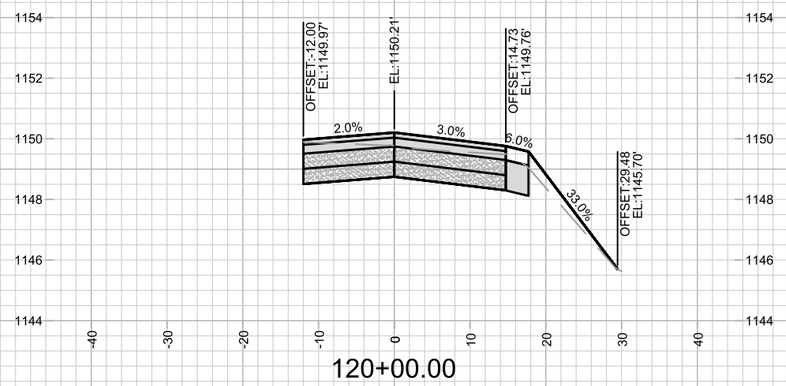

120+00.00

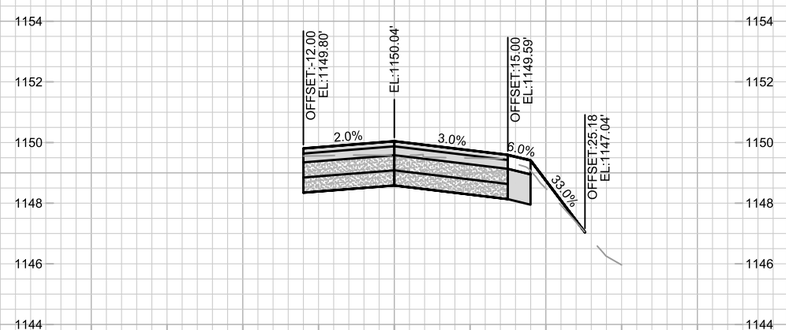

119+75.00

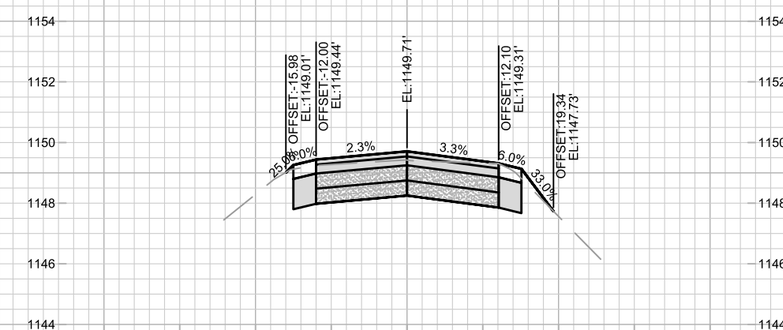

120+50.00

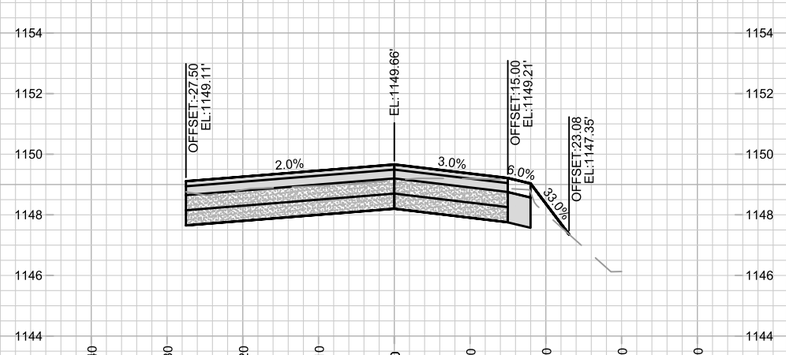

119+50.00

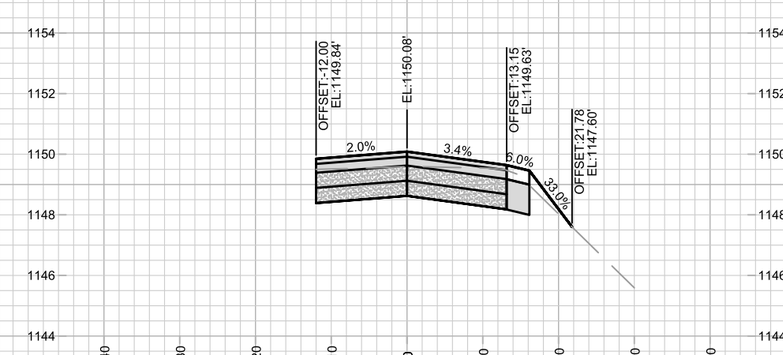

120+25.00

MARK	REVISION	DATE	BY
---	---	---	---
---	---	---	---
---	---	---	---
---	---	---	---

Designed By: ### Date: 10/12/2023 10:42 AM Scale: 1" = 20'

14344

MADISON, WI

CONTRACT NO: 9219

CROSS SECTIONS - VALLEY VIEW RD

FIRST ADDITION TO 1000 OAKS PHASE 11

M:\DESIGN\Projects\14344\CAD\Streets\14344EN-Xsections.dwg

14344

X-8

MARK	REVISION	DATE	BY
---	---	---	---
---	---	---	---
---	---	---	---
---	---	---	---

Designed By: ### Date: 10/12/2023 10:42 AM Scale: 1" = 20'

14344

MADISON, WI

CONTRACT NO: 9219

CROSS SECTIONS - S POINT RD

FIRST ADDITION TO 1000 OAKS PHASE 11

M:\DESIGN\Projects\14344\CAD\Streets\14344EN-Xsections.dwg

14344

X-9

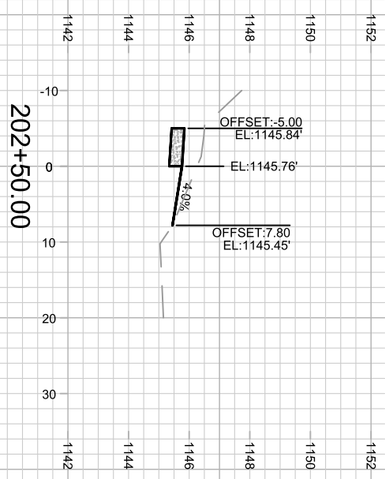

X-10

14344

CROSS SECTIONS - S POINT RD 14344

FIRST ADDITION TO 1000 OAKS PHASE 11 MADISON, WI

M:\DESIGN\Projects\14344\CAD\Streets\14344EN-Xsections.dwg CONTRACT NO: 9219

MARK	REVISION	DATE	BY
---	---	---	---
---	---	---	---
---	---	---	---
---	---	---	---

Designed By: ### | Date: 10/12/2023 10:42 AM | Scale: 1" = 20'

14344 X-10

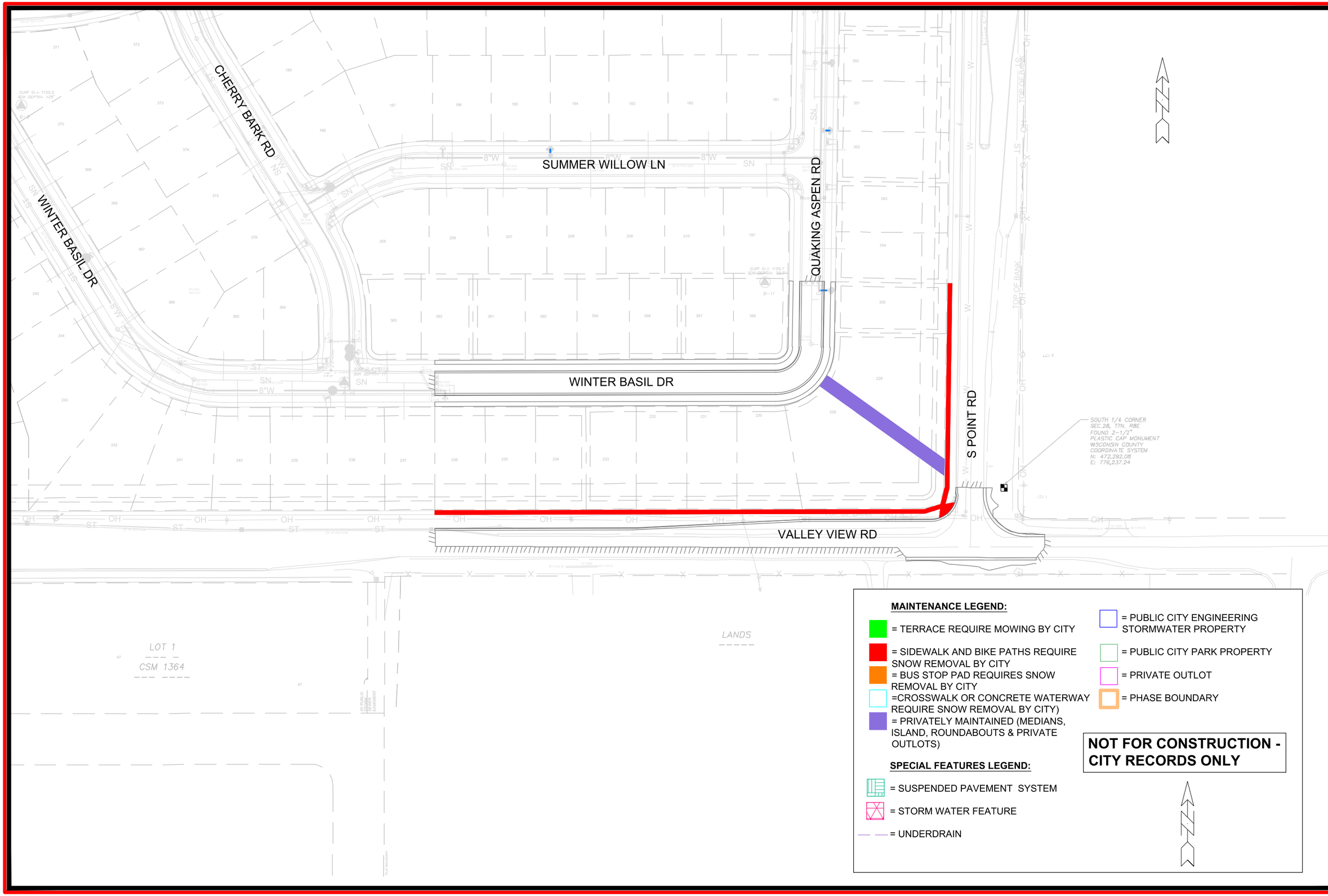

MARK	REVISION	DATE	BY
---	---	---	---
---	---	---	---
---	---	---	---
---	---	---	---

Designed By: #### Date: 9/29/2023 10:50 AM Scale: ########

14344

MADISON, WI

CONTRACT NO: 9219

MAINTENANCE PLAN

FIRST ADDITION TO 1000 OAKS PHASE 11

M:\DESIGN\Projects\14344\CAD\Streets\14344EN-Maintenance.dwg

14344

MN-1