CITY OF MADISON

CITY ENGINEERING DIVISION
DEPARTMENT OF PUBLIC WORKS
PLAN OF PROPOSED IMPROVEMENT

Madison, Wisconsin

PUBLIC IMPROVEMENT PROJECT APPROVED

NOVEMBER 22, 2022

BY THE COMMON COUNCIL OF MADISON, WISCONSIN

PUBLIC IMPROVEMENT DESIGN APPROVED BY:

Jul 18, 2023

City Engineer — Date

4649 VERONA ROAD

CITY PROJECT NO. 14774
CONTRACT NO. 9231

INDEX OF SHEETS

SHEET NO.	D1	GENERAL NOTES
SHEET NO.	D2-D4	TYPICAL SECTIONS
SHEET NO.	E1	ELECTRICAL PLAN
SHEET NO.	ST2	DETAILED BIOFILTER LAYOUT & ELEVATION PLAN
SHEET NO.	ST4-ST5	BIOFILTER DETAILS
SHEET NO.	O1	PROJECT OVERVIEW
SHEET NO.	P1-P3	STREET PLAN & PROFILE
SHEET NO.	U1-U2	UTILITIES PLAN & PROFILE
SHEET NO.	U3	SANITARY SEWER SCHEDULE
SHEET NO.	U4	STORM SEWER SCHEDULE
SHEET NO.	W1	WATER PLAN & PROFILE
SHEET NO.	W2	WATER IMPACT PLAN
SHEET NO.	W3	WATER ESTIMATE OF MATERIALS
SHEET NO.	X1-X8	CROSS SECTIONS
SHEET NO.	L1	STREET TREE PLANTING PLAN
SHEET NO.	MN1	MAINTENANCE PLAN

PROJECT LOCATION

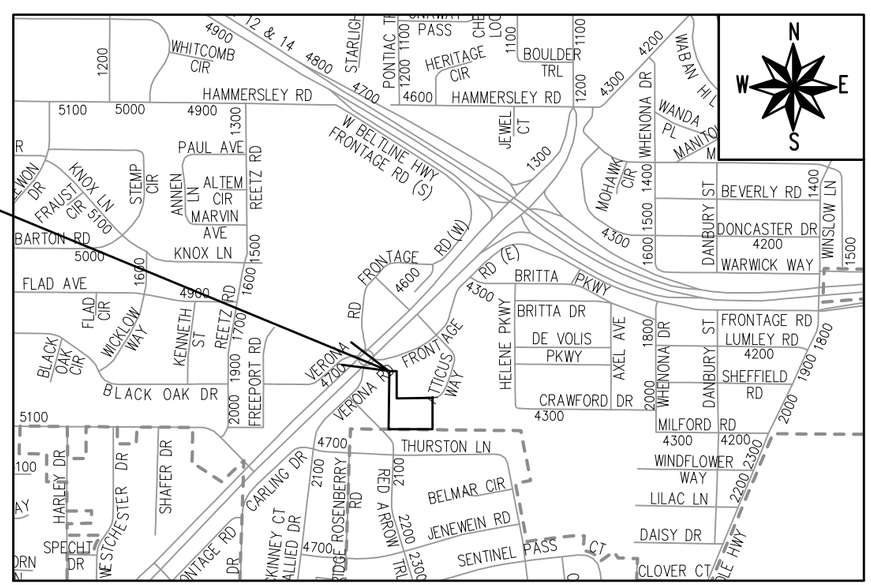

ELECTRICAL DESIGNED BY:	STREET DESIGNED BY:
WISCONSIN GRETCHEN M AVILES PINEIRO E-47473 MADISON WI PROFESSIONAL ENGINEER — Jul 18, 2023	WISCONSIN FADI B EL MUSA GONZALEZ E-47872 MADISON WI PROFESSIONAL ENGINEER — Jul 18, 2023
SANITARY SEWER DESIGNED BY:	STORM SEWER DESIGNED BY:
WISCONSIN MARK D. MODER E-33979 MADISON WI PROFESSIONAL ENGINEER — Jul 18, 2023	WISCONSIN JANET SCHMIDT E-34681 MADISON WI PROFESSIONAL ENGINEER — Jul 18, 2023
STREET GEOMETRICS DESIGNED BY:	STORM WATER FEATURES DESIGNED BY:
WISCONSIN THOMAS A. MOHR E-42481 MADISON WI PROFESSIONAL ENGINEER — Jul 19, 2023	WISCONSIN MATTHEW HAASE 46019-6 SUN PRAIRIE WI PROFESSIONAL ENGINEER — Jul 18, 2023
WATER DESIGNED BY:	
WISCONSIN ADAM R. WIEDERHOEFT E-41559 MADISON WI PROFESSIONAL ENGINEER — Jul 18, 2023	

PLOT SCALE: 1:1_XREF
PLOT NAME: ----
REV. DATE: 7/6/2023 2:42 PM
ORIGINATOR: CITY_OF_MADISON

FILE NAME: M:\DESIGN\Projects\14774\CAD\Streets\14774EN-TitleSheet.dwg
DATE: 7/6/2023 2:45 PM

THE LOCATION AND INFORMATION FOR PROPOSED NEW TREES, IN THE PUBLIC RIGHT OF WAY OR ON PUBLIC LANDS ARE APPROXIMATE AND ARE SHOWN FOR REFERENCE ONLY. THE LOCATIONS, SPECIFICATIONS AND PLANTING METHODS OF ALL PROPOSED NEW OR REPLACEMENT TREES IN THE PUBLIC RIGHT OF WAY OR ON PUBLIC LANDS SHALL BE APPROVED BY THE CITY FORESTER PRIOR TO INSTALLATION.

NO TREES IN THE RIGHT OF WAY OR ON PUBLIC LANDS SHALL BE TRIMMED, PRUNED, REMOVED OR ADVERSELY AFFECTED IN ANY WAY UNTIL THE DEVELOPER HAS RECEIVED WRITTEN PERMISSION FROM THE CITY ENGINEER OR CITY FORESTER. SAID WRITTEN PERMISSION SHALL INCLUDE LANGUAGE INDICATING THAT SECTION 10.101 OF THE MADISON GENERAL ORDINANCES AND ADMINISTRATIVE PROCEDURE MEMORANDUM NO. 6-2, REFERRING TO NOTIFICATION OF PROPERTY OCCUPANTS AND/OR OWNERS, HAS BEEN COMPLIED WITH.

DEVELOPER MUST SUBMIT A TRAFFIC CONTROL PLAN TO CITY TRAFFIC ENGINEERING AT LEAST 14 DAYS PRIOR TO THE START OF WORK. WORK SHALL NOT PROCEED UNTIL AN APPROVED TRAFFIC CONTROL PLAN IS IN PLACE.

CONVENTIONAL SIGNS
FIELD VERIFY ALL UTILITY LOCATIONS

GAS	G
STORM SEWER	ST
SANITARY SEWER	SAN
WATER	W
BURIED ELECTRIC	E
OVERHEAD ELECTRIC	OH
POWER POLE	
ADA COMPLIANT RAMP W/ DETECTABLE WARNING FIELD	
COMBUSTIBLE FLUIDS	CAUTION

UNDERDRAINS SHALL BE INSTALLED PER STANDARD DETAIL DRAWING 4.05 FOR 75' ON EACH SIDE OF THE LOW POINT, OR TO THE NEAREST CURB HIGH POINT. ALL UNDERDRAIN SHALL BE WRAPPED.

ALL GUTTERS SHALL DRAIN WITH A MINIMUM GRADE OF 0.5% TOWARD STORM SEWER INLETS.

ALL DITCHES SHALL DRAIN WITH A MINIMUM GRADE OF 0.5%

THE CROSS SLOPE OF SIDEWALKS AND BARRIER FREE SIDEWALK CURB RAMPS SHALL TYPICALLY BE 1.5%. THE LONGITUDINAL GRADE OF BARRIER FREE SIDEWALK CURB RAMPS SHALL NOT EXCEED 8.33%. ALL SIDEWALK RAMPS SHALL BE CONSTRUCTED ACCORDING TO S.D.D. 3.04. AT ALL OTHER LOCATIONS THE LONGITUDINAL GRADE OF SIDEWALKS SHALL NOT EXCEED 5.0 % OR THE ADJACENT STREET GRADE WHICHEVER IS GREATER NOR BE LESS THAN 0.5% AND SHALL DRAIN TOWARD STORM SEWER INLETS. SIDE SLOPES WITHIN TEN FEET OF A PUBLIC SIDEWALK SHALL NOT EXCEED 4:1. ALL SIDEWALK AND SIDEWALK RAMP ELEVATIONS AND GRADES SHALL BE FIELD VERIFIED AND SET TO COMPLY WITH THE CITY OF MADISON STANDARD SPECIFICATIONS AND THE A.D.A. GUIDELINES.

OBTAIN A PRINT OUT OF THE ALIGNMENTS FROM THE CITY PROJECT ENGINEER PRIOR TO STAKING THIS PROJECT. THE CITY PROJECT ENGINEER IS IKE OKAFOR, EMAIL: IOKAFOR@CITYOFMADISON.COM

CURB STATION AND OFFSETS SHALL BE TO THE EDGE OF PAVEMENT UNLESS OTHERWISE INDICATED. CURB ELEVATIONS SHALL BE TO THE EDGE OF PAVEMENT UNLESS OTHERWISE INDICATED.

POWER POLES AND OTHER OBSTRUCTIONS SHALL BE MOVED TO PROVIDE 2 FEET MINIMUM OF CLEAR DISTANCE FROM ANY FACE OF CURB OR EDGE OF SIDEWALK UNLESS OTHERWISE INDICATED ON THE PLANS.

ANY INFORMATION SHOWN ON THIS PLAN, WHICH IS NOT PART OF THIS RIGHT-OF-WAY PROJECT, IS PRELIMINARY AND NOT FOR CONSTRUCTION.

THERE MAY BE EXISTING UTILITIES OR OTHER FEATURES WHICH ARE EITHER NOT SHOWN OR SHOWN INCORRECTLY ON THIS PLAN. IT IS THE RESPONSIBILITY OF THE DEVELOPER TO LOCATE AND IDENTIFY ALL UTILITIES AND TOPOGRAPHY WHICH MAY AFFECT THE CONSTRUCTION OF THESE IMPROVEMENTS.

ALL PERMANENT SIGNING AND POSTING WILL BE DETERMINED AND PROVIDED BY THE TRAFFIC ENGINEERING DIVISION, FOLLOWING CONSTRUCTION OF THESE IMPROVEMENTS.

THE DEVELOPER SHALL PROVIDE, INSTALL AND MAINTAIN ALL STREET END BARRICADES, SIGNING AND TRAFFIC CONTROL, AS REQUIRED BY THE CITY TRAFFIC ENGINEER.

PAVEMENT SAWCUTS SHALL BE AS DIRECTED BY THE CITY CONSTRUCTION ENGINEER. SAWCUTS SHOWN ON THE PLAN ARE APPROXIMATE.

CURB ON CUL DE SACS SHALL BE INSTALLED ACCORDING TO S.D.D 3.05.

ALL WORK IN THE RIGHT OF WAY AND PUBLIC EASEMENTS SHALL BE IN ACCORDANCE WITH THE CITY OF MADISON STANDARD SPECIFICATIONS FOR PUBLIC WORKS CONSTRUCTION LATEST EDITION.

ALL PROPOSED IMPROVEMENTS IN THE RIGHT-OF-WAY ARE BASED ON SURVEY DATA PROVIDED BY THE DEVELOPER OR ITS CONSULTANT. IN THE CASE THAT THE PROPOSED IMPROVEMENTS CAN NOT BE INSTALLED PER THESE PLANS OR THE CITY OF MADISON STANDARD SPECIFICATION FOR PUBLIC WORKS CONSTRUCTION, LATEST EDITION, THE DEVELOPER SHALL BE RESPONSIBLE FOR THE COST OF EXTRA WORK DUE TO INACCURACIES OF THE SURVEY.

ALL UTILITY VERIFICATIONS AND ACCURACY OF THE DRAWINGS ARE THE RESPONSIBILITY OF THE DEVELOPER. ANY CONFLICTS THAT ARISE FROM MISSING OR ERRONEOUS INFORMATION WILL BE AT THE EXPENSE OF THE DEVELOPER. NO PRECAST STRUCTURES WILL BE APPROVED FOR STORM OR SANITARY SEWER UNTIL ALL POTENTIAL UTILITY CONFLICTS ARE RESOLVED.

MARK	REVISION	DATE	BY
######	######	######	###
######	######	######	###
######	######	######	###
######	######	######	###

Designed By: IO
Date: 7/10/2023 10:49 AM
Scale:
14774
D-1

14774

MADISON, WI

CONTRACT NO: 9231

GENERAL NOTES

4649 VERONA ROAD

M:\DESIGN\Projects\14774\CAD\Streets\14774EN-Details.dwg

CITY OF MADISON WISCONSIN

14774

D-1

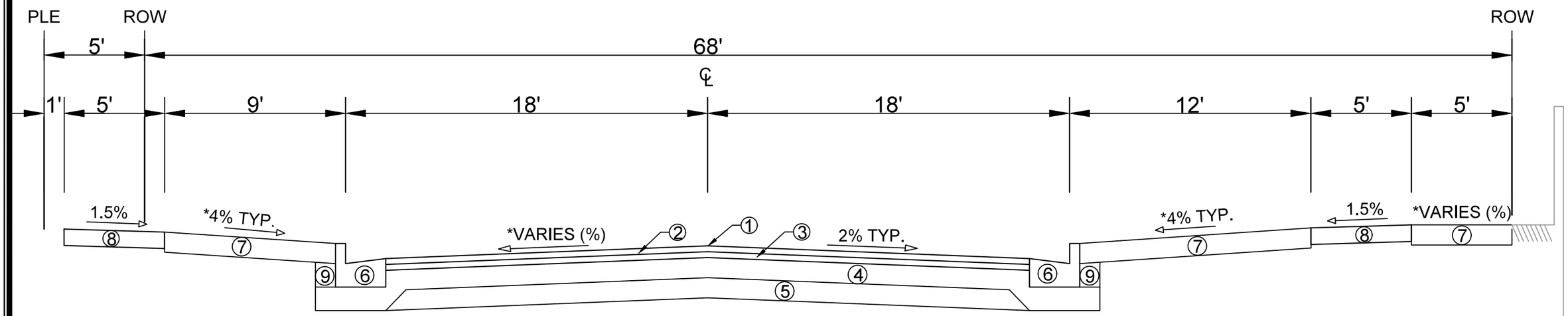

TYPICAL SECTION

ATTICUS WAY
STA 103+23 TO STA 104+90
(NOT TO SCALE)

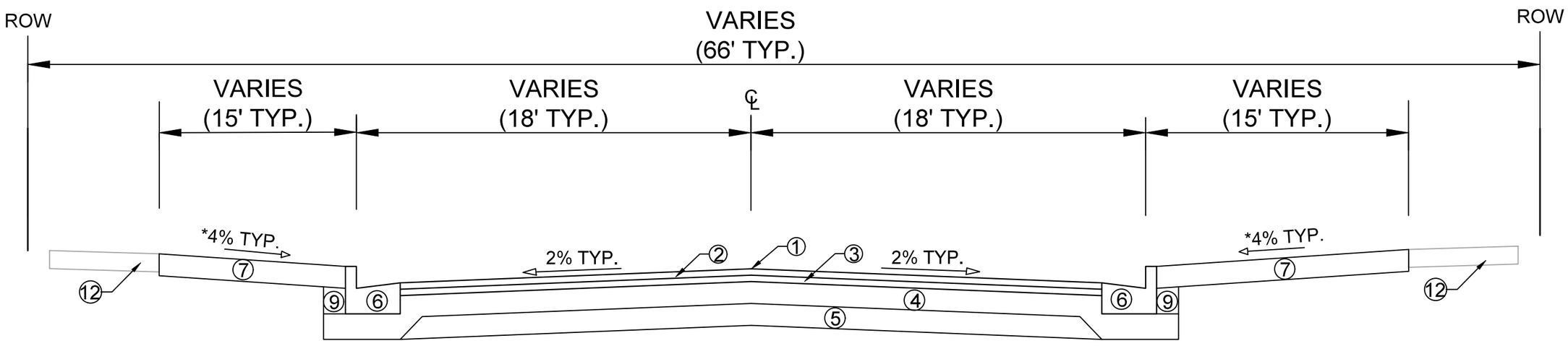

TYPICAL SECTION

ATTICUS WAY
STA 102+67 TO STA 103+23
(NOT TO SCALE)

① POINT REFERRED TO ON PROFILE
② 1.75" H.M.A. PAVEMENT- TYPE 4 LT 58-28 S
③ 1.75" H.M.A. PAVEMENT- TYPE 4 LT 58-28 S
④ 6" CRUSHED AGGREGATE BASE COURSE GRADATION 2
⑤ 6" CRUSHED AGGREGATE BASE COURSE GRADATION 1
⑥ CONCRETE CURB AND GUTTER TYPE 'A'.
⑦ 6" TOPSOIL, SEED AND MATTING
⑧ 5" CONCRETE SIDEWALK
⑨ FILL
⑩ SEE SHEETS D-4 TO D-6 FOR BIO-FILTER TERRACE DETAIL.
⑪ EXISTING GROUND, AND RETAINING WALL TO REMAIN (CAUTION MUST BE TAKEN DURING CONSTRUCTION).
⑫ EXISTING SIDEWALK TO REMAIN.

SPECIAL NOTES:

* SEE P AND X SHEETS FOR SLOPES.

MARK	REVISION	DATE	BY
#####	#####	#####	#####
#####	#####	#####	#####
#####	#####	#####	#####
#####	#####	#####	#####

Designed By: IO | Date: 7/10/2023 10:37 AM | Scale: | D-2
14774

14774
MADISON, WI
9231
CONTRACT NO:

TYPICAL SECTIONS
4649 VERONA ROAD
M:\DESIGN\Projects\14774\CAD\Streets\14774EN-Details.dwg

14774
D-2

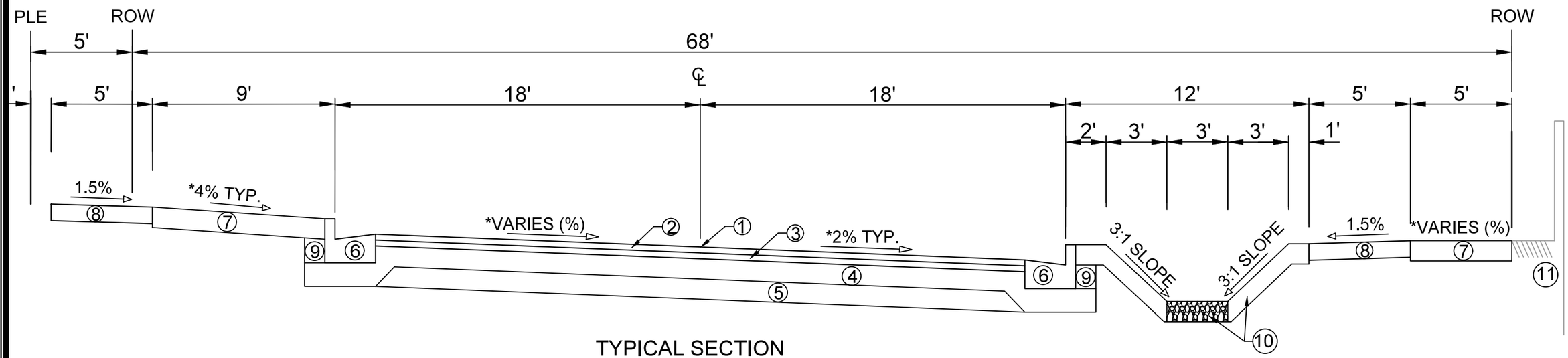

TYPICAL SECTION

ATTICUS WAY
STA 104+90 TO STA 106+64
(NOT TO SCALE)

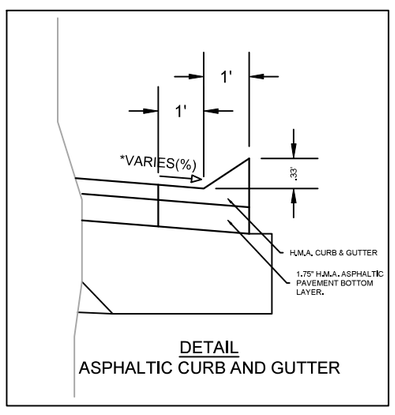

DETAIL
ASPHALTIC CURB AND GUTTER

① POINT REFERRED TO ON PROFILE
② 1.75" H.M.A. PAVEMENT- TYPE 4 LT 58-28 S
③ 1.75" H.M.A. PAVEMENT- TYPE 4 LT 58-28 S
④ 6" CRUSHED AGGREGATE BASE COURSE GRADATION 2
⑤ 6" CRUSHED AGGREGATE BASE COURSE GRADATION 1
⑥ CONCRETE CURB AND GUTTER TYPE 'A'.
⑦ 6" TOPSOIL, SEED AND MATTING
⑧ 5" CONCRETE SIDEWALK
⑨ FILL
⑩ SEE SHEETS D-4 TO D-6 FOR BIO-FILTER TERRACE DETAIL.
⑪ EXISTING GROUND AND RETAINING WALL TO REMAIN (CAUTION MUST BE TAKEN DURING CONSTRUCTION).

SPECIAL NOTES:

* SEE P AND X SHEETS FOR SLOPES.

MARK	REVISION	DATE	BY
#####	#####	#####	###
#####	#####	#####	###
#####	#####	#####	###
#####	#####	#####	###

Designed By: IO | Date: 7/10/2023 10:37 AM | Scale: | D-3
14774

14774
MADISON, WI
CONTRACT NO: 9231

TYPICAL SECTIONS
4649 VERONA ROAD
M:\DESIGN\Projects\14774\CAD\Streets\14774EN-Details.dwg

14774
D-3

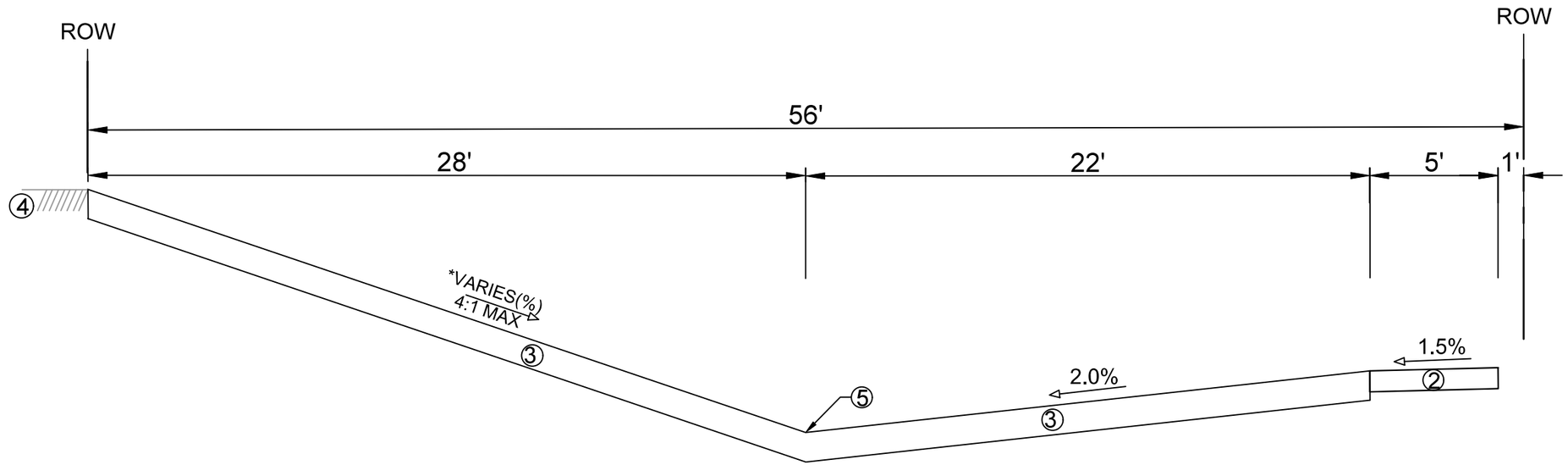

TYPICAL SECTION

SIDEWALK - ATTICUS WAY
STA 107+44 TO STA 108+75
(NOT TO SCALE)

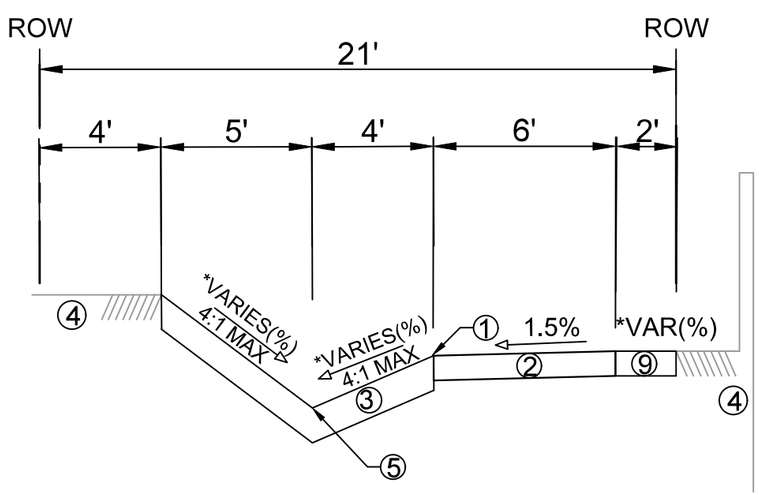

TYPICAL SECTION

SIDEWALK - VERONA ROAD
STA 204+53 TO STA 205+96
(NOT TO SCALE)

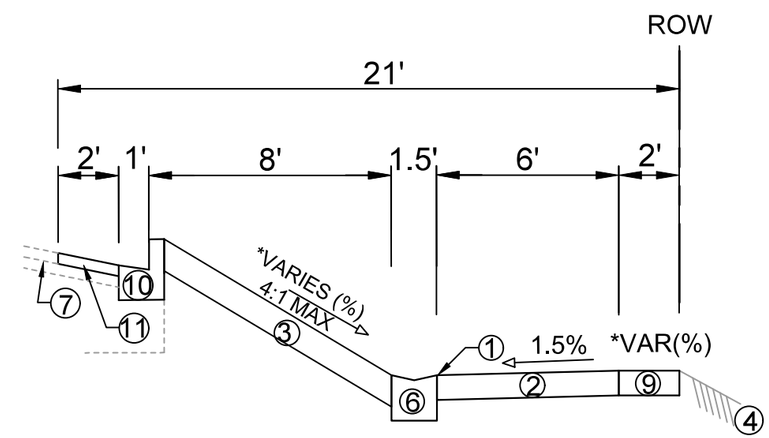

TYPICAL SECTION

SIDEWALK - VERONA ROAD
STA 205+96 TO STA 206+29
(NOT TO SCALE)

SPECIAL NOTES:

* SEE P AND X SHEETS FOR SLOPES.

① POINT REFERRED TO ON PROFILE
② 5" CONCRETE SIDEWALK
③ 6" TOPSOIL, SEED AND MATTING
④ EXISTING GROUND TO REMAIN.
⑤ DITCH FLOW LINE
⑥ ALLEY GUTTER PER S.D.D. 4.07
⑦ EXISTING PAVEMENT TO REMAIN
⑧ ASPHALTIC CURB AND GUTTER
⑨ 5" CONCRETE TERRACE
⑩ CONCRETE CURB & GUTTER TYPE 'G'
⑪ 2" H.M.A. PAVEMENT- TYPE 4 LT 58-28 S

MARK	REVISION	DATE	BY
#####	#####	#####	###
#####	#####	#####	###
#####	#####	#####	###
#####	#####	#####	###

Designed By: IO
14774
Date: 7/10/2023 10:22 AM
Scale:
D-4

14774
MADISON, WI
CONTRACT NO: 9231

TYPICAL SECTIONS
4649 VERONA ROAD
M:\DESIGN\Projects\14774\CAD\Streets\14774EN-Details.dwg

14774
D-4

GENERAL ELECTRICAL NOTES:

1. ALL LOCATIONS ARE APPROXIMATE. TRAFFIC ENGINEER SHALL APPROVE FINAL LOCATIONS INCLUDING SETBACK IN THE FIELD. AFTER CONTRACTOR SURVEYS STAKING, THE CONTRACTOR SHALL NOTIFY GRETCHEN AVILES PINEIRO (266-4899), AT LEAST 24-HOURS IN ADVANCE OF NEEDING BASE LOCATION MARKED.
2. THE CONTRACTOR SHALL DO ALL WORK IN ACCORDANCE WITH CITY OF MADISON STANDARD SPECIFICATIONS FOR PUBLIC WORKS CONSTRUCTION 2023 EDITION AND ALL ADDENDUMS THERETO. WWW.CITYOFMADISON.COM/ENGINEERING/DOCUMENTS/STANDARD-SPECIFICATIONS/COMPLETESPECBOOK.PDF
3. ALL CONDUIT SHALL BE PVC SCHEDULE 80 UNDER PAVEMENT OR SCHEDULE 40 OTHERWISE. PULL WIRE REQUIRED AS PER STANDARD SPECIFICATIONS.
4. THE CONTRACTOR SHALL CALL TROY VANT (395-1975) AT THE TRAFFIC ENGINEERING SHOP AT LEAST 24-HOURS IN ADVANCE OF INSTALLING STREETLIGHT UNITS AND BURYING CONDUIT TO ARRANGE FOR INSPECTION.
5. THE CONTRACTOR SHALL CALL TROY VANT (395-1975) PRIOR TO REMOVING OR CONNECTING TO EXISTING CONDUITS OR HANDHOLES. CONTRACTOR SHALL FIELD VERIFY CONDUIT MATERIAL & SIZE.
6. THE CONTRACTOR SHALL ARRANGE FOR PICKUP OF THE FOLLOWING CITY MATERIALS: (2) STREET LIGHTING UNITS: 29' CONCRETE POLE, ARM & FIXTURE (GCM2-30H-MV-WW-2R-GY-530-PCR7-WL-SC)

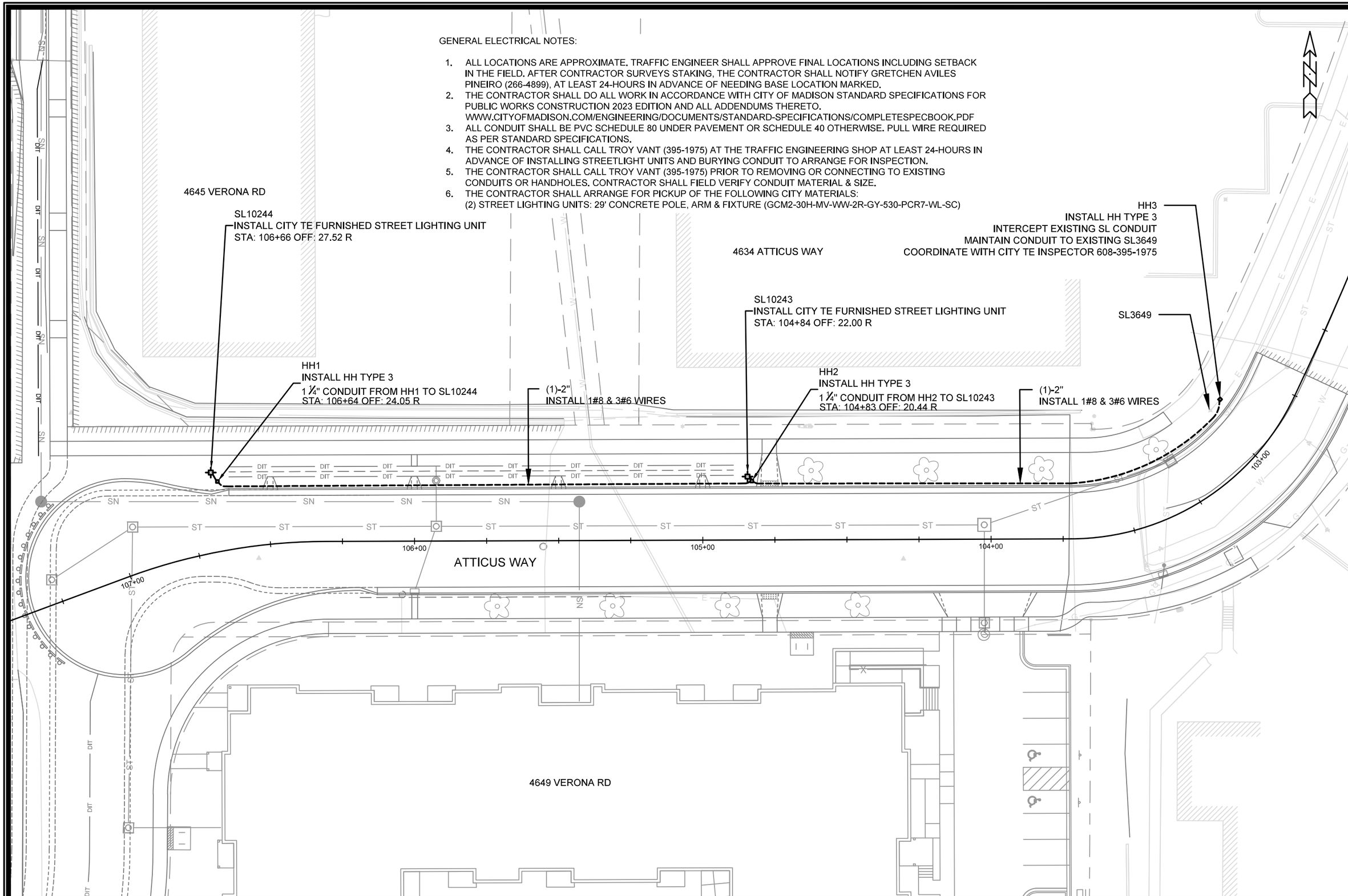

MARK	REVISION	DATE	BY

Designed By: GMA | Date: 1/7/2023 8:42 AM | Scale: 1" = 30'

14774

MADISON, WI

CONTRACT NO: 9231

ELECTRICAL PLAN

4649 VERONA ROAD

M:\DESIGN\Projects\14774\CAD\Traffic\14774TE-Electrical.dwg

14774

E-1

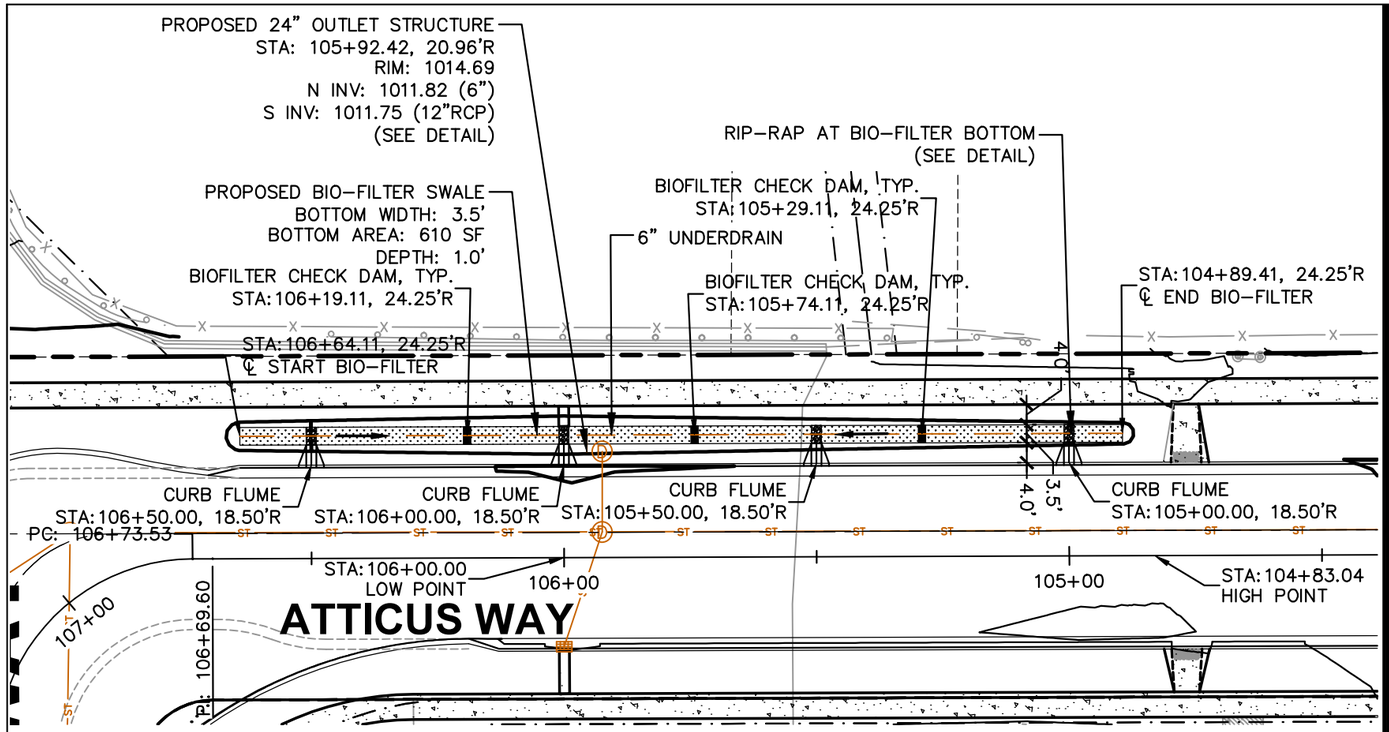

BIOFILTER LAYOUT PLAN

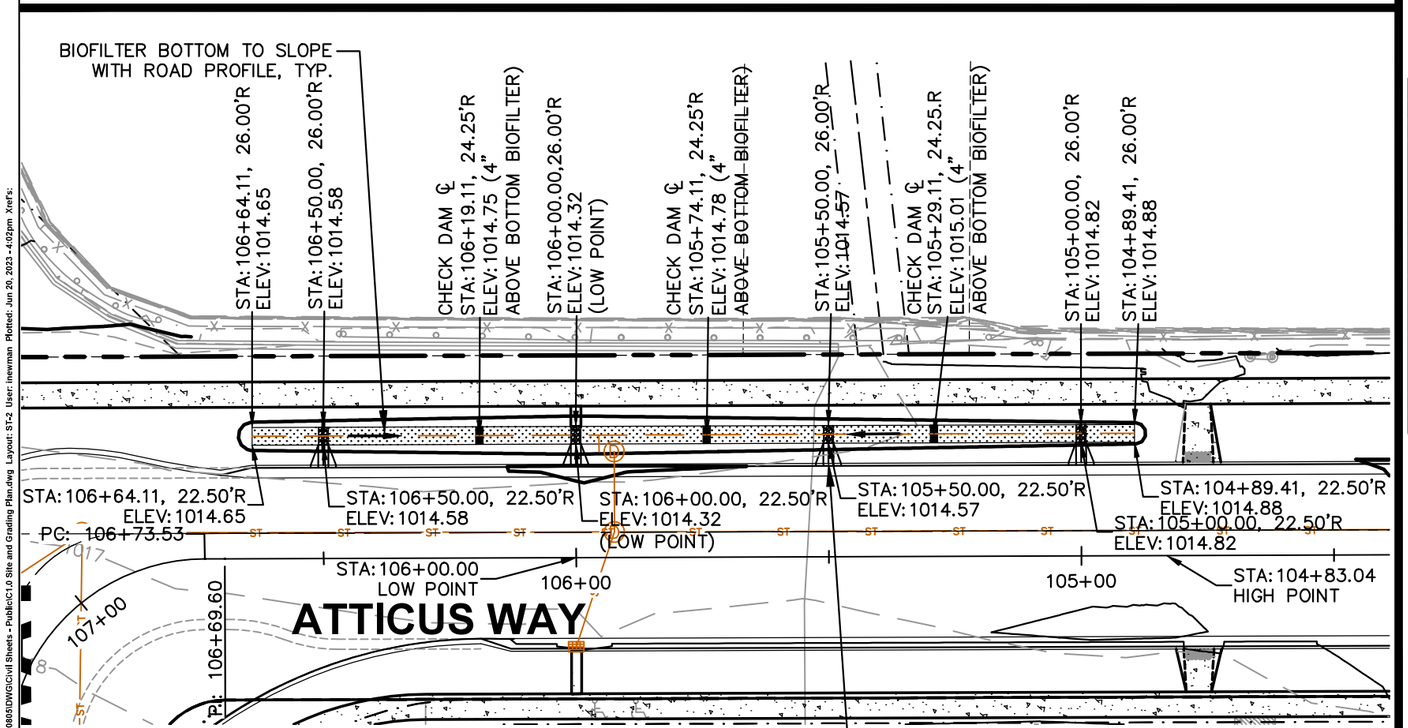

BIOFILTER ELEVATIONS PLAN

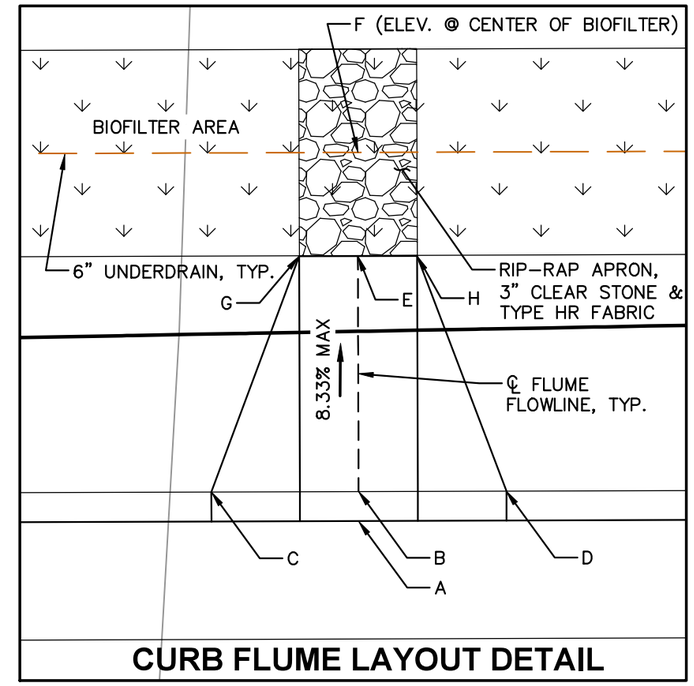

CURB FLUME LAYOUT DETAIL

NOTE: LETTERS CORRESPOND TO TABLE BELOW WITH DESCRIPTIONS AND ELEVATIONS OF POINTS.

CURB FLUME ELEVATIONS

DETAIL POINT ELEVATIONS/DESCRIPTIONS

Point	Point Description	Required Target Vertical Distance From Existing Flowing (ft)((in))	STA: 106+50 Elevation	STA: 106+00 Elevation	STA: 105+50 Elevation	STA: 105+00 Elevation
	Ex. EOG at CL of Flume	B + 0.125	1015.21	1014.96	1015.20	1015.45
A	Ex. Flow Line at CL of Flume	0	1015.08	1014.83	1015.07	1015.32
B	Pro. Gutter Flow Line at CL of Flume	B - 0.17'("2")	1014.91	1014.66	1014.90	1015.15
C	Edge of Flume @ Gutter (Uphill)	varies	1014.92	1014.67	1014.91	1015.16
D	Edge of Flume @ Gutter (Downhill)	varies	1014.90	1014.65	1014.89	1015.14
E	Bottom of Flume at CL	B - .3332'(4")	1014.75	1014.50	1014.74	1014.99
F	Bottom of Stone/Pond	E - 0.833'(10")	1013.91	1013.66	1013.90	1014.15
G	Edge of Flume @ Outfall (Upgradiant along street)	E + 0.17'(2")	1014.92	1014.67	1014.91	1015.16
H	Edge of Flume @ Outfall (Downgradiant along street)	E - 0.17'(2")	1014.58	1014.33	1014.57	1014.82

NOTE: LOCATION OF CURB FLUMES ARE BASED ON THE CENTRELINE FLOW LINE OF FLUME.

north

SCALE IN FEET

30' 0 30'

WISCONSIN
MATTHEW HAASE
46019-6
SUN PRAIRIE, WI
PROFESSIONAL ENGINEER
6/22/2023

JSD

CREATE THE VISION TELL THE STORY

jsdinc.com

IDAHO REGIONAL OFFICE
418 EAST LAKE SIDE AVENUE
COEUR D'ALENE ID 83814
P. 847.682.9420

CLIENT:
LINCOLN AVENUE CAPITAL MANAGEMENT LLC

CLIENT ADDRESS:
401 WILSHIRE BLVD #1070
SANTA MONICA, CA 90401

PROJECT:
ATTICUS WAY
CITY PROJECT #14774
CONTRACT #9231

PROJECT LOCATION:
4649 VERONA RD
MADISON, WI 53711

PLAN MODIFICATIONS:

#	Date:	Description:
1	04/20/23	PERMIT REVIEW
2	05/18/2023	NFC PLAN SET
3	06/21/2023	IFC PLAN SET
4		
5		
6		
7		
8		
9		
10		
11		
12		
13		
14		
15		

Designed By:
Reviewed By:
Approved By:

SHEET TITLE:
DETAILED BIO-FILTER LAYOUT & ELEVATIONS PLAN

SHEET NUMBER:
ST-2

JSD PROJECT NO: 21-10805

THESE PLANS AND DESIGNS ARE COPYRIGHT PROTECTED AND MAY NOT BE USED IN WHOLE OR IN PART WITHOUT THE WRITTEN CONSENT OF JSD PROFESSIONAL SERVICES, INC.

File: I:\2021\21\10805\DWG\Civil Sheets - Public\C1.0 Site and Grading Plan.dwg Layout: ST-2 User: inewman Plotted: Jun 20, 2023 - 4:02pm Xref's:

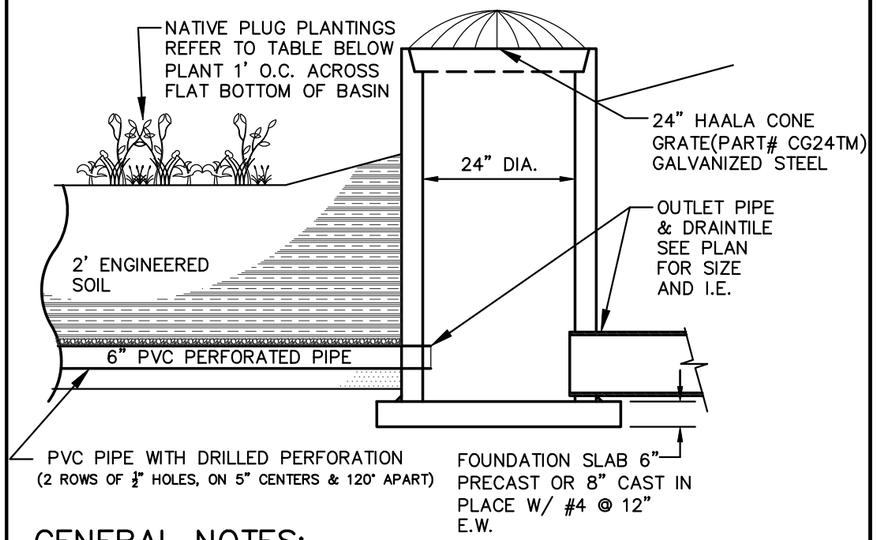

GENERAL NOTES:

1. GRATE SHALL BE IN BELL FITTING TO THE PRECAST STRUCTURE SPECIFICATIONS
2. GRATES SHALL BE AASHTO H20 LOAD RATED
3. PRECAST REINFORCED CONCRETE CATCH BASIN IS MANUFACTURED TO MEET ASTM C–478 AND AASHTO M199 SPECIFICATIONS
4. CATCH BASIN JOINT MATERIAL: CONSEAL CS–102 AND/OR CS–202 AS MANUFACTURED BY CONCRETE SEALANTS INC., WHICH MEETS OR EXCEEDS REQUIREMENTS OF FEDERAL SPECIFICATION SS–S–210 (210A), AASHTO M–198B AND ASTM C–990
5. PIPE TO CATCH BASIN CONNECTORS: KOR–N–SEAL AS MANUFACTURED BY NPC INC., WHICH MEETS OR EXCEEDS REQUIREMENTS OF ASTM C–923

24" DIA. OUTLET STRUCTURE

REV. 12–7–2018

N.T.S.

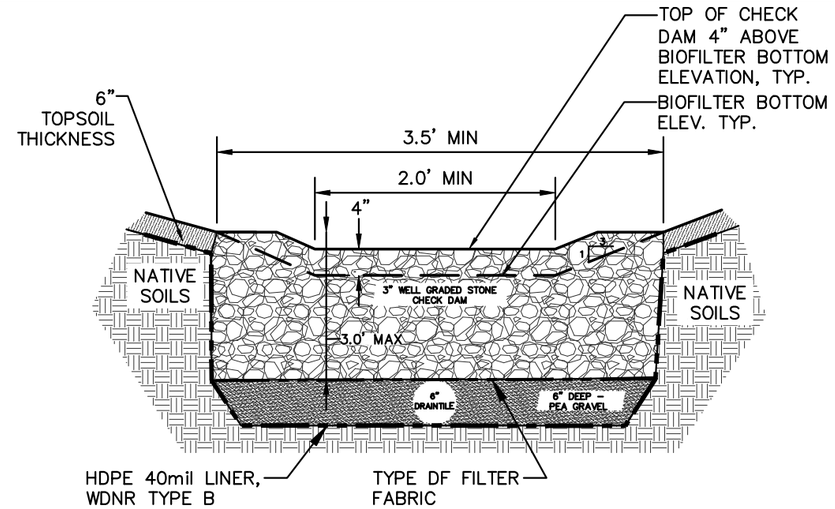

CROSS–SECTION "A–A"

GENERAL NOTES:

1. CHECK DAMS SHALL BE CONSTRUCTED OF A 3" WELL–GRADED STONE ANGULAR STONE. REFER TO PLAN FOR LOCATION.
2. EXTEND CHECK DAM ACROSS BIO–FILTER BOTTOM AND UPSIDE SLOPE TO TOP OF SLOPE. INSTALL 3" CLEAR STONE THE FULL DEPTH OF THE ENGINEERED SOIL LAYER. CHECK DAMS TO BE 2 FEET WIDE MINIMUM.

BIO-FILTER CHECK DAM

N.T.S.

Bio-Retention Basin Plug Plant Mix 612 sq. ft.

Botanical Name	Common Name	Quantity	Spacing
Permanent Grasses:			
Carex grayii	Common Bur Sedge	46	1'-0" On Center
Panicum virgatum	Switch Grass	47	1'-0" On Center
Spartina pectinata	Prairie Cord Grass	48	1'-0" On Center
Forbs:			
Asclepias incarnata	Swamp Milkweed	46	1'-0" On Center
Echinacea purpurea	Broad-Leaved Purple Coneflower	47	1'-0" On Center
Eryngium yuccifolium	Rattlesnake Master	48	1'-0" On Center
Eupatorium maculatum	Spotted Joe-Pye Weed	46	1'-0" On Center
Liatris spicata	Marsh Blazing Star	47	1'-0" On Center
Lobelia cardinalis	Cardinal Flower	48	1'-0" On Center
Monarda fistulosa	Wild Bergamot	46	1'-0" On Center
Penstemon digitalis	Foxglove Beardtongue	47	1'-0" On Center
Pycnanthemum virginianum	Common Mountain Mint	48	1'-0" On Center
Ratibida pinnata	Yellow Coneflower	48	1'-0" On Center
	TOTAL	**612**	

BIO-FILTER VEGETATION NOTES

1. MATERIALS – BIORETENTION BASIN PLUG PLANTINGS: PLUG PLANTINGS TO BE INSTALLED 1'–0" ON CENTER, MIXING SPECIES INTEGRALLY IN FLATS OF 20 AT A TIME. REFER TO WDNR PLUG PLANTING TECHNICAL STANDARDS FOR ROOTSTOCK AND INSTALLATION SPECIFICATIONS. REFER TO PLUG PLANTING LIST TO LEFT FOR PLANT TYPE AND QUANTITY.

2. **ALTERNATE MATERIALS** – BIORETENTION BASIN NATIVE VEGETATIVE MAT (NVM): AREAS SPECIFIED ON PLANS SHALL RECEIVE AGRECOL "RAINWATER RENEWAL" NATIVE VEGETATIVE MAT – DEGRADABLE CORE. CONTRACTOR SHALL CONTACT AGRECOL NATIVE NURSERY 16 WEEKS IN ADVANCE OF INSTALLATION FOR PROPER GROWING LEAD TIME. CONTRACTOR SHALL ASSUME AVAILABLE DELIVERY DATE TO BE BETWEEN MID–JUNE THROUGH THE END OF OCTOBER DUE TO THE NMV GROWING SEASON. REFER TO PRODUCT SPECIFICATIONS AND MANUFACTURERS RECOMMENDATIONS FOR INSTALLATION PROCEDURES.

WISCONSIN
MATTHEW HAASE
46019-6
SUN PRAIRIE, WI
PROFESSIONAL ENGINEER
6/22/2023

JSD

CREATE THE VISION TELL THE STORY

jsdinc.com

IDAHO REGIONAL OFFICE
418 EAST LAKE SIDE AVENUE
COEUR D'ALENE, ID 83814
P. 847.682.9420

CLIENT:
LINCOLN AVENUE CAPITAL MANAGEMENT LLC

CLIENT ADDRESS:
401 WILSHIRE BLVD #1070
SANTA MONICA, CA 90401

PROJECT:
ATTICUS WAY
CITY PROJECT #14774
CONTRACT #9231

PROJECT LOCATION:
4649 VERONA RD
MADISON, WI 53711

PLAN MODIFICATIONS:

#	Date:	Description:
1	04/20/23	PERMIT REVIEW
2	05/18/2023	NFC PLAN SET
3	06/21/2023	IFC PLAN SET
4		
5		
6		
7		
8		
9		
10		
11		
12		
13		
14		
15		

Designed By:
Reviewed By:
Approved By:

SHEET TITLE:
BIO-FILTER DETAILS

SHEET NUMBER:
ST-4

JSD PROJECT NO: 21-10805

THESE PLANS AND DESIGNS ARE COPYRIGHT PROTECTED AND MAY NOT BE USED IN WHOLE OR IN PART WITHOUT THE WRITTEN CONSENT OF JSD PROFESSIONAL SERVICES, INC.

File: I:\2021\21\10805\DWG\Civil Sheets - Public\C3.0 BIOFILTER DETAILS.dwg Layout: ST-4 User: lnewman Plotted: Jun 20, 2023 - 4:11pm XrefS:

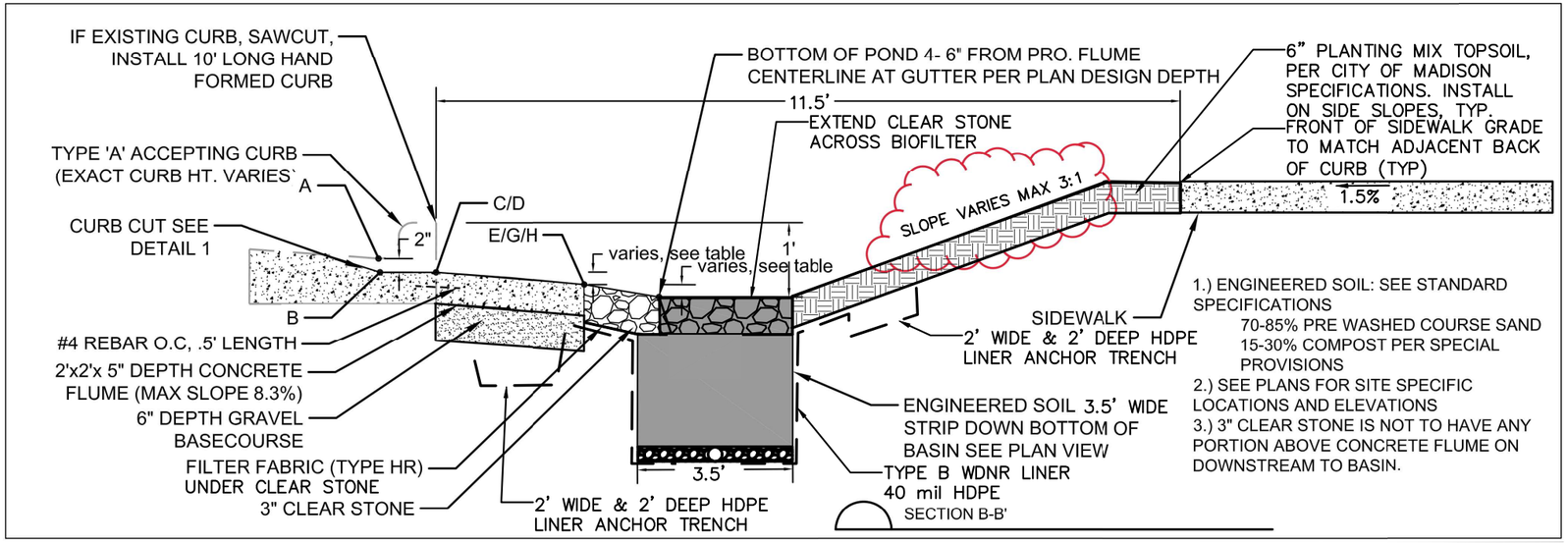

1.) ENGINEERED SOIL: SEE STANDARD SPECIFICATIONS
70-85% PRE WASHED COURSE SAND
15-30% COMPOST PER SPECIAL PROVISIONS
2.) SEE PLANS FOR SITE SPECIFIC LOCATIONS AND ELEVATIONS
3.) 3" CLEAR STONE IS NOT TO HAVE ANY PORTION ABOVE CONCRETE FLUME ON DOWNSTREAM TO BASIN.

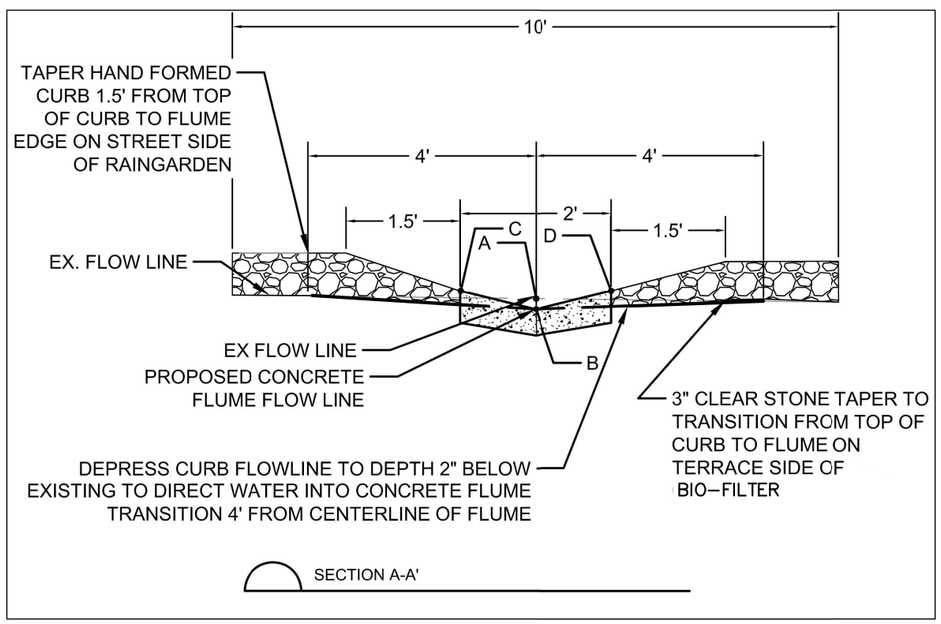

WISCONSIN
MATTHEW HAASE
46019-6
SUN PRAIRIE, WI
PROFESSIONAL ENGINEER
6/22/2023

JSD
CREATE THE VISION TELL THE STORY
jsdinc.com

IDAHO REGIONAL OFFICE
418 EAST LAKE SIDE AVENUE
COEUR D'ALENE, ID 83814
P. 847.682.9420

CLIENT:
LINCOLN AVENUE CAPITAL MANAGEMENT LLC

CLIENT ADDRESS:
401 WILSHIRE BLVD #1070
SANTA MONICA, CA 90401

PROJECT:
ATTICUS WAY
CITY PROJECT #14774
CONTRACT #9231

PROJECT LOCATION:
4649 VERONA RD
MADISON, WI 53711

PLAN MODIFICATIONS:

#	Date:	Description:
1	04/20/23	PERMIT REVIEW
2	05/18/2023	NFC PLAN SET
3	06/21/2023	IFC PLAN SET
4		
5		
6		
7		
8		
9		
10		
11		
12		
13		
14		
15		

Designed By:
Reviewed By:
Approved By:

SHEET TITLE:
BIO-FILTER DETAILS

SHEET NUMBER:
ST-5

JSD PROJECT NO: 21-10805

THESE PLANS AND DESIGNS ARE COPYRIGHT PROTECTED AND MAY NOT BE USED IN WHOLE OR IN PART WITHOUT THE WRITTEN CONSENT OF JSD PROFESSIONAL SERVICES, INC.

File: I:\2021\210805\DWG\Civil Sheets - Public\C3.0 BIOFILTER DETAILS.dwg Layout: ST-5 User: inewman Plotted: Jun 20, 2023 - 4:14pm Xrefs:

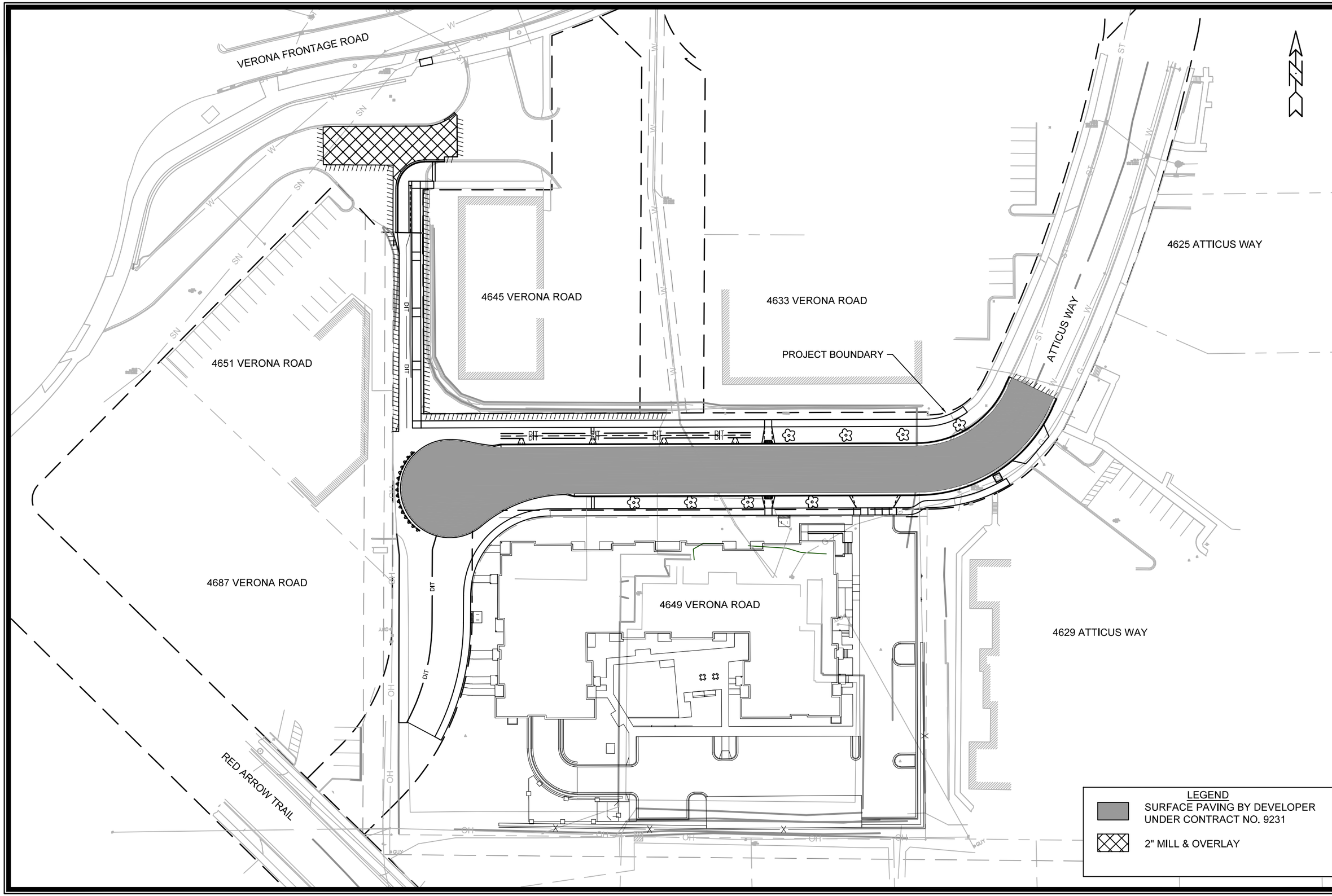

MARK	REVISION	DATE	BY

Designed By: IO
Date: 7/6/2023 8:54 AM
Scale: 1:60

14774

O-1

14774

MADISON, WI

CONTRACT NO: 9231

PROJECT OVERVIEW

4649 VERONA ROAD

M:\DESIGN\Projects\14774\CAD\Streets\14774EN-StreetLinework.dwg

CITY OF MADISON WISCONSIN

14774

O-1

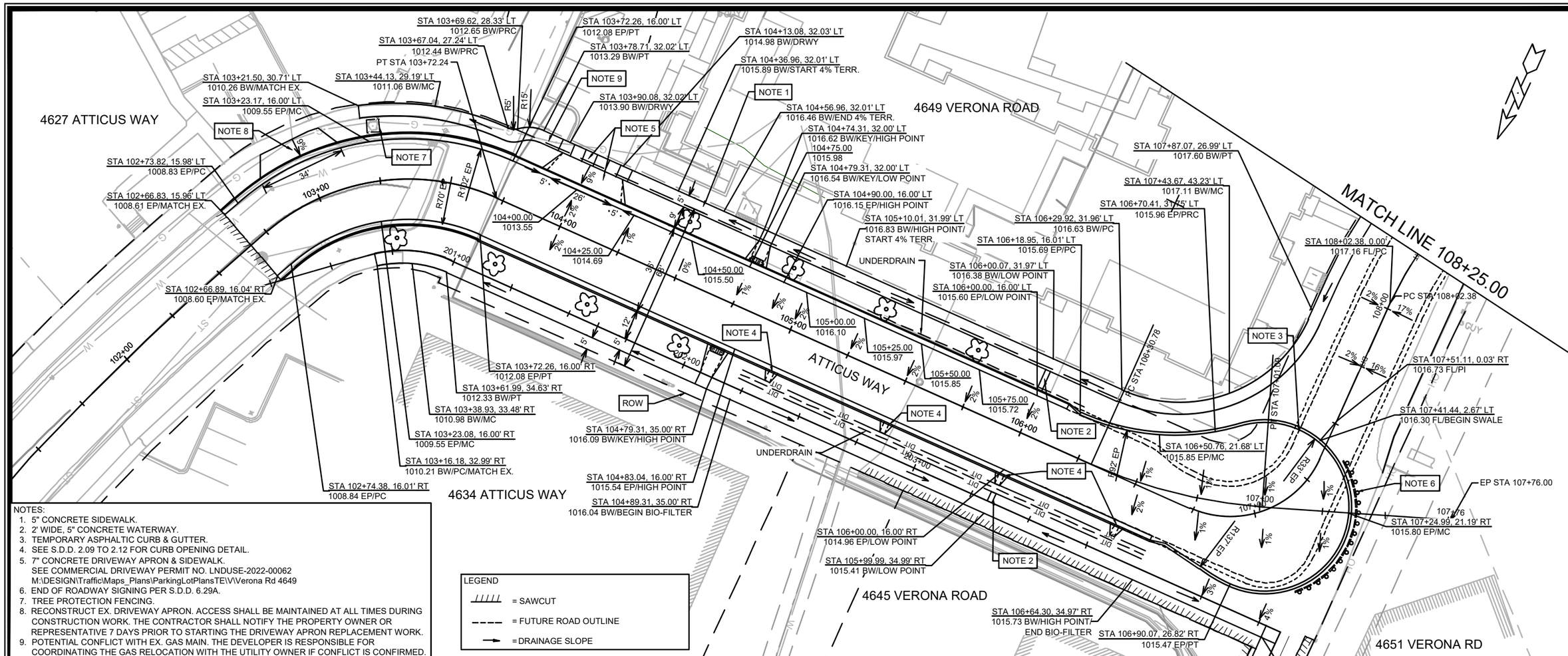

NOTES:

1. 5" CONCRETE SIDEWALK.
2. 2' WIDE, 5" CONCRETE WATERWAY.
3. TEMPORARY ASPHALTIC CURB & GUTTER.
4. SEE S.D.D. 2.09 TO 2.12 FOR CURB OPENING DETAIL.
5. 7" CONCRETE DRIVEWAY APRON & SIDEWALK.
   SEE COMMERCIAL DRIVEWAY PERMIT NO. LNDUSE-2022-00062
   M:\DESIGN\Traffic\Maps_Plans\ParkingLotPlansTE\V\Verona Rd 4649
6. END OF ROADWAY SIGNING PER S.D.D. 6.29A.
7. TREE PROTECTION FENCING.
8. RECONSTRUCT EX. DRIVEWAY APRON. ACCESS SHALL BE MAINTAINED AT ALL TIMES DURING CONSTRUCTION WORK. THE CONTRACTOR SHALL NOTIFY THE PROPERTY OWNER OR REPRESENTATIVE 7 DAYS PRIOR TO STARTING THE DRIVEWAY APRON REPLACEMENT WORK.
9. POTENTIAL CONFLICT WITH EX. GAS MAIN. THE DEVELOPER IS RESPONSIBLE FOR COORDINATING THE GAS RELOCATION WITH THE UTILITY OWNER IF CONFLICT IS CONFIRMED.

LEGEND

- = SAWCUT
- = FUTURE ROAD OUTLINE
- = DRAINAGE SLOPE

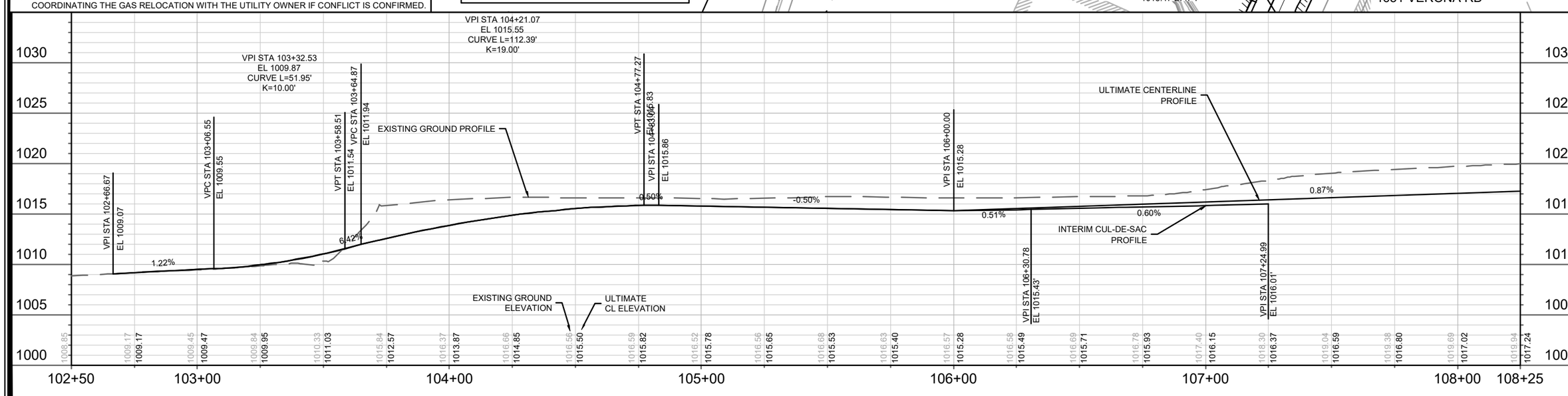

MARK	REVISION	DATE	BY
###	###	###	###
###	###	###	###
###	###	###	###
###	###	###	###

Designed By: IO | Date: 7/18/2023 11:01 AM | Scale: 1" = 40' | P-1

14774

MADISON, WI

CONTRACT NO: 9231

STREET PLAN & PROFILE - ATTICUS WAY

4649 VERONA ROAD

M:\DESIGN\Projects\14774\CAD\Streets\14774EN-PnP.dwg

14774

P-1

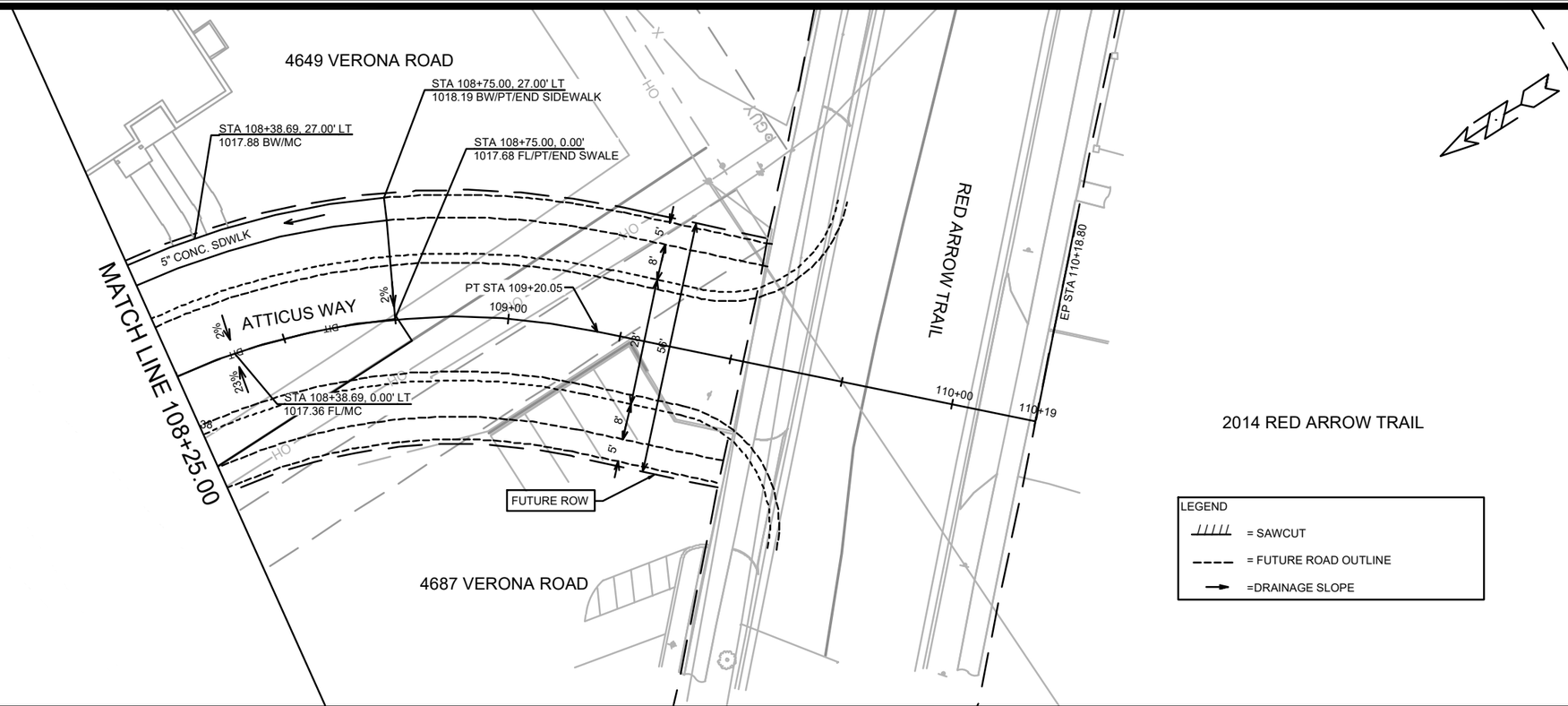

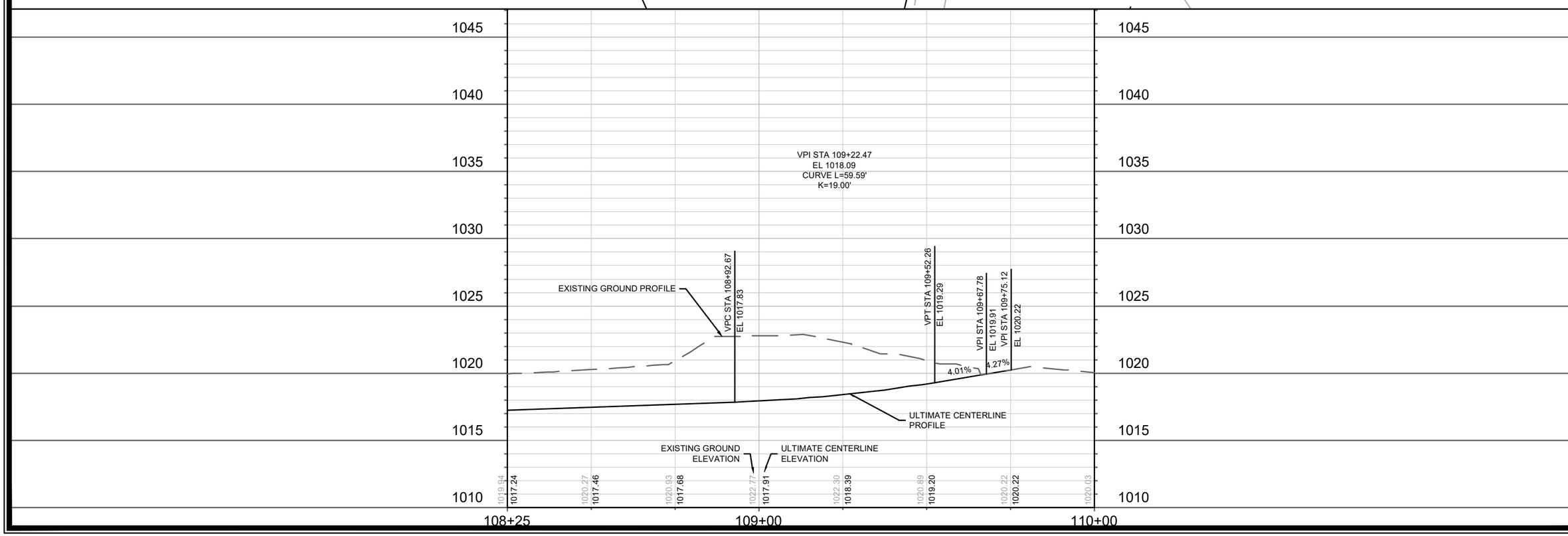

MARK	REVISION	DATE	BY
###	###	###	###
###	###	###	###
###	###	###	###
###	###	###	###

Designer By: IO | Date: 7/18/2023 9:58 AM | Scale: 1=30 | P-2

14774

MADISON, WI

CONTRACT NO: 9231

14774

STREET PLAN & PROFILE - ATTICUS WAY

4649 VERONA ROAD

M:\DESIGN\Projects\14774\CAD\Streets\14774EN-PnP.dwg

14774

P-2

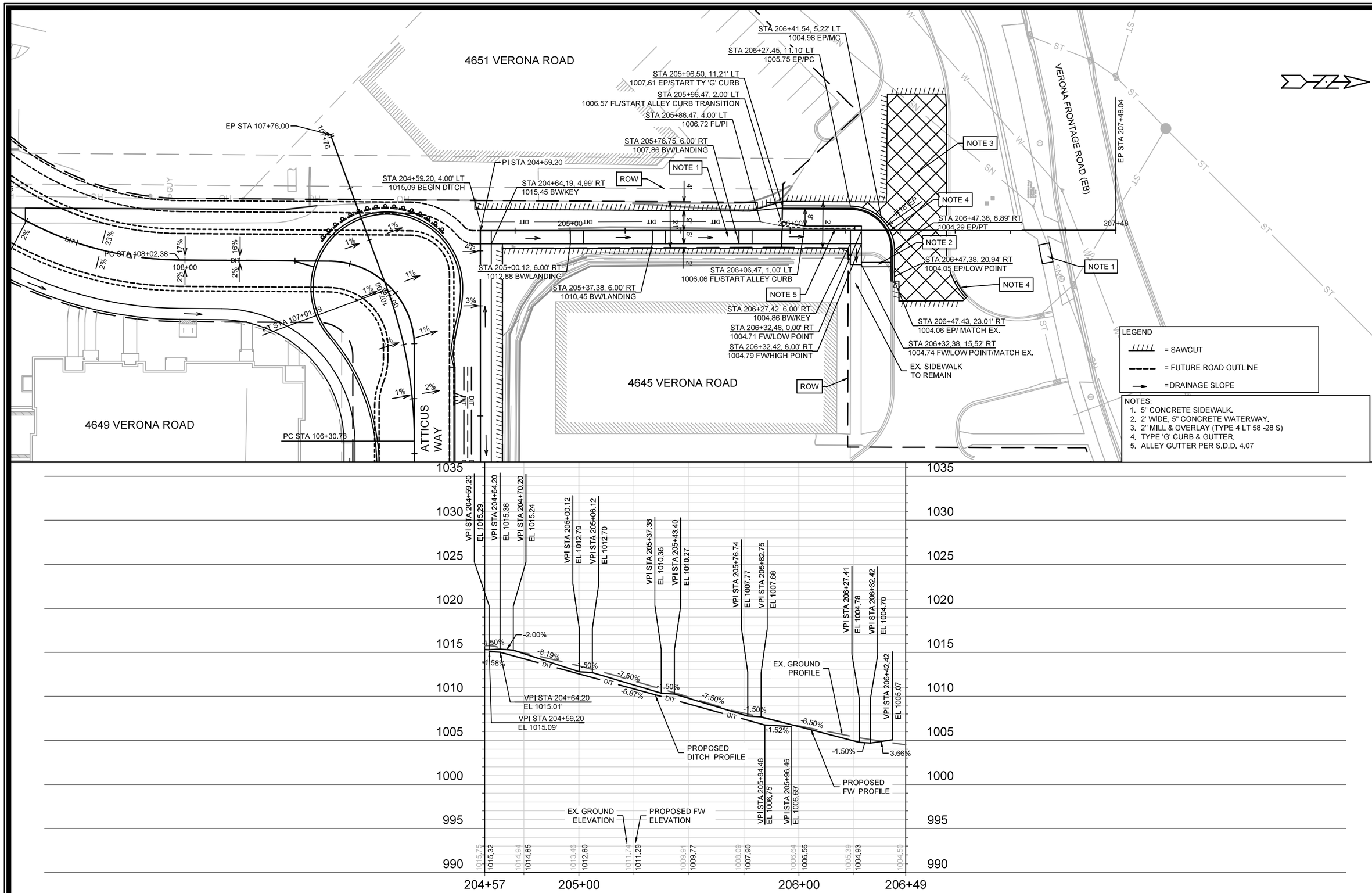

MARK	REVISION	DATE	BY

Designed By: IO | Date: 7/7/2023 7:57 AM | Scale: 1" = 40'

14774 | P-3

14774

MADISON, WI

CONTRACT NO: 9231

SIDEWALK PLAN & PROFILE - VERONA ROAD

4649 VERONA ROAD

M:\DESIGN\Projects\14774\CAD\Streets\14774EN-PnP.dwg

CITY OF MADISON WISCONSIN

14774

P-3

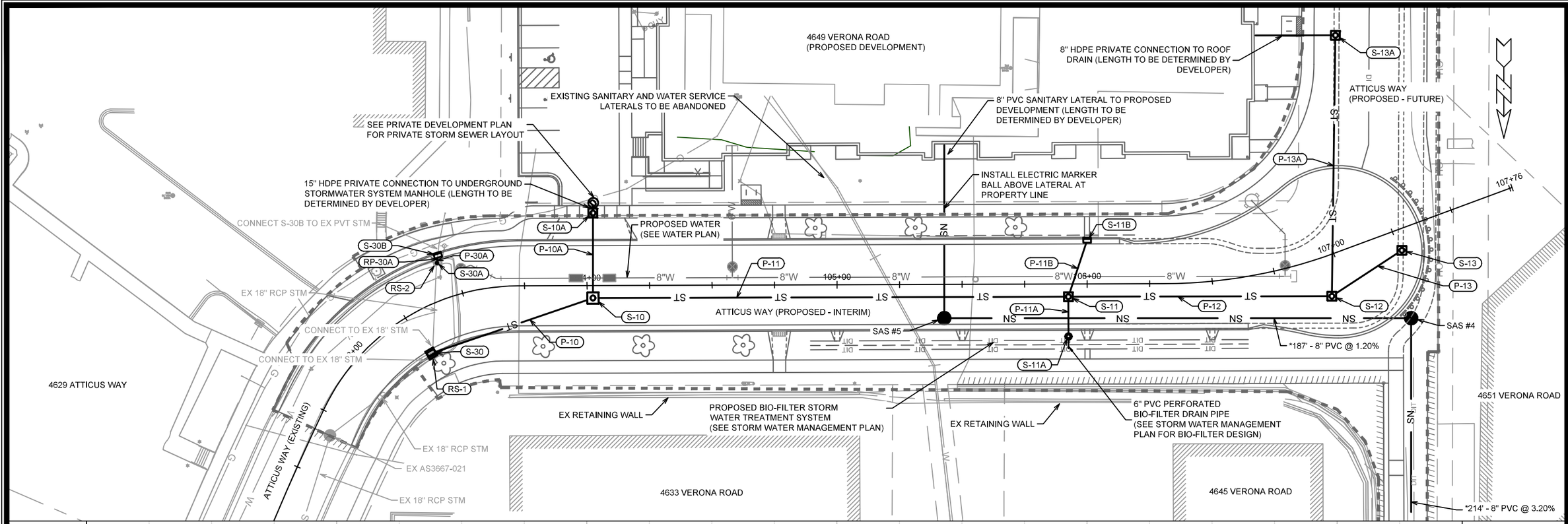

*SANITARY MAIN AND LATERAL SHALL CONFORM TO SPECIFICATIONS OF ASTM D3034 SDR-26

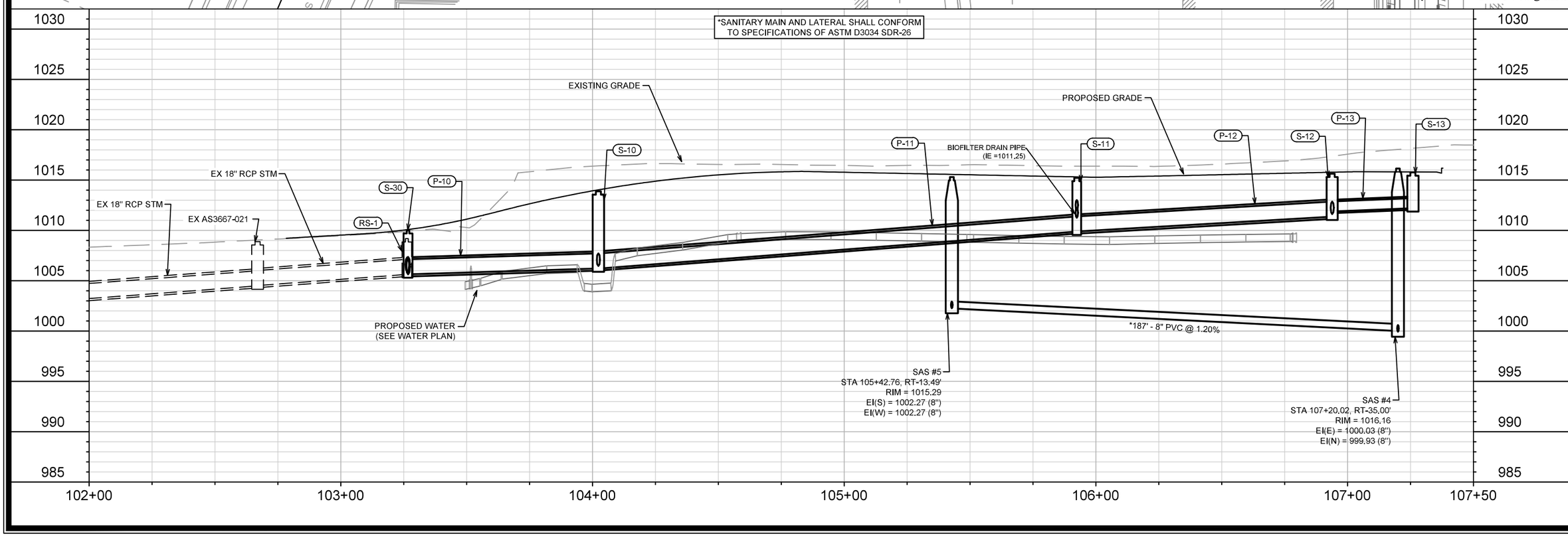

MARK	REVISION	DATE	BY

Designed By: EAC
Date: 5/31/2023 10:04 AM
Scale: 1" = 40'
14774
U-1

14774

MADISON, WI

9231

CONTRACT NO:

UTILITIES PLAN & PROFILE - ATTICUS WAY (INTERIM)

4649 VERONA ROAD

M:\DESIGN\Projects\14774\CAD\Sewers\14774SWR-PipeNetwork.dwg

14774

U-1

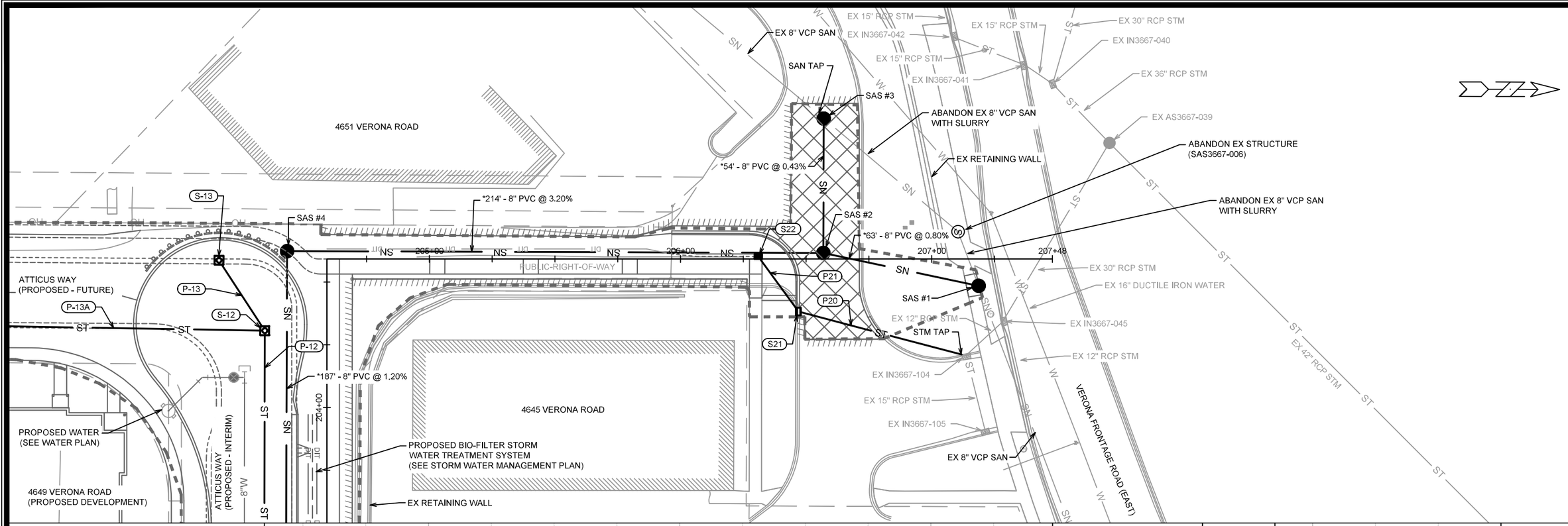

*SANITARY MAIN AND LATERAL SHALL CONFORM TO SPECIFICATIONS OF ASTM D3034 SDR-26

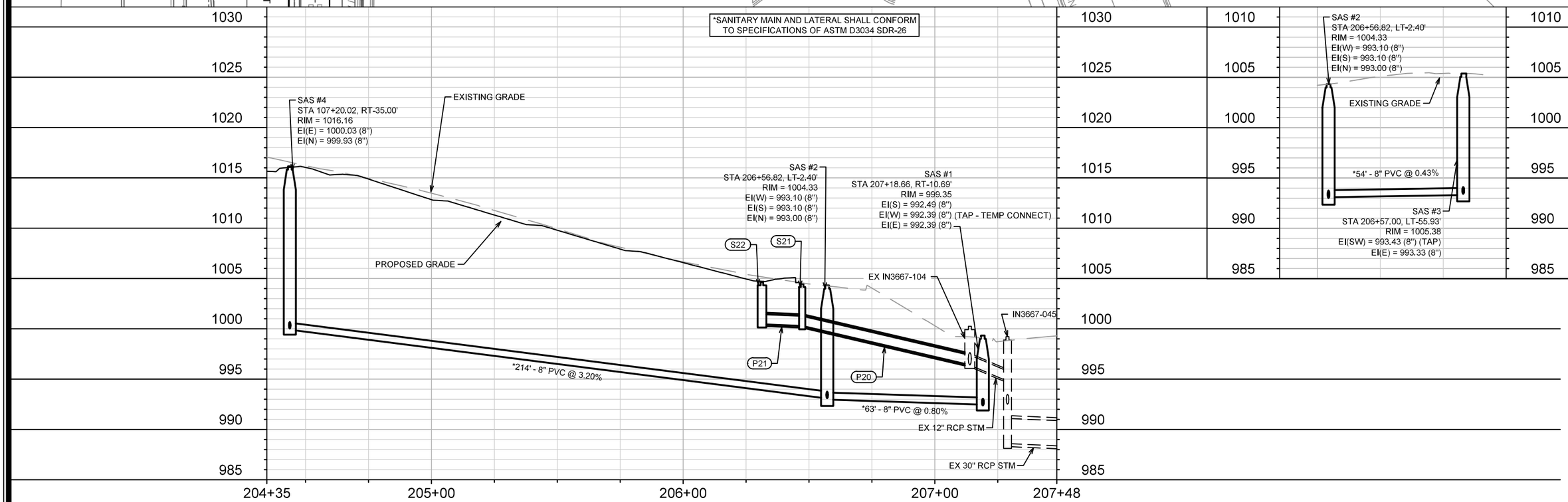

MARK	REVISION	DATE	BY

Designed By: EAC | Date: 5/31/2023 10:04 AM | Scale: 1" = 40'

14774 | U-2

14774

MADISON, WI

9231

CONTRACT NO:

UTILITIES PLAN & PROFILE - ATTICUS WAY (ALLEY)

4649 VERONA ROAD

M:\DESIGN\Projects\14774\CAD\Sewers\14774SWR-PipeNetwork.dwg

14774

U-2

4649 VERONA ROAD	SHEET NO.
PROJECT NO. 14774	U-3
SANITARY SEWER SCHEDULE	
CITY OF MADISON	

SANITARY SEWER SCHEDULE

PROPOSED SANITARY STRUCTURES

SAS NO.	STATION	LOCATION (OFFSET)	TOP OF CASTING	E.I.	DEPTH	NOTES
ATTICUS WAY						
SAS #1	207+18.66'	RT-10.69	999.35	992.39	6.96	-
SAS #2	206+56.82'	LT-2.40	1004.33	993.00	11.33	-
SAS #3	206+57.00'	LT-55.93	1005.38	993.33	12.05	-
SAS #4	107+20.02'	RT-35.00	1016.16	999.93	16.23	-
SAS #5	105+42.76'	RT-13.49	1015.29	1002.27	13.02	-

PROPOSED SANITARY PIPES

FROM (DNSTM)	TO (UPSTM)	DWNSTRM E.I.	UPSTRM E.I.	PLAN (PAY) LGTH (FT)	SLOPE (%)	PIPE SIZE	PVC TYPE	NOTES
ATTICUS WAY								
SAS #1	SAS #2	992.49	993.00	64	0.80%	8"	SDR-26	-
SAS #2	SAS #3	993.10	993.33	54	0.43%	8"	SDR-26	-
SAS #2	SAS #4	993.10	999.93	214	3.20%	8"	SDR-26	-
SAS #4	SAS #5	1000.03	1002.27	187	1.20%	8"	SDR-26	-

SANITARY STRUCTURE ABANDONMENTS

STRUCTURE ID NO.	STATION	LOCATION (OFFSET)	TOP OF CASTING	E.I.	DEPTH	NOTES
ATTICUS WAY						
3667-006	207+10.46'	LT-10.90	999.13	992.48	6.65	-

SANITARY PIPES ABANDONMENTS

REMOVE FROM	REMOVE TO	LGTH (FT)	PIPE SIZE	PIPE TYPE	NOTES
ATTICUS WAY					
SAS #1	3667-006	24	8"	VCP	SLURRY, 0.31 CY
3667-006	SAS #3	70	8"	VCP	SLURRY, 0.90 CY

STORM SEWER SCHEDULE

4649 VERONA ROAD	SHEET NO.
PROJECT NO. 14774	U-4
STORM SEWER SCHEDULE	
CITY OF MADISON	

PROPOSED STORM STRUCTURES

STRUC. NO.	STATION	LOCATION (OFFSET)	TYPE	TOP OF CASTING	E.I.	DEPTH	NOTES
ATTICUS WAY (RIGHT-OF-WAY)							
S-30	103+26.72'	RT-17.50	3X3 SAS	1010.04	1005.63	4.41	FP; W/R-3067-7004-V; [3]
S-30A	103+44.11'	LT-14.62	18" PIPE COLLAR	-	1006.32	-	[4]
S-30B	103+45.30'	LT-17.51	H-INLET	1010.81	1006.37	4.44	FP; W/R-3067-7004-V; [5]
S-10	104+02.33'	RT-4.97	4X4 SAS	1013.88	1006.21	7.67	W/R-1550-0054
S-10A	104+02.45'	LT-29.02	3X3 SAS	1014.34	1006.58	7.76	W/R-1550-0054
S-11	105+92.42'	RT-5.08	3X3 SAS	1015.21	1009.89	5.32	W/R-1550-0054
S-11A	105+92.42'	RT-20.97	2' CIRCULAR SAS	-	-	-	[1]
S-11B	106+00.01'	LT-17.50	H INLET	1015.97	1012.50	3.47	LP; W/R-3067-7004-VB
S-12	106+93.89'	RT-15.88	3X3 SAS	1015.63	1011.37	4.26	W/R-1550-0054
S-13	107+25.97'	RT-8.28	3X3 SAS	1015.76	1012.20	3.56	W/R-1550-0054; [2]
S-13A	107+30.92'	LT-81.60	3X3 SAS	1017.39	1013.53	3.86	W/R-1550-0054; [2]
S21	206+46.88'	RT-20.94	H INLET	1004.49	1000.29	4.20	W/R-3067-7004-V
S22	206+30.91'	LT-0.99	3X3 SAS	1004.64	1000.47	4.17	W/R 1878-B7G

PROPOSED STORM PIPES

PIPE NO.	FROM (DNSTM)	TO (UPSTM)	DISCH. E.I.	INLET E.I.	PLAN (PAY) LGTH (FT)	PIPE LGTH (FT)	SLOPE (%)	PIPE SIZE	TYPE	NOTES
ATTICUS WAY (RIGHT-OF-WAY)										
P-30A	S-30A	S-30B	1006.32	1006.37	4	4	1.25%	18"	RCP	
P-10	S-30	S-10	1005.63	1006.21	69	65	0.89%	18"	RCP	-
P-10A	S-10	S-10A	1006.46	1006.58	34	31	0.39%	15"	RCP	-
P-11	S-10	S-11	1006.21	1009.89	191	187	1.97%	18"	RCP	-
P-11A	S-11	S-11A	1011.25	1011.75	16	14	3.57%	12"	RCP	-
P-11B	S-11	S-11B	1012.02	1012.50	24	22	2.18%	12"	RCP	-
P-12	S-11	S-12	1009.89	1011.37	106	103	1.44%	18"	RCP	-
P-13	S-12	S-13	1011.87	1012.20	34	30	1.10%	12"	RCP	-
P-13A	S-12	S-13A	1011.62	1013.53	105	102	1.87%	15"	RCP	-
P20	IN3667-104	S21	996.40	1000.29	69	67	5.81%	12"	RCP	-
P21	S21	S22	1000.29	1000.47	28	24	0.75%	12"	RCP	-

STORM STRUCTURE REMOVALS & ABANDONMENTS

STRUC. NO.	ID NO.	STATION	LOCATION (OFFSET)	TYPE	DEPTH (FT)	NOTES
ATTICUS WAY (RIGHT-OF-WAY)						
RS-30A	IN3667-022	103+26.25'	RT-18.96	INLET	3.88	
RS-30B	IN3667-023	103+44.11'	LT-14.62	INLET	4.88	

STORM PIPE REMOVALS & ABANDONMENTS

PIPE REMOVAL NO.	REMOVE FROM	REMOVE TO	LGTH (FT)	PAID (Y/N)	REM LGTH PAID (FT)	ABN LGTH (FT)	SLURRY (CY)	PIPE SIZE	PIPE TYPE	NOTES
ATTICUS WAY (RIGHT-OF-WAY)										
RP-30A	S-30A	S-30B	4	Y	4	0	0.00	12"	RCP	

NOTE: PLAN LENGTH (PAY LENGTH) IS FROM CENTER OF STRUCTURE TO CENTER OF STRUCTURE. PIPE LENGTH IS ACTUAL LENGTH OF PIPE FROM STRUCTURE WALL TO STRUCTURE WALL. SLOPE CALCULATED USING PIPE LENGTH.

SPECIFIC NOTES

[1] STRUCTURE GRATE: 24" HAALA CONE (PART # CG24TM) - SEE 4649 VERONA ROAD PRIVATE DEVELOPMENT STORM WATER MANAGEMENT PLAN FOR STRUCTURE INFORMATION AND DETAILS.
[2] GRATE TO BE REPLACED WITH H-INLET CASTING DURING THE FUTURE ATTICUS WAY PROJECT.
[3] CONNECT EX 18" RCP TO CUTOUTS WITH COLLARS, EI(NE) = 1005.63, EI(S) = 1005.86.
[4] PLACE ELECRONIC MARKER BALL ABOVE COLLAR
[5] CONNECT EX 12" RCP PRIVATE STORM WITH COLLARS, APPROX EI(S) = 1006.50.

STANDARD NOTES:

- ABBREVIATIONS: AE = APRON ENDWALL; RCP = REINFORCED CONCRETE PIPE; HERCP = HORIZONTAL ELLIPTICAL REINFORCED CONCRETE PIPE; DNA = DOES NOT APPLY; SAS = SEWER ACCESS STRUCTURE; LP = LOW POINT INLET STRUCTURE; FP = FIELD POURED STRUCTURE; TR = TOP OF CONCRETE ROOF; NCM = NO CROWN MATCH FOR PIPES; UD = UNDERDRAIN
- TOP OF CASTING GRADE GIVEN IS THE TOP OF CURB FOR INLET STRUCTURES AND THE FLOWLINE OF THE CLOSED CASTING FOR SASs.
- TOP OF CONCRETE ROOF (TR) IS 1.25 BELOW TOP OF CASTING UNLESS OTHERWISE NOTED.
- ALL REINFORCED CONCRETE PIPES TO BE CLASS III UNLESS OTHERWISE NOTED.
- SURVEYOR TO CONFIRM THAT ALL INLET STATION / OFFSETS LINE UP WITH PROPOSED CURB AND GUTTER.
-ALL REBAR FOR FIELD POUR STRUCTURES SHALL BE EPOXY COATED. ANY EXPOSED STEEL SHALL BE TOUCHED UP OR RECOATED PRIOR TO USE.
-ALL FIELD POURED SAS STORM STRUCTURES SHALL BE CONSTRUCTED IN ACCORDANCE WITH STANDARD DETAIL DRAWING 5.7.3.
-ALL PRECAST SAS STORM STRUCTURES SHALL BE CONSTRUCTED IN ACCORDANCE WITH STANDARD DETAIL DRAWING 5.7.5.
- ALL STRUCTURES CALLED OUT AS FIELD POURED SHALL BE FIELD POURED. ALL OTHER STRUCTURES (NOT INDICATED AS FIELD POURED) SHALL BE SUBMITTED TO CITY ENGINEERING FOR APPROVAL IF PRECAST STRUCTURES ARE PREFERRED. CONTACT ERIC CEFALU OF CITY ENGINEERING AT (608) 243-5894 FOR PRECAST APPROVALS, FAX SHOP DRAWINGS TO (608) 264-9275, OR EMAIL SHOP DRAWINGS TO ECEFALU@CITYOFMADISON.COM.

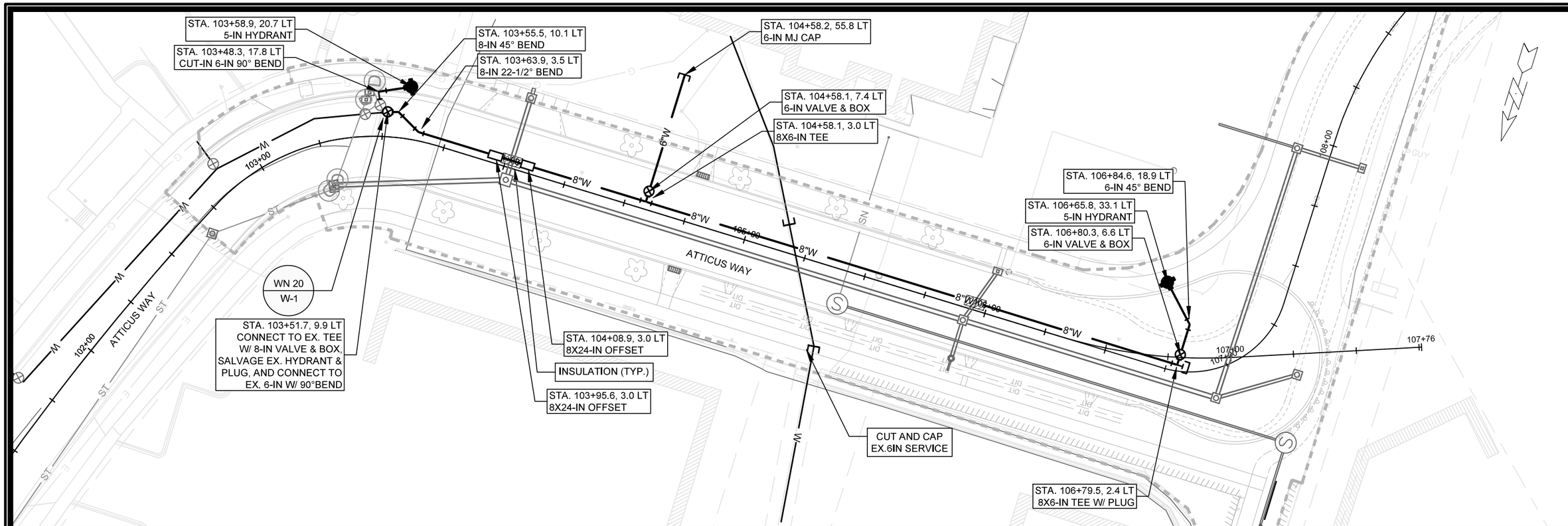

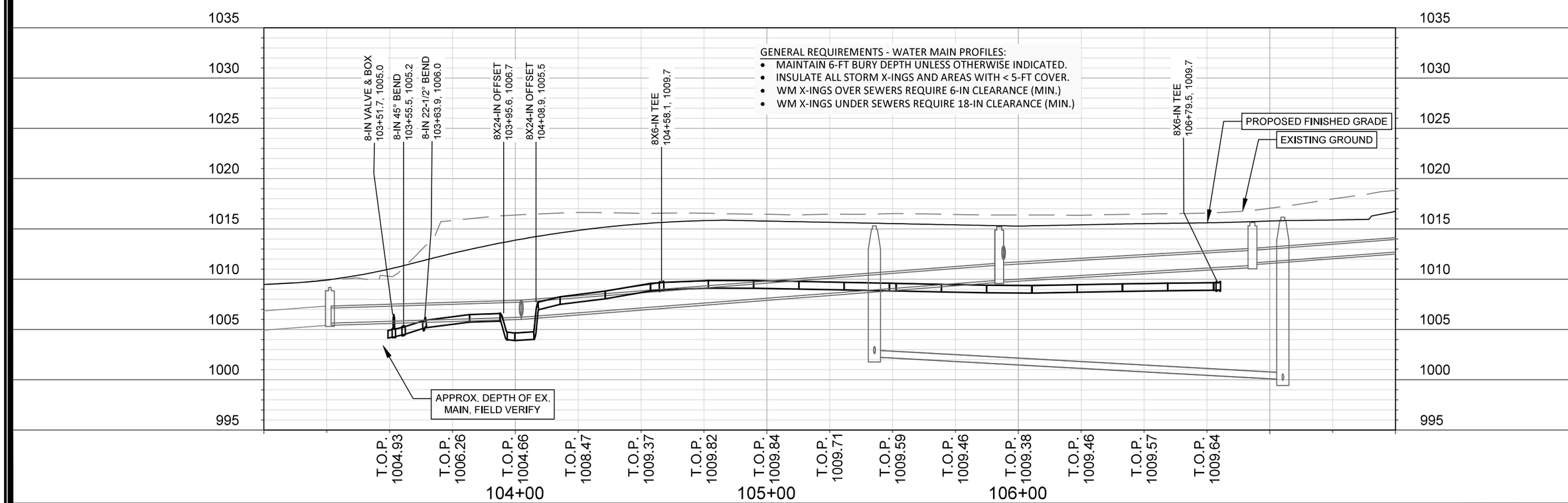

SCALE: 1" = 40'
DESIGNED BY: TDP
MADISON WATER UTILITY
119 E OLIN AVE, MADISON, WI 53713
PRINTING DATE: 7/7/23

CONTRACT NO: 9231

4649 VERONA ROAD CSM

ATTICUS WAY WATER PLAN & PROFILE

CITY OF MADISON, WISCONSIN

14774

W-1

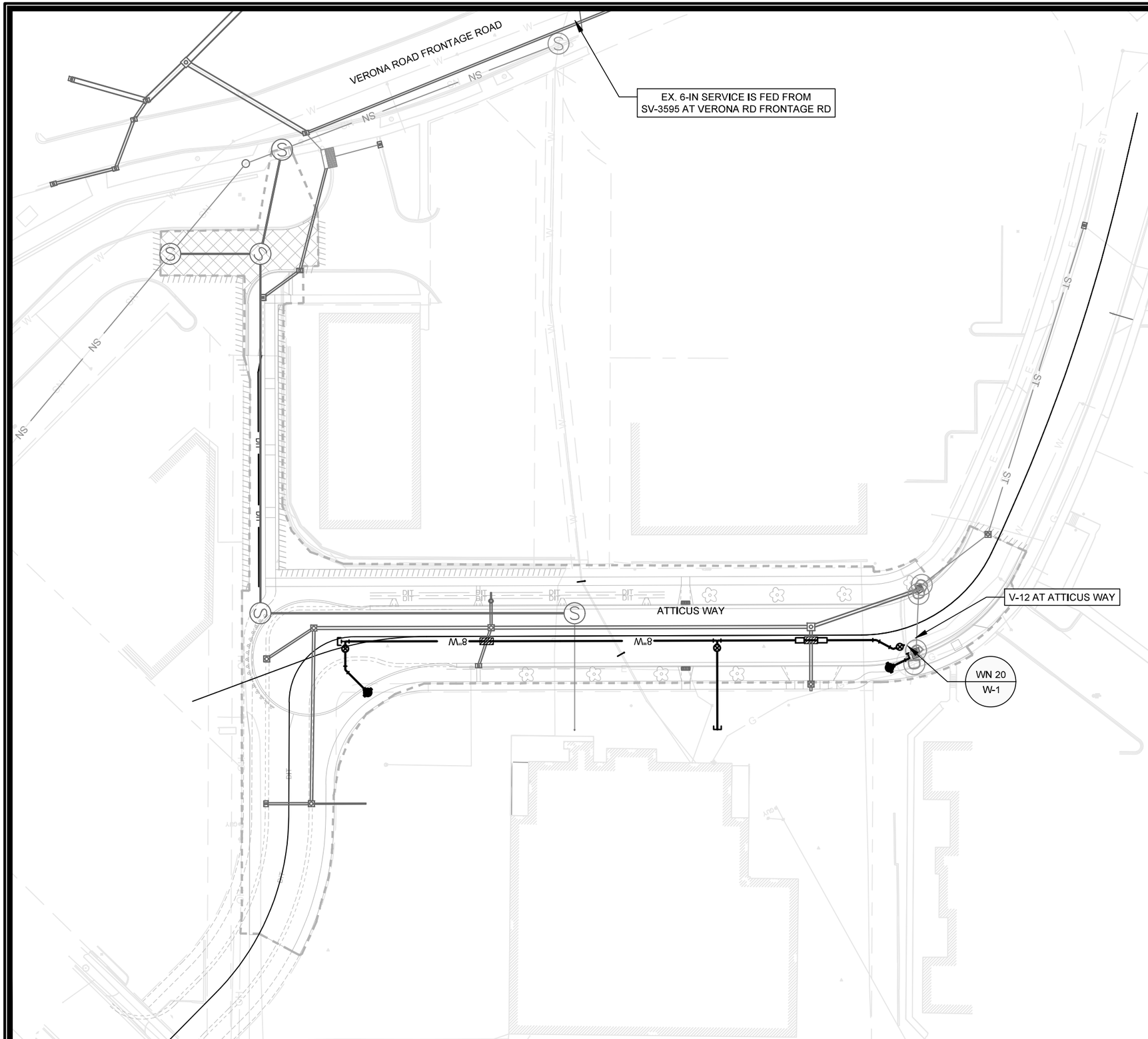

1" = 60'

Madison Water Utility

WN20 W-1 CONNECT TO EX. TEE AT ATTICUS WAY
ISOLATION VALVE: V-12 AT ATTICUS WAY
NOTIFY: NONE REQUIRED

DISCLAIMER NOTE:
THE WATER IMPACT PLAN IS PROVIDED FOR REFERENCE PURPOSES TO AID PLANNING CONNECTION POINT ISOLATION AND PREPARING NOTIFICATION LISTS DURING PLANNED OUTAGES. REQUEST ANY ALTERNATIVE CONNECTION METHODS IN WRITING, PER SPECS.

SCALE: 1" = 60'
DESIGNED BY: TDP
MADISON WATER UTILITY
119 E OLIN AVE, MADISON, WI 53713
PRINTING DATE: 1/05/23

CONTRACT NO: 9231

4649 VERONA ROAD
WATER IMPACT PLAN ATTICUS WAY
CITY OF MADISON, WISCONSIN

14774
W-2

M:\DESIGN\PROJECTS\14774\CAD\WATER\14774 WU-IMPACTPLAN.DWG

Madison Water Utility

CONSTRUCTION NOTES:

1. CONSTRUCT NEW WATER MAIN 6.0' BELOW FINISHED GRADE, UNLESS OTHERWISE NOTED. INSULATE MAIN WITH POLYSTYRENE BOARD AT UTILITY CROSSINGS OR OTHER AREAS IDENTIFIED BY ENGINEER AS HAVING INADEQUATE COVER.
2. VERIFY SIZE OF EXISTING WATER SERVICES AND RECONNECT SERVICES AS INDICATED.
3. MINIMIZE DISRUPTION OF SERVICE TO CUSTOMERS. NOTIFY PER CONTRACT REQUIREMENTS OF ANY PLANNED WATER OUTAGE.

WN1	REPLACE THE EXISTING LEAD SERVICE WITH A NEW COPPER SERVICE.
WN-2	EXTEND AND RECONNECT THE EXISTING COPPER SERVICE TO THE NEW WATER MAIN.
WN-3	EXISTING SERVICE TO BE ABANDONED WHEN THE WATER MAIN IS CUT OFF.
WN-4	DISCONNECT FROM THE OLD WATER MAIN AND RECONNECT THE EXISTING COPPER WATER SERVICE LATERAL TO THE NEW WATER MAIN.
WN-5	RELOCATE THE EXISTING FIRE HYDRANT.
WN-6	ABANDON WATER VALVE ACCESS STRUCTURE.
WN-7	FURNISH AND INSTALL THE NEW TOP SECTION FOR THE WATER ACCESS STRUCTURE.
WN-8	ABANDON THE VALVE BOX.
WN-9	FURNISH THE DITCH, COMPACTION, AND ALL MATERIALS AND LABOR FOR THE INSTALLATION OF NEW SERVICE LATERAL.
WN-10	REMOVE AND SALVAGE EXISTING HYDRANT
WN-11	REPLACE THE EXISTING COPPER SERVICE WITH A COPPER SERVICE
WN-20+	SEE WATER IMPACT PLAN FOR CONNECTION POINT ISOLATION AND WATER SHUT-OFF NOTIFICATION INFORMATION.

WATER UTILITY ULO SCHEDULE

ULO	UTILITY	STATION	OFFSET	SHEET

*ESTIMATE OF MATERIALS SUPPLIED BY CONTRACTOR:

PAY ITEM ID	DESCRIPTION	QUANTITY	UNIT
70002	FURNISH AND INSTALL 6-INCH PIPE & FITTINGS	120	LNFT
70003	FURNISH AND INSTALL 8-INCH PIPE & FITTINGS	360	LNFT
70031	FURNISH AND INSTALL 6-INCH WATER VALVE	2	EACH
70032	FURNISH AND INSTALL 8-INCH WATER VALVE	1	EACH
70040	FURNISH AND INSTALL AND SALVAGE HYDRANT	2	EACH
70101	FURNISH AND INSTALL STYROFOAM	2	EACH
71001	6-IN MJ CAP	3	EACH
71014	8-IN MJ PLUG	1	EACH
71110	6-IN 90° BEND	1	EACH
71122	6-IN 45° BEND	1	EACH
71123	8-IN 45° BEND	1	EACH
71135	8-IN 22-1/2° BEND	1	EACH
71210	8X6-IN TEE	2	EACH
71342	8X24-IN OFFSET	2	EACH
*ESTIMATE OF MATERIALS SUPPLIED BY WATER UTILITY:			
*ESTIMATE OF MATERIALS SALVAGED:			
	HYDRANT	1	EACH
	8-IN MJ PLUG	1	EACH

** ESTIMATE OF MATERIALS IS FOR INFORMATION ONLY. ENGINEER DOES NOT GUARANTEE ACCURACY OF MATERIAL TAKE-OFF.*

TO OBTAIN LOCATION OF PARTICIPANTS' UNDERGROUND FACILITIES BEFORE YOU DIG IN WISCONSIN

CALL DIGGERS HOTLINE
TOLL FREE
811 OR 1-800-242-8511
FAX-A-LOCATE 1-800-338-3860
TDD (FOR HEARING IMPAIRED) 1-800-542-2289

WIS. STATUTE 182.0175 (1974) REQUIRES MIN. OF 3 WORK DAYS NOTICE BEFORE YOU EXCAVATE.

MEMBER ONE CALL SYSTEMS INTERNATIONAL

DISCLAIMER NOTE: UTILITY LOCATIONS SHOWN ARE APPROXIMATE ONLY. IT SHALL BE THE CONTRACTOR'S RESPONSIBILITY TO DETERMINE THE EXACT HORIZONTAL AND VERTICAL LOCATION OF ALL EXISTING UNDERGROUND AND OVERHEAD UTILITIES PRIOR TO COMMENCING WORK.

PART VII - WATER MAINS AND SERVICE LATERALS

DETAIL DRAWING NO. **7.04**

REVISED: 11/2022

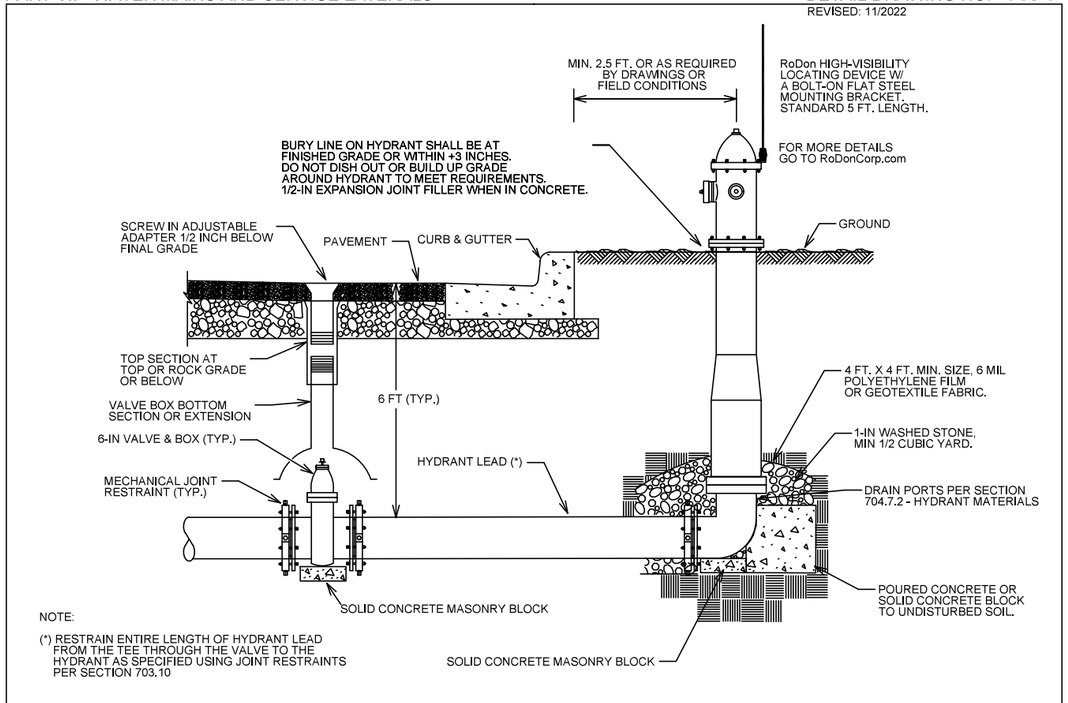

NOTE:

(*) RESTRAIN ENTIRE LENGTH OF HYDRANT LEAD FROM THE TEE THROUGH THE VALVE TO THE HYDRANT AS SPECIFIED USING JOINT RESTRAINTS PER SECTION 703.10

CITY OF MADISON WATER UTILITY	NOT TO SCALE	TYPICAL HYDRANT INSTALLATION

SCALE: N/A
DESIGNED BY: TDP
MADISON WATER UTILITY
119 E OLIN AVE, MADISON, WI 53713
PRINTING DATE: 7/7/23

CONTRACT NO: 9231

4649 VERONA ROAD CSM
WATER ESTIMATE OF MATERIALS
CITY OF MADISON, WISCONSIN

14774
W-3

M:\DESIGN\PROJECTS\14774\CAD\WATER\14774 WU-MATERIALS.DWG

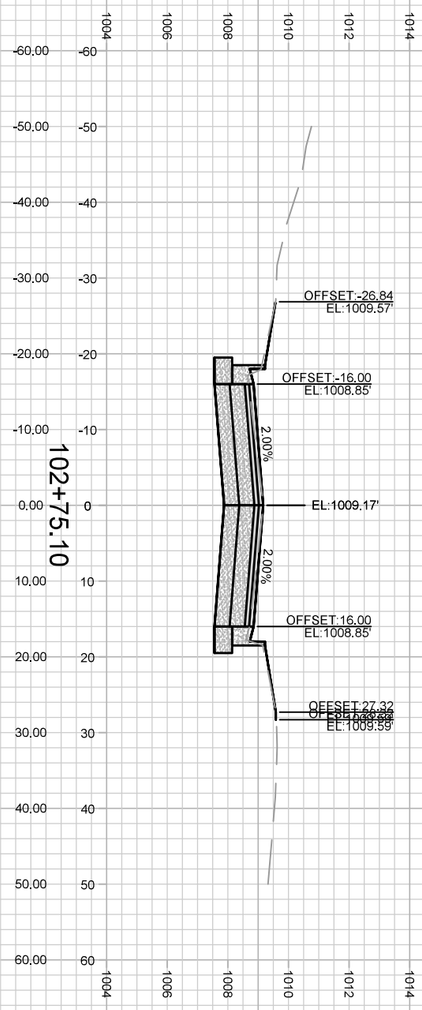

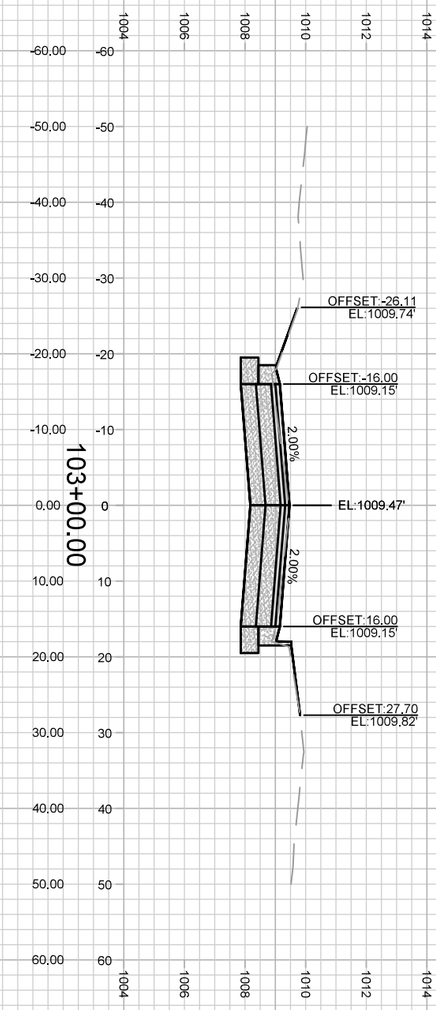

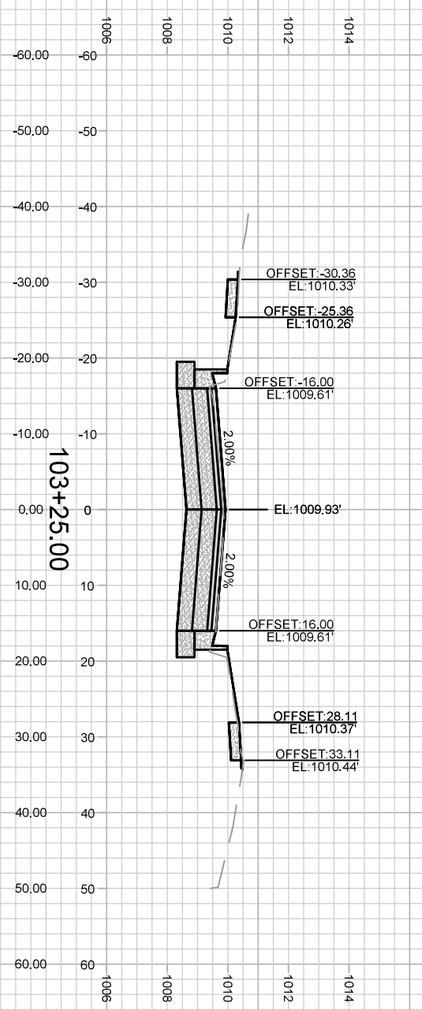

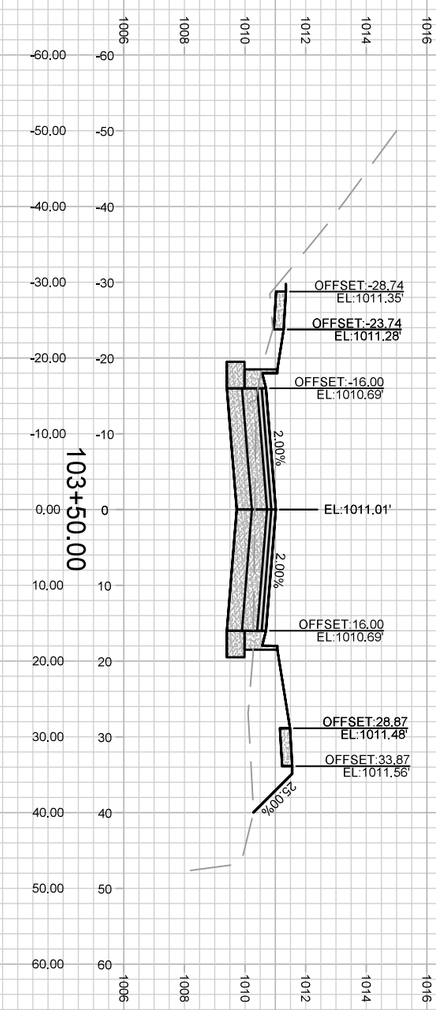

X-1

14774

CROSS SECTIONS - ATTICUS WAY 14774

4649 VERONA ROAD MADISON, WI

M:\DESIGN\Projects\14774\CAD\Streets\14774EN-AliProf&Corridor_Setup.dwg

CONTRACT NO: 9231

MARK	REVISION	DATE	BY
###	###	###	###
###	###	###	###
###	###	###	###
###	###	###	###

Designed By: IO | Date: 6/20/2023 2:54 PM | Scale: 1" = 20'

14774 | X-1

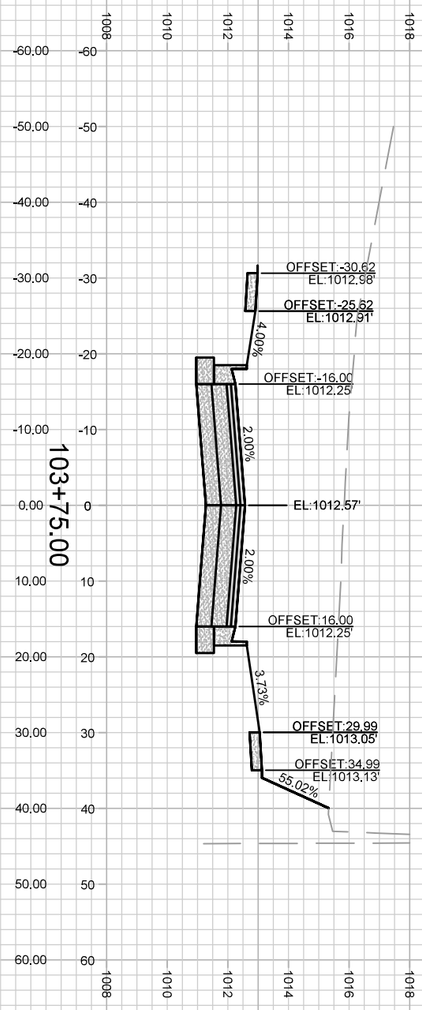

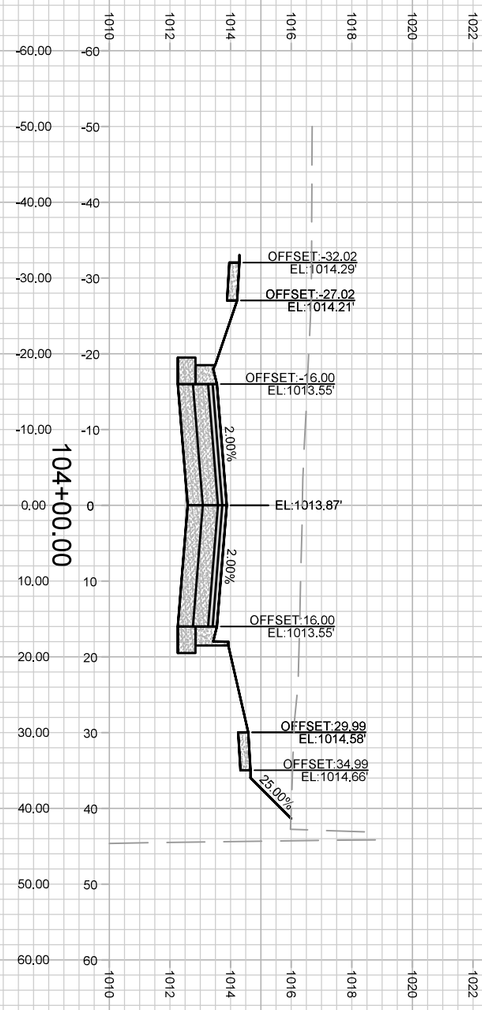

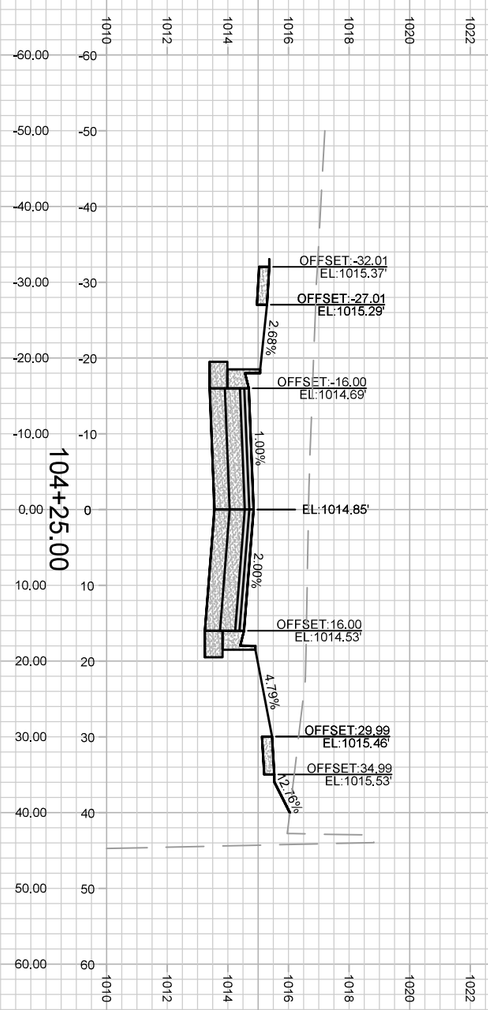

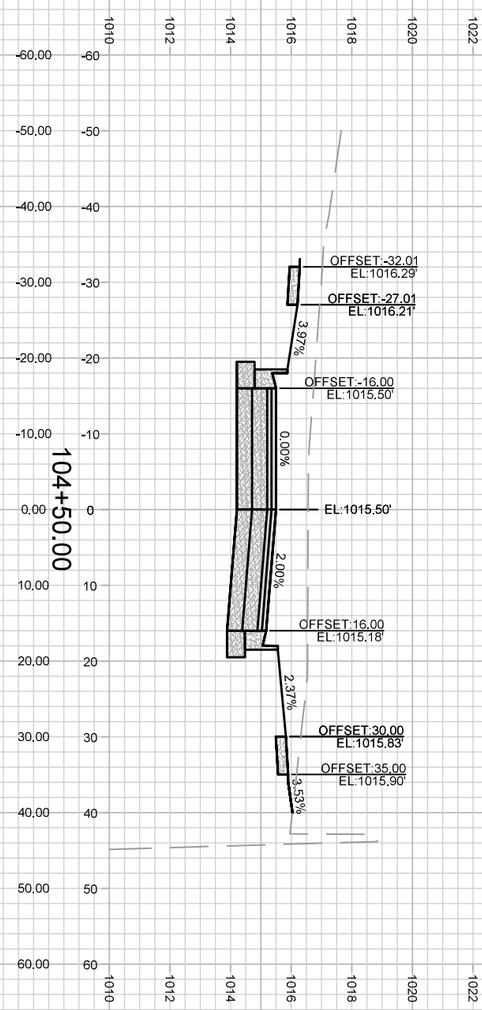

X-2

14774

CROSS SECTIONS - ATTICUS WAY 14774

4649 VERONA ROAD MADISON, WI

M:\DESIGN\Projects\14774\CAD\Streets\14774EN-AliProf&Corridor_Setup.dwg CONTRACT NO: 9231

MARK	REVISION	DATE	BY
###	###	###	###
###	###	###	###
###	###	###	###
###	###	###	###

Designed By: IO | Date: 6/20/2023 2:47 PM | Scale: 1" = 20'

14774 X-2

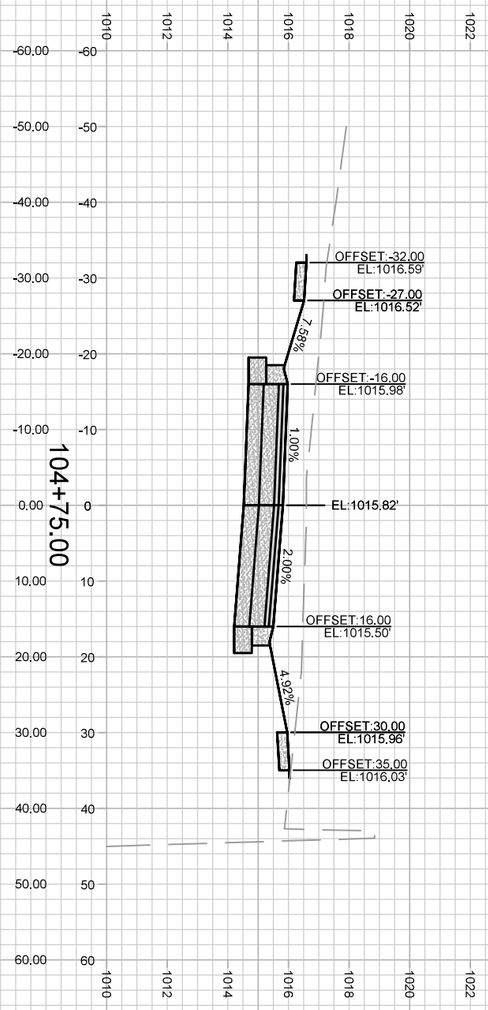

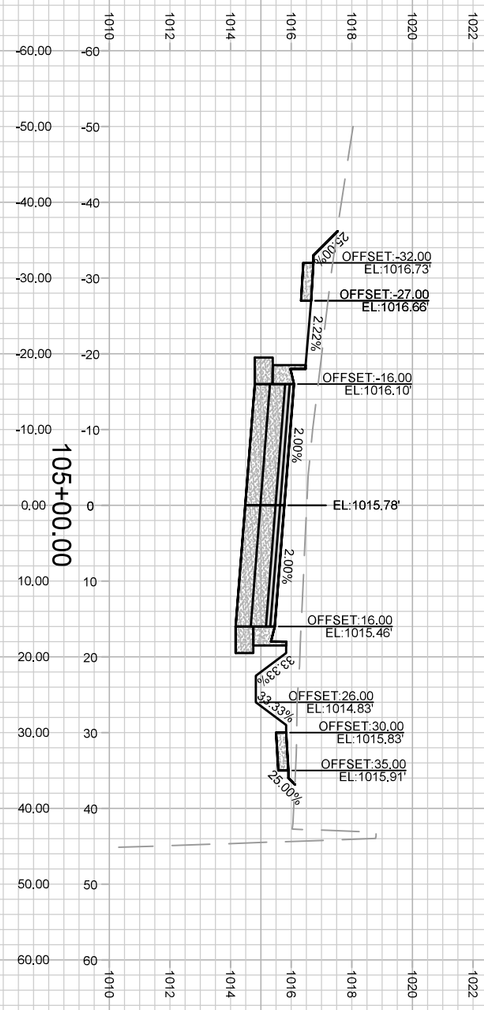

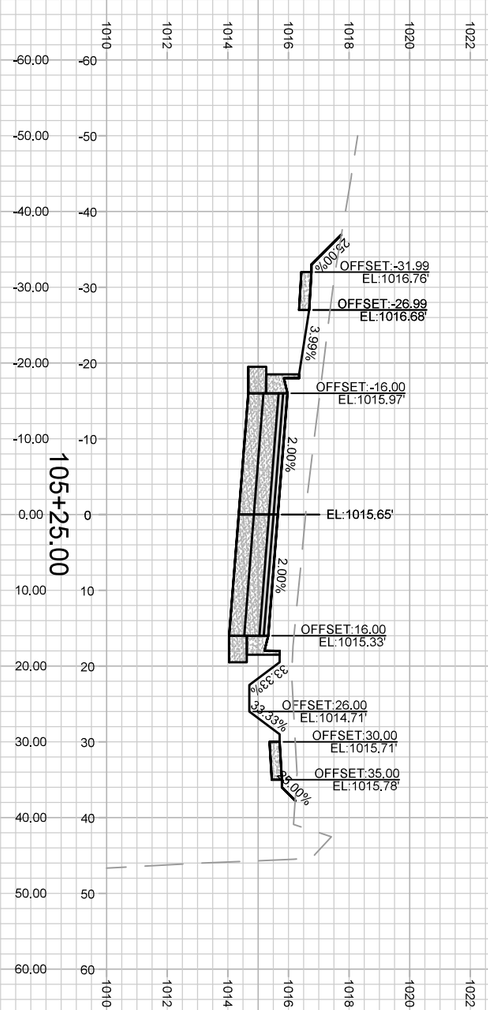

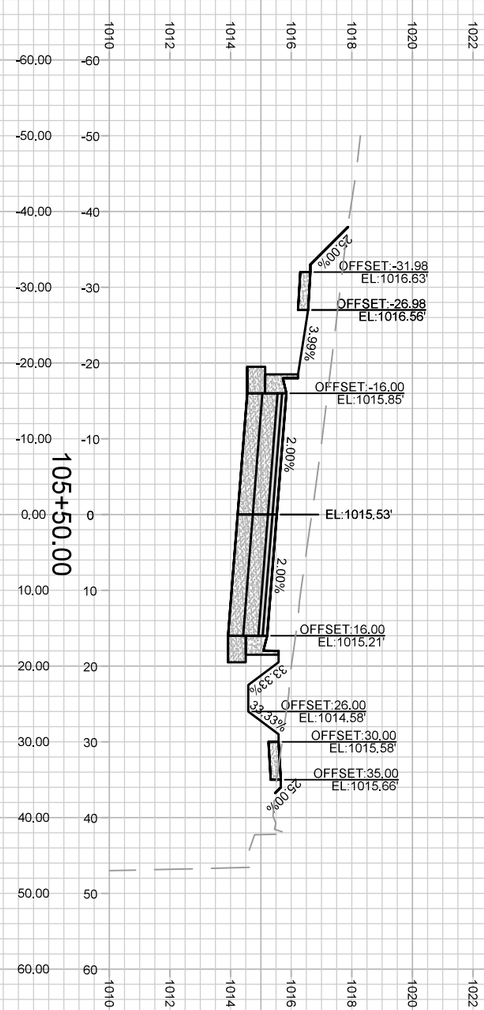

X-3

14774

CROSS SECTIONS - ATTICUS WAY 14774

4649 VERONA ROAD MADISON, WI

M:\DESIGN\Projects\14774\CAD\Streets\14774EN-AliProf&Corridor_Setup.dwg CONTRACT NO: 9231

MARK	REVISION	DATE	BY
###	###	###	###
###	###	###	###
###	###	###	###
###	###	###	###

Designed By: IO | Date: 6/20/2023 2:49 PM | Scale: 1" = 20'

14774 X-3

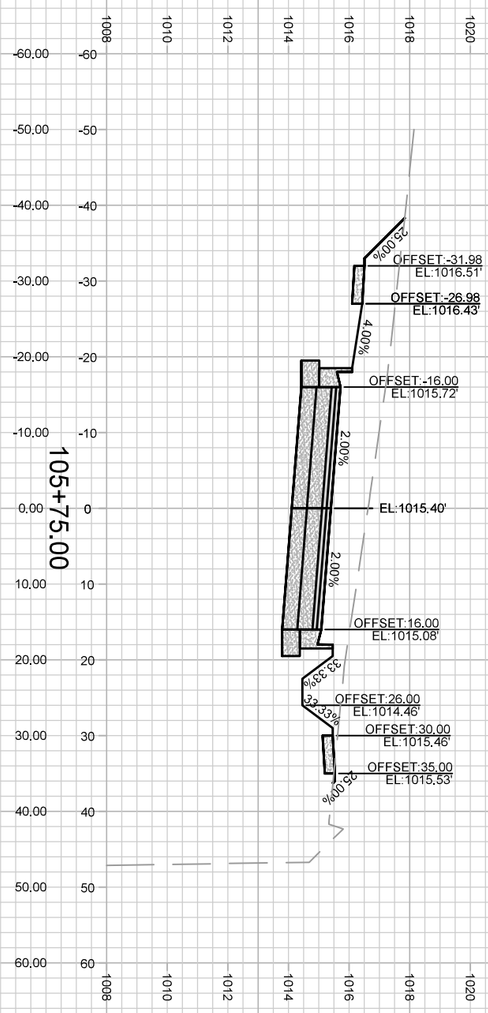

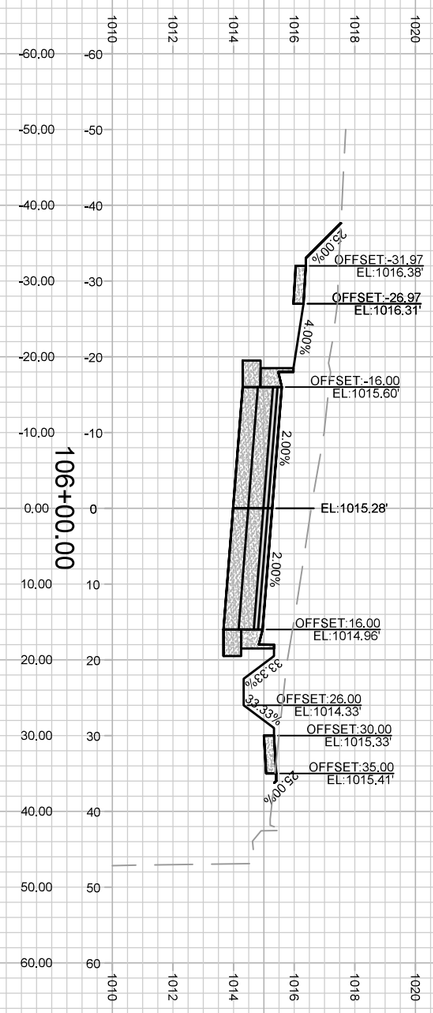

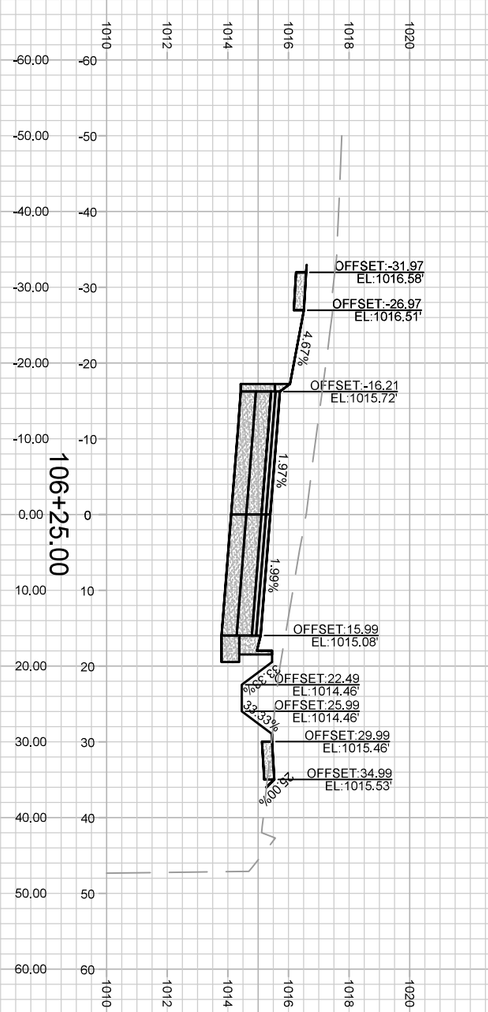

X-4

14774

CROSS SECTIONS - ATTICUS WAY 14774

4649 VERONA ROAD MADISON, WI

M:\DESIGN\Projects\14774\CAD\Streets\14774EN-AliProf&Corridor_Setup.dwg CONTRACT NO: 9231

MARK	REVISION	DATE	BY
###	###	###	###
###	###	###	###
###	###	###	###
###	###	###	###

Designed By: IO | Date: 6/20/2023 2:51 PM | Scale: 1" = 20'

14774 X-4

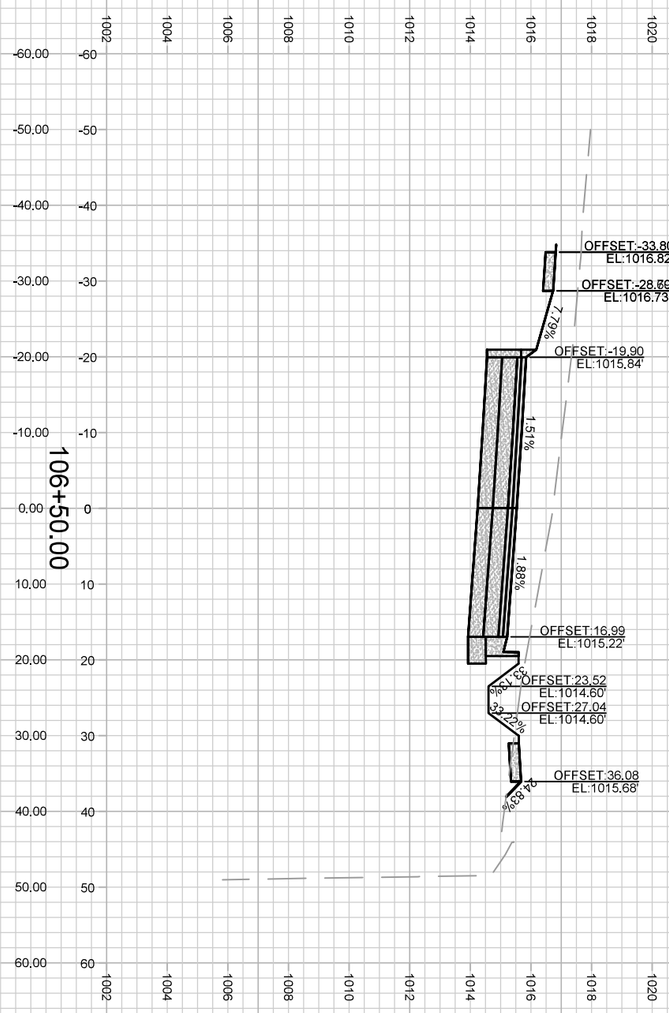

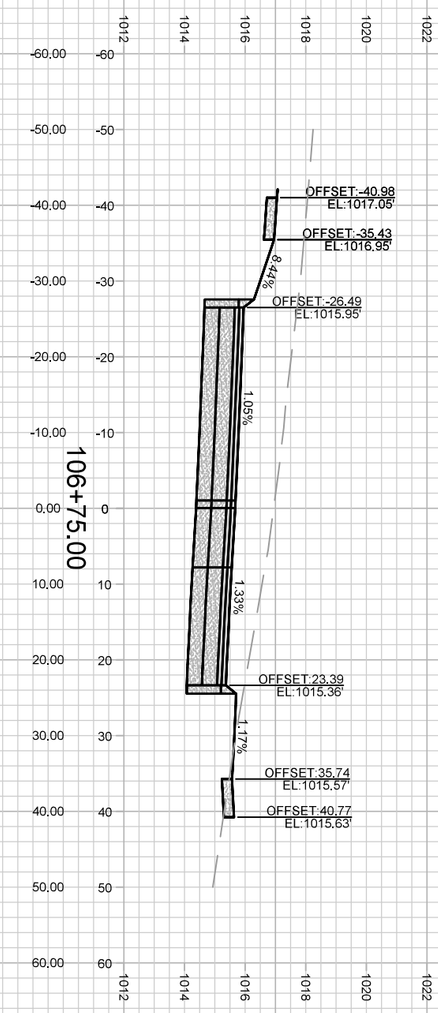

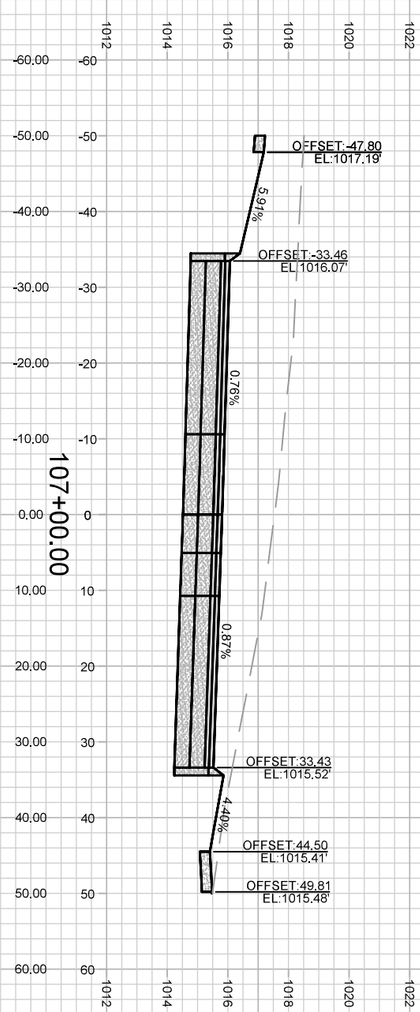

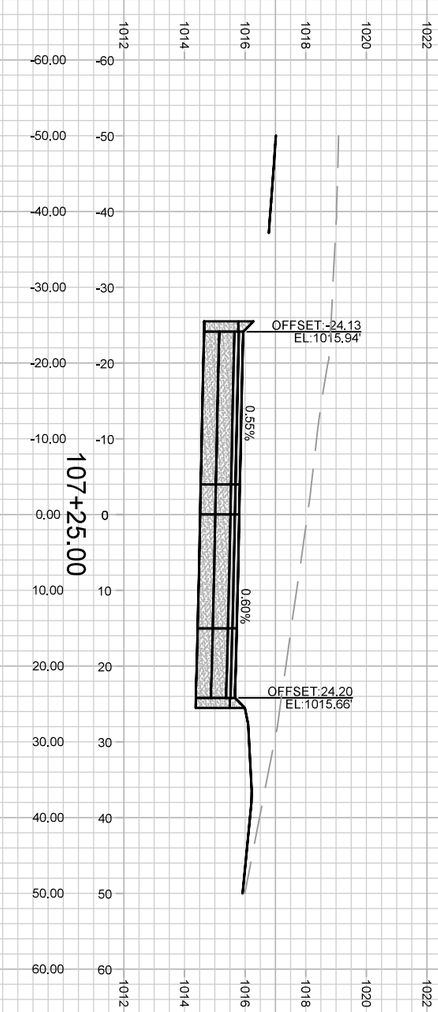

X-5

14774

CROSS SECTIONS - ATTICUS WAY 14774

4649 VERONA ROAD MADISON, WI

M:\DESIGN\Projects\14774\CAD\Streets\14774EN-AliProf&Corridor_Setup.dwg CONTRACT NO: #####

MARK	REVISION	DATE	BY
###	###	###	###
###	###	###	###
###	###	###	###
###	###	###	###

Designed By: ### Date: 6/20/2023 2:53 PM Scale: 1" = 20'

14774 X-5

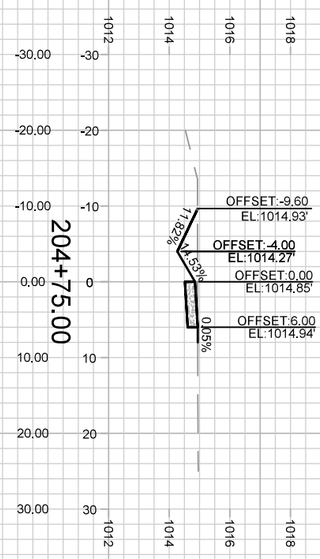

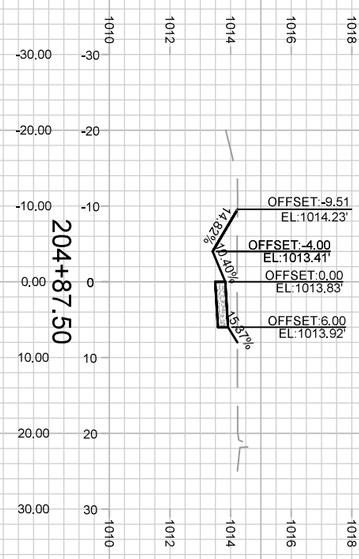

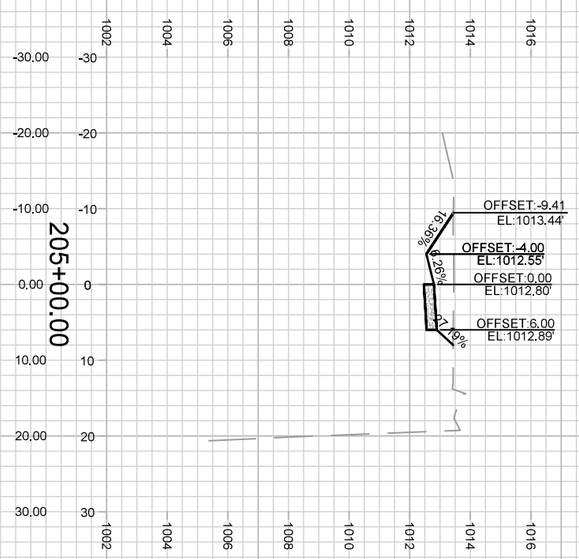

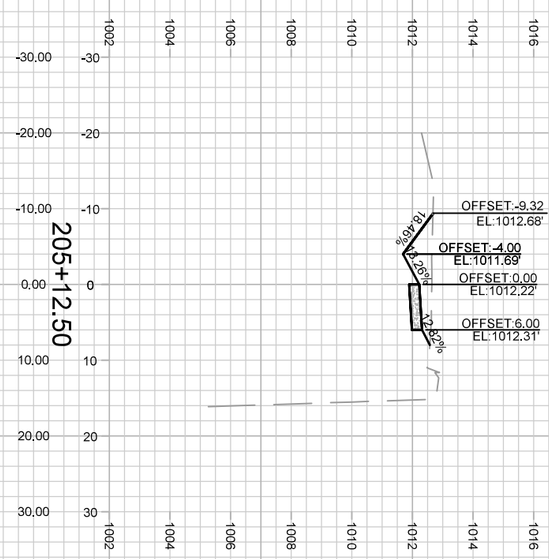

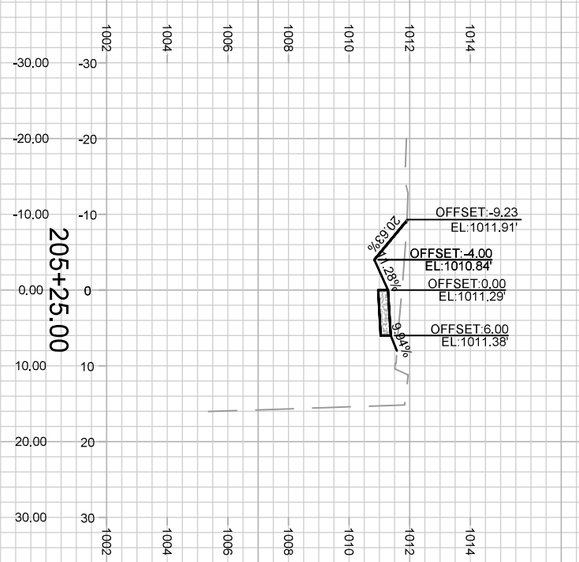

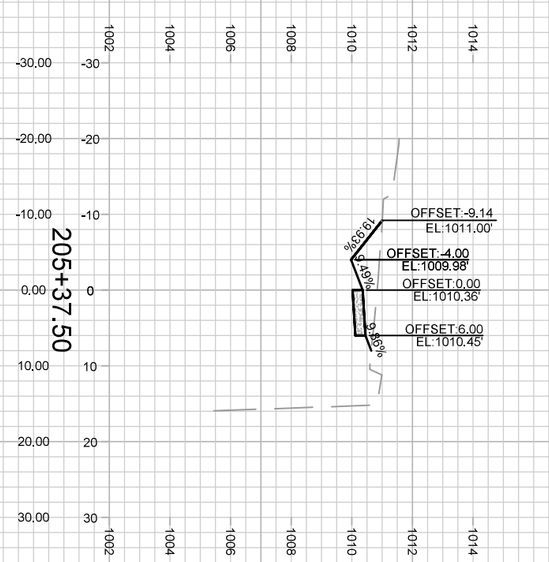

X-6

14774

CROSS SECTIONS - VERONA ROAD SIDEWALK 14774

4649 VERONA ROAD MADISON, WI

M:\DESIGN\Projects\14774\CAD\Streets\14774EN-AliProf&Corridor_Setup.dwg CONTRACT NO: 9231

MARK	REVISION	DATE	BY
###	###	###	###
###	###	###	###
###	###	###	###
###	###	###	###

Designed By: IO | Date: 7/6/2023 2:31 PM | Scale: 1" = 20'

14774 | X-6

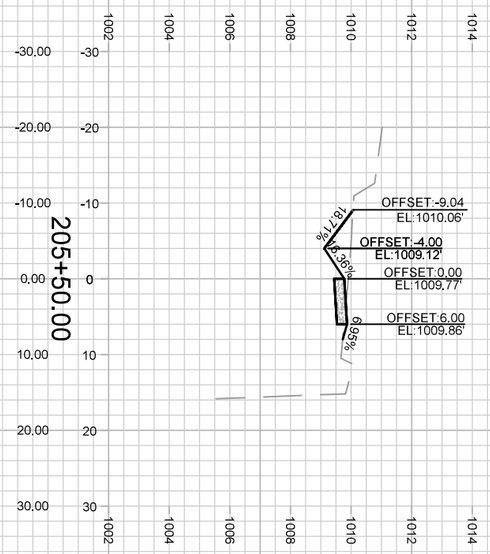

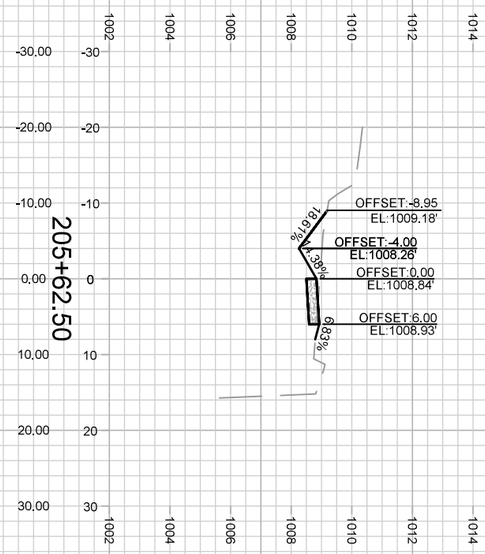

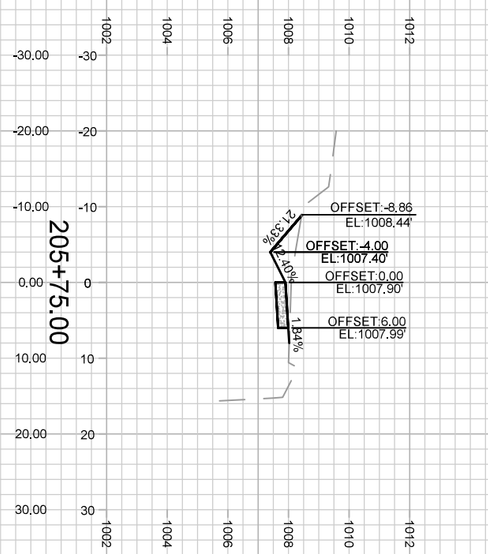

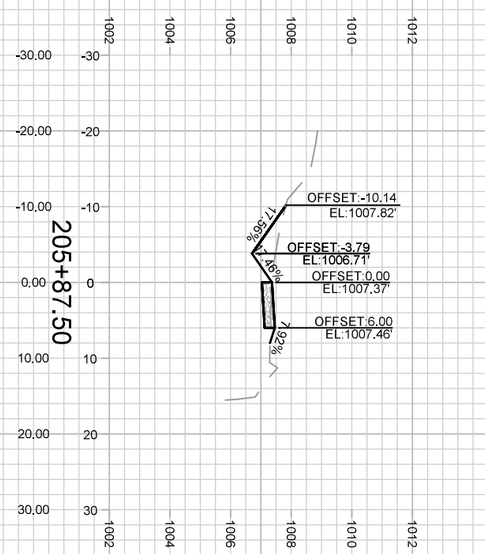

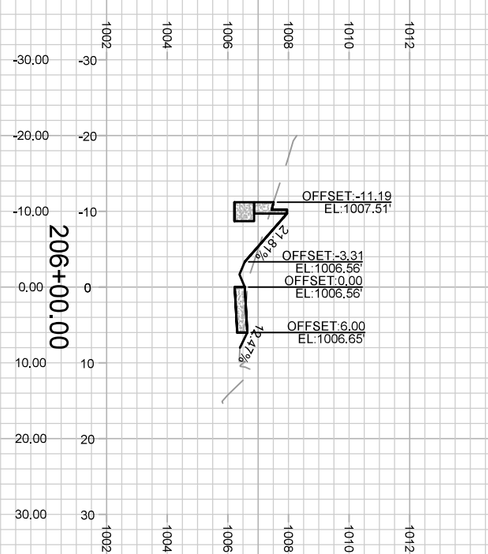

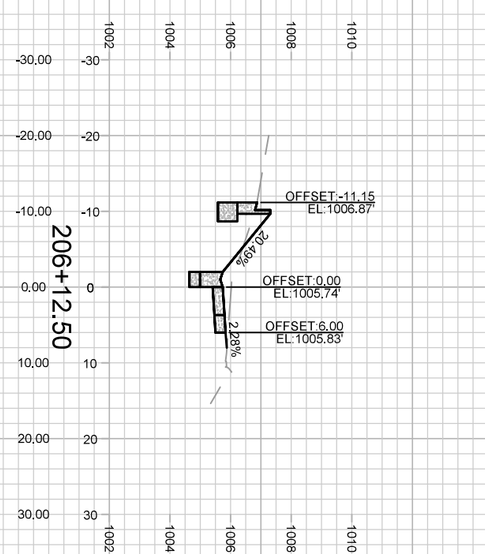

X-7

14774

CROSS SECTIONS - VERONA ROAD SIDEWALK 14774

4649 VERONA ROAD MADISON, WI

M:\DESIGN\Projects\14774\CAD\Streets\14774EN-AliProf&Corridor_Setup.dwg CONTRACT NO: 9231

MARK	REVISION	DATE	BY
###	###	###	###
###	###	###	###
###	###	###	###
###	###	###	###

Designed By: IO | Date: 7/6/2023 2:31 PM | Scale: 1" = 20'

14774 | X-7

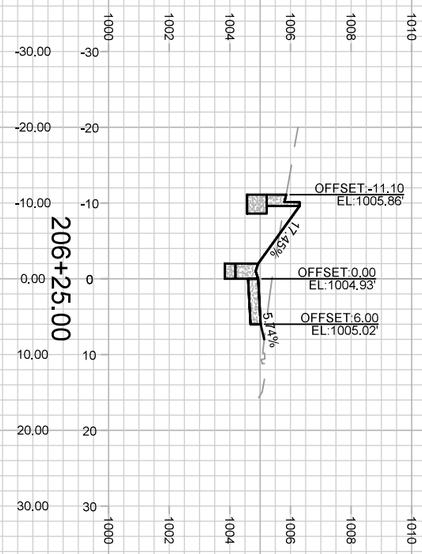

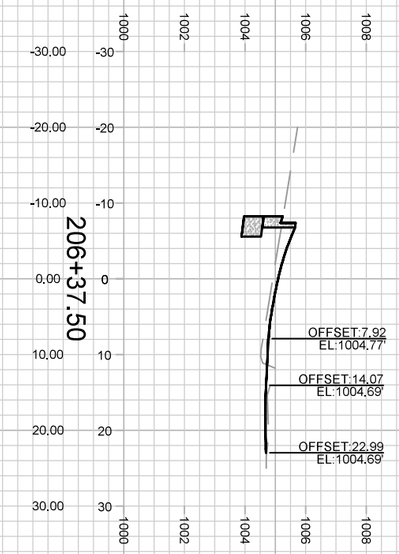

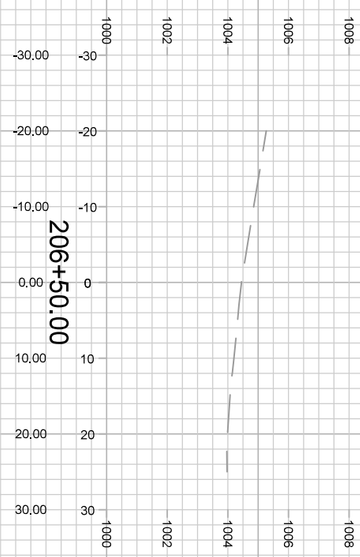

CROSS SECTIONS - VERONA ROAD SIDEWALK		14774	
4649 VERONA ROAD		MADISON, WI	
M:\DESIGN\Projects\14774\CAD\Streets\14774EN-AliProf&Corridor_Setup.dwg	CONTRACT NO:	9231	

MARK	REVISION	DATE	BY
###	###	###	###
###	###	###	###
###	###	###	###
###	###	###	###

Designed By: IO | Date: 7/7/2023 8:11 AM | Scale: 1" = 20'

14774 | X-8

14774 X-8

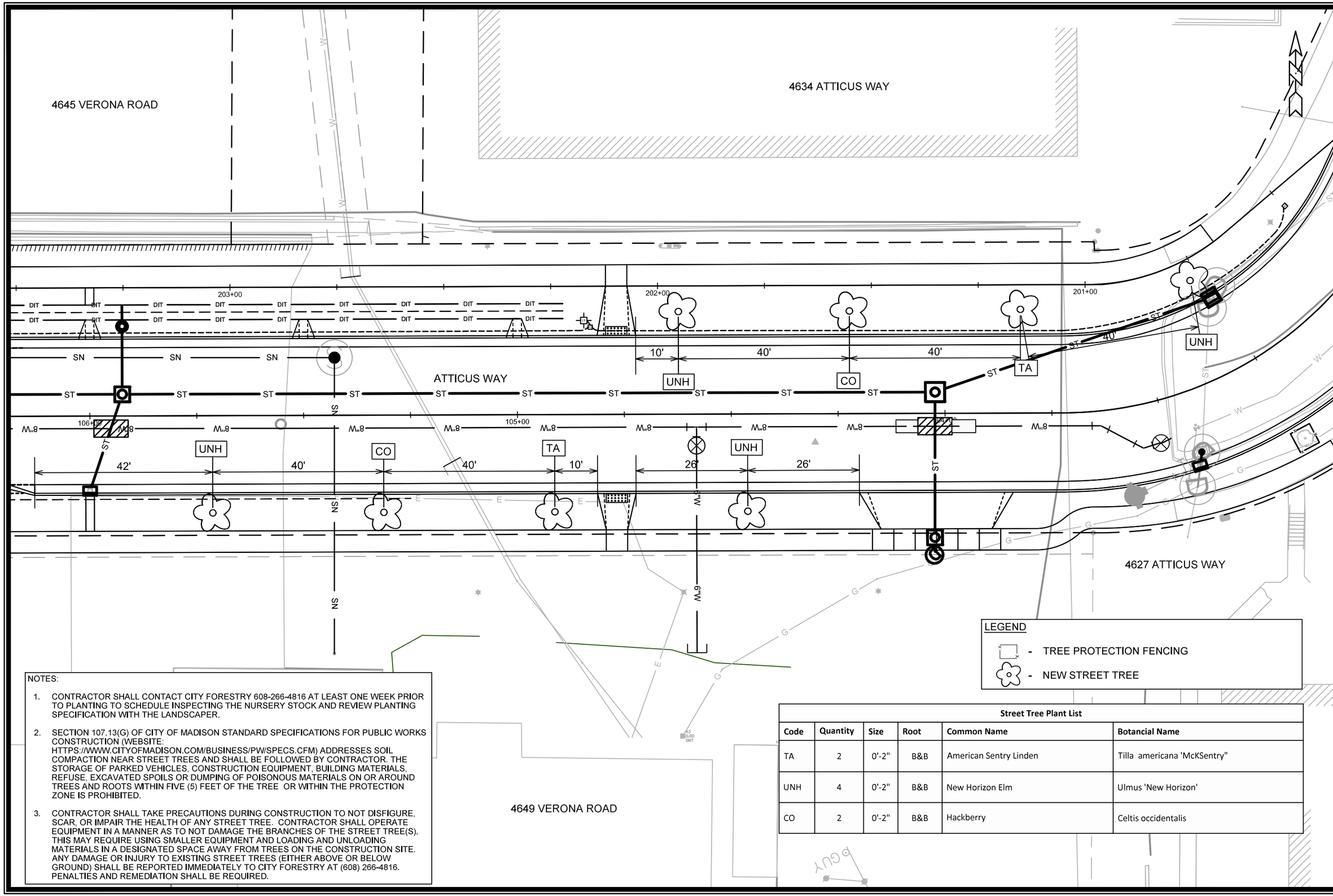

NOTES:

1. CONTRACTOR SHALL CONTACT CITY FORESTRY 608-266-4816 AT LEAST ONE WEEK PRIOR TO PLANTING TO SCHEDULE INSPECTING THE NURSERY STOCK AND REVIEW PLANTING SPECIFICATION WITH THE LANDSCAPER.
2. SECTION 107.13(G) OF CITY OF MADISON STANDARD SPECIFICATIONS FOR PUBLIC WORKS CONSTRUCTION (WEBSITE: HTTPS://WWW.CITYOFMADISON.COM/BUSINESS/PW/SPECS.CFM) ADDRESSES SOIL COMPACTION NEAR STREET TREES AND SHALL BE FOLLOWED BY CONTRACTOR. THE STORAGE OF PARKED VEHICLES, CONSTRUCTION EQUIPMENT, BUILDING MATERIALS, REFUSE, EXCAVATED SPOILS OR DUMPING OF POISONOUS MATERIALS ON OR AROUND TREES AND ROOTS WITHIN FIVE (5) FEET OF THE TREE OR WITHIN THE PROTECTION ZONE IS PROHIBITED.
3. CONTRACTOR SHALL TAKE PRECAUTIONS DURING CONSTRUCTION TO NOT DISFIGURE, SCAR, OR IMPAIR THE HEALTH OF ANY STREET TREE. CONTRACTOR SHALL OPERATE EQUIPMENT IN A MANNER AS TO NOT DAMAGE THE BRANCHES OF THE STREET TREE(S). THIS MAY REQUIRE USING SMALLER EQUIPMENT AND LOADING AND UNLOADING MATERIALS IN A DESIGNATED SPACE AWAY FROM TREES ON THE CONSTRUCTION SITE. ANY DAMAGE OR INJURY TO EXISTING STREET TREES (EITHER ABOVE OR BELOW GROUND) SHALL BE REPORTED IMMEDIATELY TO CITY FORESTRY AT (608) 266-4816. PENALTIES AND REMEDIATION SHALL BE REQUIRED.

Street Tree Plant List

Code	Quantity	Size	Root	Common Name	Botancial Name
TA	2	0'-2"	B&B	American Sentry Linden	Tilla americana 'McKSentry"
UNH	4	0'-2"	B&B	New Horizon Elm	Ulmus 'New Horizon'
CO	2	0'-2"	B&B	Hackberry	Celtis occidentalis

MARK	REVISION	DATE	BY
###	###	###	###
###	###	###	###
###	###	###	###
###	###	###	###

Designed By: IO
Date: 7/7/2023 8:08 AM
Scale: 1:20
14774
L-1

14774

MADISON, WI

9231

CONTRACT NO:

STREET TREE PLANTING PLAN

4649 VERONA ROAD

M:\DESIGN\Projects\14774\CAD\Streets\14774EN-Landscaping.dwg

CITY OF MADISON WISCONSIN

14774

L-1

CONC. WATERWAY REQUIRES
SNOW REMOVAL BY CITY

4645 VERONA ROAD

4633 VERONA ROAD

4651 VERONA ROAD

ATTICUS WAY

4629 ATTICUS WAY

4687 VERONA ROAD

4649 VERONA ROAD

RED ARROW TRAIL

MAINTENANCE LEGEND:

- = TERRACE REQUIRE MOWING BY CITY
- = SIDEWALK AND BIKE PATHS REQUIRE SNOW REMOVAL BY CITY
- = BUS STOP PAD REQUIRES SNOW REMOVAL BY CITY
- =CROSSWALK OR CONCRETE WATERWAY REQUIRE SNOW REMOVAL BY CITY)
- = PRIVATELY MAINTAINED (MEDIANS, ISLAND, ROUNDABOUTS & PRIVATE OUTLOTS)
- = PUBLIC CITY ENGINEERING STORMWATER PROPERTY
- = PUBLIC CITY PARK PROPERTY
- = PRIVATE OUTLOT
- = PHASE BOUNDARY

SPECIAL FEATURES LEGEND:

- = SUSPENDED PAVEMENT SYSTEM
- = STORM WATER FEATURE
- = UNDERDRAIN

NOT FOR CONSTRUCTION - CITY RECORDS ONLY

MARK	REVISION	DATE	BY
###	###	###	###
###	###	###	###
###	###	###	###
###	###	###	###

Designed By: ### Date: 7/7/2023 8:03 AM Scale: 1:50

14774

MN-1

14774

MADISON, WI

CONTRACT NO: 9231

MAINTENANCE PLAN

4649 VERONA ROAD

M:\DESIGN\Projects\14774\CAD\Streets\14774EN-Maintenance.dwg

14774

MN-1