CITY OF MADISON

CITY ENGINEERING DIVISION
DEPARTMENT OF PUBLIC WORKS
PLAN OF PROPOSED IMPROVEMENT

Madison, Wisconsin

LUDS LANE AND FEMRITE DRIVE CSM

CITY PROJECT NO. 14950
CONTRACT NO. 9481

INDEX OF SHEETS

SHEET NO.	D1	STANDARD NOTES
SHEET NO.	D2-D5	TYPICAL SECTIONS
SHEET NO.	O1	OVERVIEW PLAN
SHEET NO.	ST1-ST2	NOTES & SPECIFICATIONS
SHEET NO.	ST3	WET BASIN DETAILS & SPECIFICATIONS
SHEET NO.	ST4	GRASSED SWALE DETAILS & SPECIFICATIONS
SHEET NO.	ST5-ST6	GRADING & EROSION CONTROL PLAN
SHEET NO.	P1-P8	STREET PLAN & PROFILES
SHEET NO.	U1-U7	SEWER PLAN & PROFILES
SHEET NO.	U8	SANITARY SEWER SCHEDULE
SHEET NO.	U9	STORM SEWER SCHEDULE
SHEET NO.	WI-W6	WATER PLAN & PROFILE
SHEET NO.	W7	WATER IMPACT PLAN
SHEET NO.	W8	WATER ESTIMATE OF MATERIALS
SHEET NO.	PM1-PM3	PAVEMENT MARKING PLAN
SHEET NO.	X1-X19	CROSS SECTIONS
SHEET NO.	MN1	MAINTENANCE PLAN (CITY USE ONLY)

PROJECT LOCATION

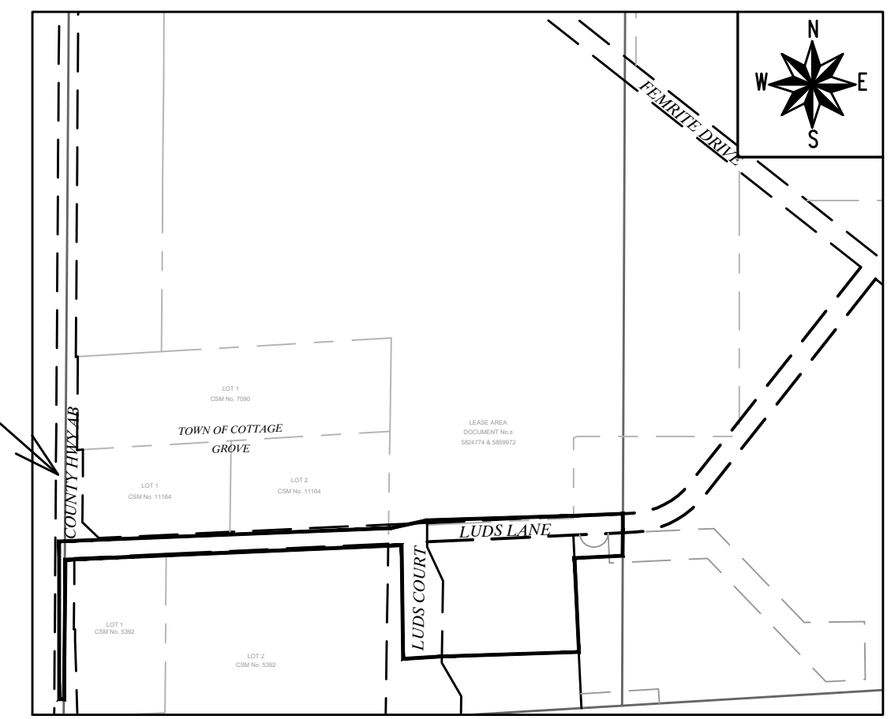

REVISION
REV #1 - U7, & U9 updated.
REV #2 - W4, W7, & W8 updated.
REV #3 - P1, P7, P8, U1-U3, U8, U9, W1, W2, PM1-3 updated.

PUBLIC IMPROVEMENT PROJECT APPROVED

MAY 21, 2024

BY THE COMMON COUNCIL OF MADISON, WISCONSIN

PUBLIC IMPROVEMENT DESIGN APPROVED BY:

Oct 23, 2024

City Engineer — Date

PAVEMENT MARKING DESIGNED BY:

WISCONSIN SEAN D MALLOY E-48326 MADISON WI PROFESSIONAL ENGINEER

Oct 23, 2024

STREET DESIGNED BY:

WISCONSIN FADI B EL MUSA GONZALEZ E-47872 MADISON WI PROFESSIONAL ENGINEER

Oct 23, 2024

WATER DESIGNED BY:

WISCONSIN ADAM R. WIEDERHOEFT E-41559 MADISON WI PROFESSIONAL ENGINEER

Oct 24, 2024

SANITARY SEWER DESIGNED BY:

WISCONSIN MARK D. MODER E-33979 MADISON WI PROFESSIONAL ENGINEER

Oct 23, 2024

STORM WATER MANAGEMENT DETAILS DESIGNED BY:

WISCONSIN MATTHEW SAUNDERS E-49213-6 BELLEVILLE, WI PROFESSIONAL ENGINEER

Oct 24, 2024

STORM SEWER DESIGNED BY:

WISCONSIN GREGORY T. FRIES E-30656 MADISON WI PROFESSIONAL ENGINEER

Oct 23, 2024

PLOT SCALE: 1:1_XREF
PLOT NAME: ---
REV. DATE: 10/23/2024 7:24 AM
ORIGINATOR: CITY_OF_MADISON

FILE NAME: M:\DESIGN\Projects\14950\CAD\Streets\14950EN-TitleSheet.dwg
DATE: 10/23/2024 11:34 AM

ALL PROPOSED STREET TREE REMOVALS WITHIN THE RIGHT OF WAY SHALL BE REVIEWED BY CITY FORESTRY BEFORE THE PLAN COMMISSION MEETING. STREET TREE REMOVALS REQUIRE APPROVAL AND A TREE REMOVAL PERMIT ISSUED BY CITY FORESTRY. ANY STREET TREE REMOVALS REQUESTED AFTER THE DEVELOPMENT PLANS ARE APPROVED BY THE PLAN COMMISSION OR THE BOARD OF PUBLIC WORKS AND CITY FORESTRY WILL REQUIRE A MINIMUM OF A 72-HOUR REVIEW PERIOD WHICH SHALL INCLUDE THE NOTIFICATION OF THE ALDERPERSON WITHIN WHO'S DISTRICT IS AFFECTED BY THE STREET TREE REMOVAL(S) PRIOR TO A TREE REMOVAL PERMIT BEING ISSUED.

AS DEFINED BY SECTION 107.13 OF THE CITY OF MADISON STANDARD SPECIFICATIONS FOR PUBLIC WORKS CONSTRUCTION, LATEST EDITION: NO EXCAVATION IS PERMITTED WITHIN 5 FEET OF THE TRUNK OF THE STREET TREE OR WHEN CUTTING ROOTS OVER 3 INCHES IN DIAMETER. IF EXCAVATION IS NECESSARY, THE CONTRACTOR SHALL CONTACT MADISON CITY FORESTRY (266-4816) PRIOR TO EXCAVATION. CITY OF MADISON FORESTRY PERSONNEL SHALL ASSESS THE IMPACT TO THE TREE AND TO ITS ROOT SYSTEM PRIOR TO WORK COMMENCING. TREE PROTECTION SPECIFICATIONS CAN BE FOUND ON THE FOLLOWING WEBSITE: www.cityofmadison.com/engineering/developers-contractors/standard-specifications

THE LOCATION AND INFORMATION FOR PROPOSED NEW TREES, IN THE PUBLIC RIGHT OF WAY OR ON PUBLIC LANDS ARE APPROXIMATE AND ARE SHOWN FOR REFERENCE ONLY. THE LOCATIONS, SPECIFICATIONS AND PLANTING METHODS OF ALL PROPOSED NEW OR REPLACEMENT TREES IN THE PUBLIC RIGHT OF WAY OR ON PUBLIC LANDS SHALL BE APPROVED BY THE CITY FORESTER PRIOR TO INSTALLATION.

NO TREES IN THE RIGHT OF WAY OR ON PUBLIC LANDS SHALL BE TRIMMED, PRUNED, REMOVED OR ADVERSELY AFFECTED IN ANY WAY UNTIL THE DEVELOPER HAS RECEIVED WRITTEN PERMISSION FROM THE CITY ENGINEER OR CITY FORESTER. SAID WRITTEN PERMISSION SHALL INCLUDE LANGUAGE INDICATING THAT SECTION 10.101 OF THE MADISON GENERAL ORDINANCES AND ADMINISTRATIVE PROCEDURE MEMORANDUM NO. 6-2, REFERRING TO NOTIFICATION OF PROPERTY OCCUPANTS AND/OR OWNERS, HAS BEEN COMPLIED WITH.

DEVELOPER MUST SUBMIT A TRAFFIC CONTROL PLAN TO CITY TRAFFIC ENGINEERING AT LEAST 14 DAYS PRIOR TO THE START OF WORK. WORK SHALL NOT PROCEED UNTIL AN APPROVED TRAFFIC CONTROL PLAN IS IN PLACE.

CONTACT THE PROJECT ENGINEER AND DESIGNER, IKE OKAFOR, AT IOKAFOR@CITYOFMADISON.COM FOR CAD FILES AND ALIGNMENT DATA PRIOR TO STAKING.

CONVENTIONAL SIGNS
FIELD VERIFY ALL UTILITY LOCATIONS

GAS	G
STORM SEWER	ST
SANITARY SEWER	SAN
WATER	W
BURIED ELECTRIC	E
OVERHEAD ELECTRIC	OH
POWER POLE	
ADA COMPLIANT RAMP W/ DETECTABLE WARNING FIELD	
COMBUSTIBLE FLUIDS	CAUTION

ALL PAVEMENT IN THE LUDS LANE, LUDS COURT AND COUNTY HIGHWAY A-B RIGHTS-OF-WAY SHALL BE TYPE C PAVEMENT PER STANDARD DETAIL DRAWING 4.02.

UNDERDRAINS SHALL BE INSTALLED PER STANDARD DETAIL DRAWING 4.05 FOR 75' ON EACH SIDE OF THE LOW POINT, OR TO THE NEAREST CURB HIGH POINT. ALL UNDERDRAIN SHALL BE WRAPPED.

ALL GUTTERS SHALL DRAIN WITH A MINIMUM GRADE OF 0.5% TOWARD STORM SEWER INLETS.

ALL DITCHES SHALL DRAIN WITH A MINIMUM GRADE OF 0.5%

THE CROSS SLOPE OF SIDEWALKS AND BARRIER FREE SIDEWALK CURB RAMPS SHALL TYPICALLY BE 1.5%. THE LONGITUDINAL GRADE OF BARRIER FREE SIDEWALK CURB RAMPS SHALL NOT EXCEED 8.33%. ALL SIDEWALK RAMPS SHALL BE CONSTRUCTED ACCORDING TO S.D.D. 3.04. AT ALL OTHER LOCATIONS THE LONGITUDINAL GRADE OF SIDEWALKS SHALL NOT EXCEED 5.0 % OR THE ADJACENT STREET GRADE WHICHEVER IS GREATER NOR BE LESS THAN 0.5% AND SHALL DRAIN TOWARD STORM SEWER INLETS. SIDE SLOPES WITHIN TEN FEET OF A PUBLIC SIDEWALK SHALL NOT EXCEED 4:1. ALL SIDEWALK AND SIDEWALK RAMP ELEVATIONS AND GRADES SHALL BE FIELD VERIFIED AND SET TO COMPLY WITH THE CITY OF MADISON STANDARD SPECIFICATIONS AND THE A.D.A. GUIDELINES.

CURB STATION AND OFFSETS SHALL BE TO THE EDGE OF PAVEMENT UNLESS OTHERWISE INDICATED. CURB ELEVATIONS SHALL BE TO THE EDGE OF PAVEMENT UNLESS OTHERWISE INDICATED.

POWER POLES AND OTHER OBSTRUCTIONS SHALL BE MOVED TO PROVIDE 2 FEET MINIMUM OF CLEAR DISTANCE FROM ANY FACE OF CURB OR EDGE OF SIDEWALK UNLESS OTHERWISE INDICATED ON THE PLANS.

ANY INFORMATION SHOWN ON THIS PLAN, WHICH IS NOT PART OF THIS RIGHT-OF-WAY PROJECT, IS PRELIMINARY AND NOT FOR CONSTRUCTION.

THERE MAY BE EXISTING UTILITIES OR OTHER FEATURES WHICH ARE EITHER NOT SHOWN OR SHOWN INCORRECTLY ON THIS PLAN. IT IS THE RESPONSIBILITY OF THE DEVELOPER TO LOCATE AND IDENTIFY ALL UTILITIES AND TOPOGRAPHY WHICH MAY AFFECT THE CONSTRUCTION OF THESE IMPROVEMENTS.

ALL PERMANENT SIGNING AND POSTING WILL BE DETERMINED AND PROVIDED BY THE TRAFFIC ENGINEERING DIVISION, FOLLOWING CONSTRUCTION OF THESE IMPROVEMENTS.

THE DEVELOPER SHALL PROVIDE, INSTALL AND MAINTAIN ALL STREET END BARRICADES, SIGNING AND TRAFFIC CONTROL, AS REQUIRED BY THE CITY TRAFFIC ENGINEER.

PAVEMENT SAWCUTS SHALL BE AS DIRECTED BY THE CITY CONSTRUCTION ENGINEER. SAWCUTS SHOWN ON THE PLAN ARE APPROXIMATE.

CURB ON CUL DE SACS SHALL BE INSTALLED ACCORDING TO S.D.D 3.05.

ALL WORK IN THE RIGHT OF WAY AND PUBLIC EASEMENTS SHALL BE IN ACCORDANCE WITH THE CITY OF MADISON STANDARD SPECIFICATIONS FOR PUBLIC WORKS CONSTRUCTION, LATEST EDITION.

ALL PROPOSED IMPROVEMENTS IN THE RIGHT-OF-WAY ARE BASED ON SURVEY DATA PROVIDED BY THE DEVELOPER OR ITS CONSULTANT. IN THE CASE THAT THE PROPOSED IMPROVEMENTS CAN NOT BE INSTALLED PER THESE PLANS OR THE CITY OF MADISON STANDARD SPECIFICATION FOR PUBLIC WORKS CONSTRUCTION, LATEST EDITION, THE DEVELOPER SHALL BE RESPONSIBLE FOR THE COST OF EXTRA WORK DUE TO INACCURACIES OF THE SURVEY.

ALL UTILITY VERIFICATIONS AND ACCURACY OF THE DRAWINGS ARE THE RESPONSIBILITY OF THE DEVELOPER. ANY CONFLICTS THAT ARISE FROM MISSING OR ERRONEOUS INFORMATION WILL BE AT THE EXPENSE OF THE DEVELOPER. NO PRECAST STRUCTURES WILL BE APPROVED FOR STORM OR SANITARY SEWER UNTIL ALL POTENTIAL UTILITY CONFLICTS ARE RESOLVED.

IN LOCATIONS WHERE PAVEMENT RESTORATION IS NOT IDENTIFIED ADJACENT TO CURB AND GUTTER REPLACEMENT, IT IS ASSUMED THAT CURB AND GUTTER WILL BE REPLACED WITHOUT DAMAGING ADJACENT PAVEMENT. IF DAMAGED, THE MILL AND OVERLAY LIMITS SHALL BE EXTENDED BY THE CITY CONSTRUCTION ENGINEER AS NECESSARY TO MEET THE STANDARD PATCHING CRITERIA.

MARK	REVISION	DATE	BY
---	---	---	---
---	---	---	---
---	---	---	---
---	---	---	---

Designed By: IO
Date: 10/22/2024 2:45 PM
Scale:
14950
D-1

14950

MADISON, WI

CONTRACT NO: 9481

STANDARD NOTES

LUDS LANE AND FEMRITE DRIVE CSM

M:\DESIGN\Projects\14950\CAD\Streets\14950EN-Details.dwg

14950

D-1

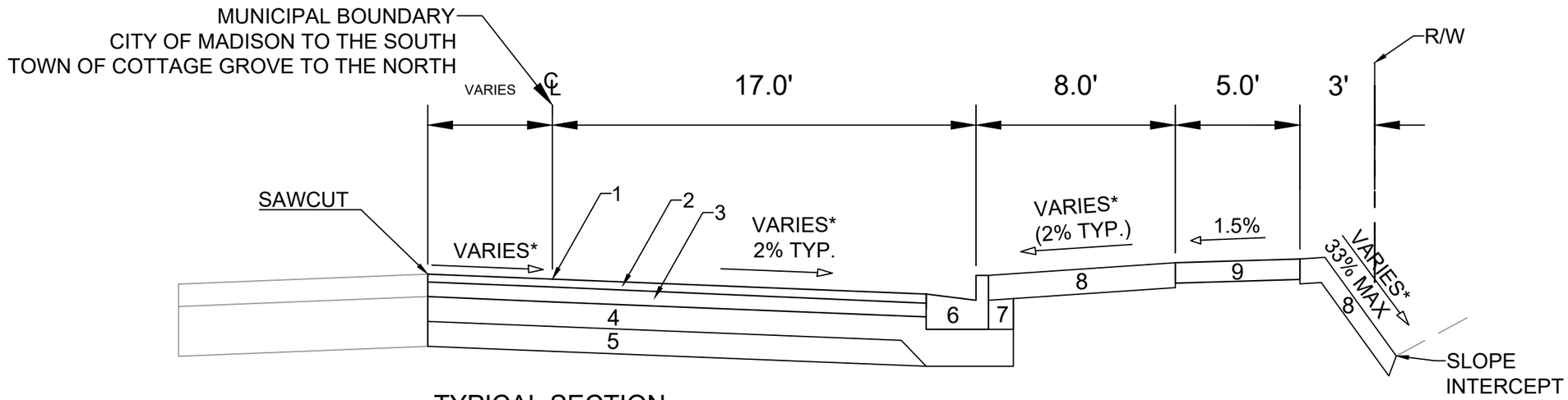

TYPICAL SECTION

LUDS LANE
STA15+65 TO STA 20+50
(NOT TO SCALE)

1 POINT REFERRED TO ON PROFILE
2 2.0" H.M.A. PAVEMENT- TYPE 4 MT 58-28 S
3 3.5" H.M.A. PAVEMENT- TYPE 3 MT 58-28 S
4 6" CRUSHED AGGREGATE BASE COURSE GRADATION 2
5 6" CRUSHED AGGREGATE BASE COURSE GRADATION 1
6 CONCRETE CURB AND GUTTER TYPE 'A'.
7 FILL
8 6" TOPSOIL, SEED AND MATTING
9 5" CONCRETE SIDEWALK

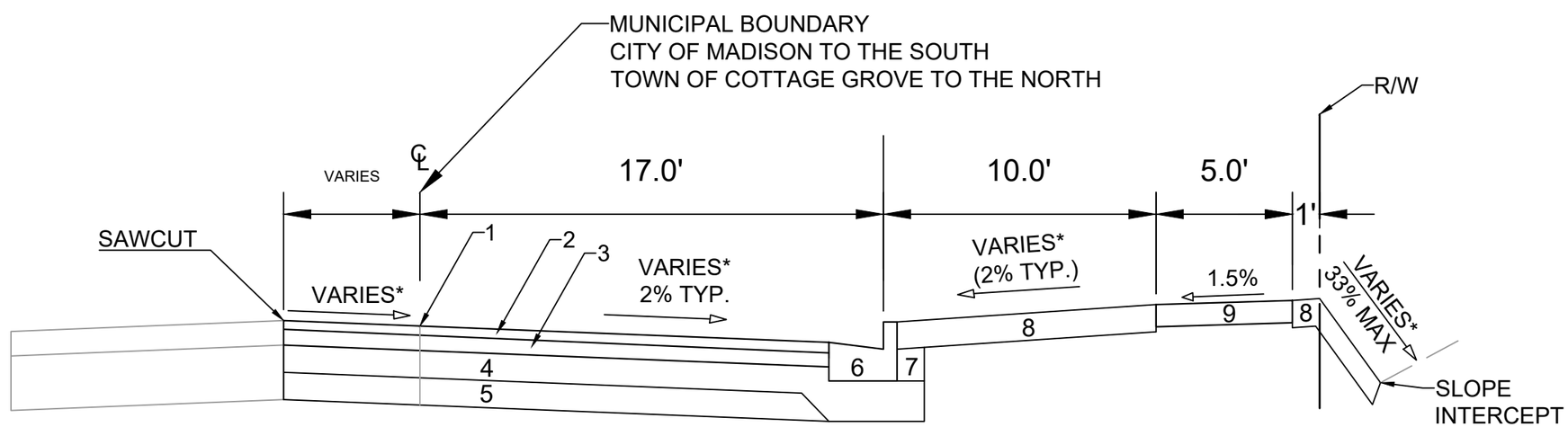

TYPICAL SECTION

LUDS LANE
STA13+05 TO STA15+65
STA20+50 TO STA22+69
(NOT TO SCALE)

1 POINT REFERRED TO ON PROFILE
2 2.0" H.M.A. PAVEMENT- TYPE 4 MT 58-28 S
3 3.5" H.M.A. PAVEMENT- TYPE 3 MT 58-28 S
4 6" CRUSHED AGGREGATE BASE COURSE GRADATION 2
5 6" CRUSHED AGGREGATE BASE COURSE GRADATION 1
6 CONCRETE CURB AND GUTTER TYPE 'A'.
7 FILL
8 6" TOPSOIL, SEED AND MATTING
9 5" CONCRETE SIDEWALK

SPECIAL NOTES:

*SEE P & X SHEETS FOR CROSS SLOPES

MARK	REVISION	DATE	BY
---	---	---	---
---	---	---	---
---	---	---	---
---	---	---	---
---	---	---	---

Designed By: IO
Date: 10/22/2024 2:45 PM
Scale:
14950
D-2

14950
MADISON, WI
9481
CONTRACT NO:

TYPICAL SECTIONS
LUDS LANE AND FEMRITE DRIVE CSM
M:\DESIGN\Projects\14950\CAD\Streets\14950EN-Details.dwg

14950
D-2

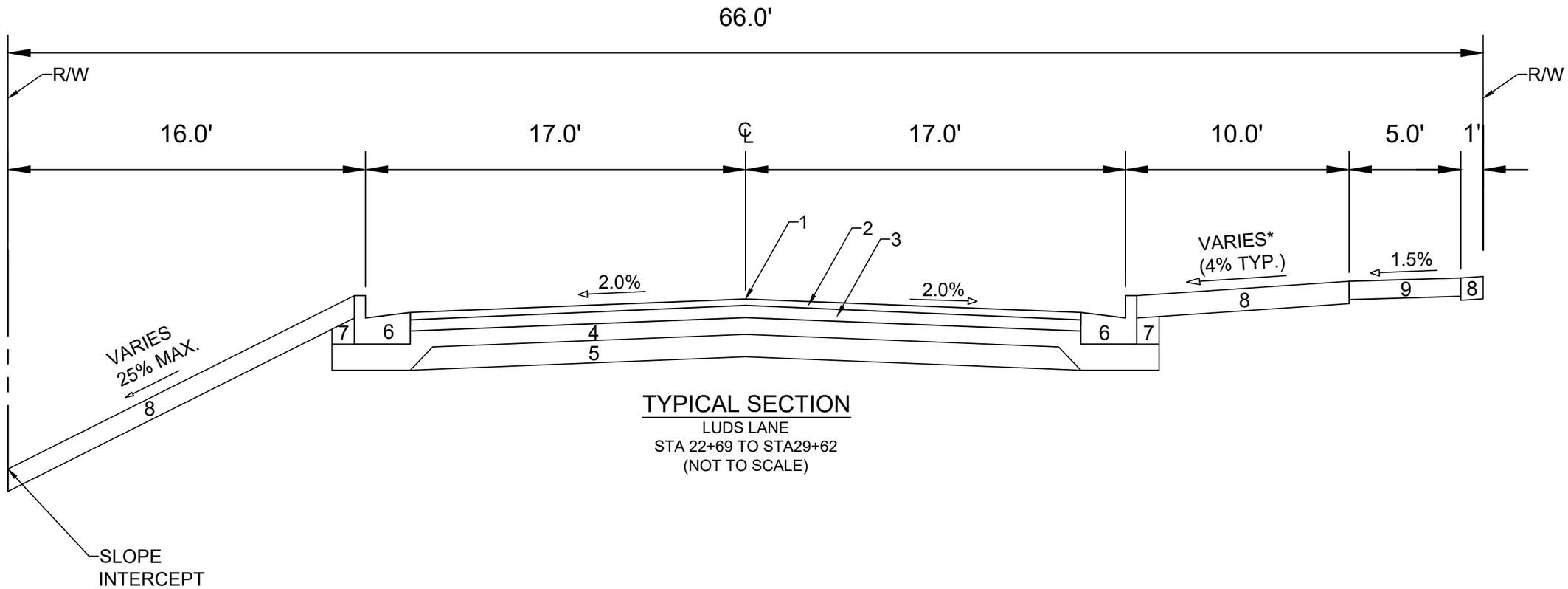

TYPICAL SECTION

LUDS LANE
STA 22+69 TO STA29+62
(NOT TO SCALE)

1 POINT REFERRED TO ON PROFILE
2 2.0" H.M.A. PAVEMENT- TYPE 4 MT 58-28 S
3 3.5" H.M.A. PAVEMENT- TYPE 3 MT 58-28 S
4 6" CRUSHED AGGREGATE BASE COURSE GRADATION 2
5 6" CRUSHED AGGREGATE BASE COURSE GRADATION 1
6 CONCRETE CURB AND GUTTER TYPE 'A'.
7 FILL
8 6" TOPSOIL, SEED AND MATTING
9 5" CONCRETE SIDEWALK

SPECIAL NOTES:

*SEE P & X SHEETS FOR CROSS SLOPES

MARK	REVISION	DATE	BY
---	---	---	---
---	---	---	---
---	---	---	---
---	---	---	---

Designed By: IO
Date: 10/22/2024 2:45 PM
Scale:
14950
D-3

14950

MADISON, WI

CONTRACT NO: 9481

TYPICAL SECTIONS

LUDS LANE AND FEMRITE DRIVE CSM

M:\DESIGN\Projects\14950\CAD\Streets\14950EN-Details.dwg

CITY OF MADISON WISCONSIN

14950

D-3

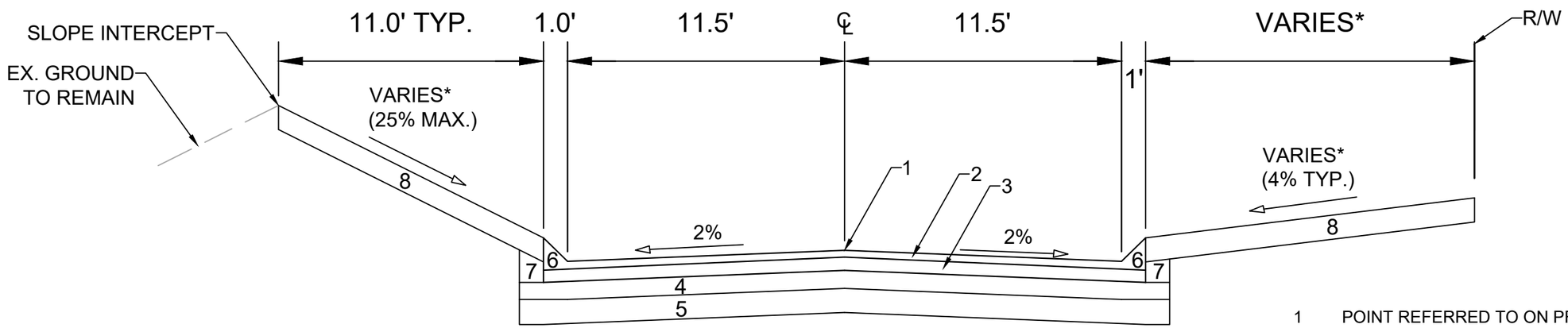

TYPICAL SECTION

LUDS COURT
STA 52+00 TO LUDS LANE

1 POINT REFERRED TO ON PROFILE
2 2.0" H.M.A. PAVEMENT- TYPE 4 MT 58-28 S
3 3.5" H.M.A. PAVEMENT- TYPE 3 MT 58-28 S
4 6" CRUSHED AGGREGATE BASE COURSE GRADATION 2
5 6" CRUSHED AGGREGATE BASE COURSE GRADATION 1
6 ASPHALTIC CURB & GUTTER, SEE DETAIL
7 FILL
8 6" TOPSOIL, SEED AND MATTING
9 5" CONCRETE SIDEWALK

SPECIAL NOTES:

*SEE P & X SHEETS FOR CROSS SLOPES

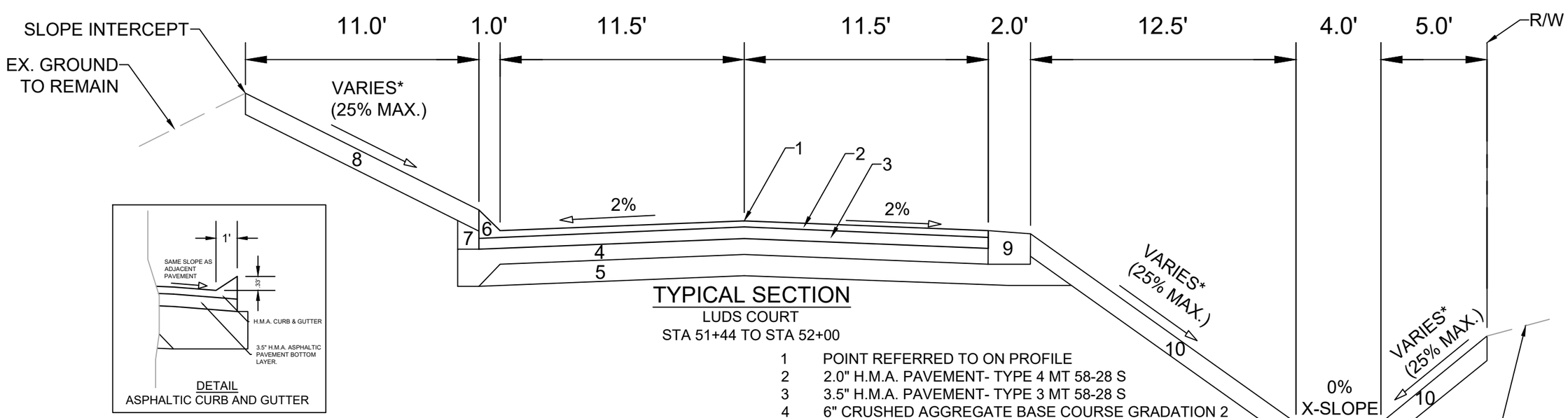

DETAIL
ASPHALTIC CURB AND GUTTER

TYPICAL SECTION

LUDS COURT
STA 51+44 TO STA 52+00

1 POINT REFERRED TO ON PROFILE
2 2.0" H.M.A. PAVEMENT- TYPE 4 MT 58-28 S
3 3.5" H.M.A. PAVEMENT- TYPE 3 MT 58-28 S
4 6" CRUSHED AGGREGATE BASE COURSE GRADATION 2
5 6" CRUSHED AGGREGATE BASE COURSE GRADATION 1
6 ASPHALTIC CURB & GUTTER, SEE DETAIL
7 FILL
8 6" TOPSOIL, SEED AND MATTING
9 5.5" CRUSHED AGGREGATE BASE COURSE GRADATION 3
10 6" TOPSOIL, SEED, AND EROSION MAT CLASS II, URBAN TYPE B

SPECIAL NOTES:

*SEE P & X SHEETS FOR CROSS SLOPES

MARK	REVISION	DATE	BY
---	---	---	---
---	---	---	---
---	---	---	---
---	---	---	---

Designed By: IO
Date: 10/22/2024 2:45 PM
Scale:
14950
D-4

14950
MADISON, WI
9481
CONTRACT NO:

TYPICAL SECTIONS
LUDS LANE AND FEMRITE DRIVE CSM
M:\DESIGN\Projects\14950\CAD\Streets\14950EN-Details.dwg

14950
D-4

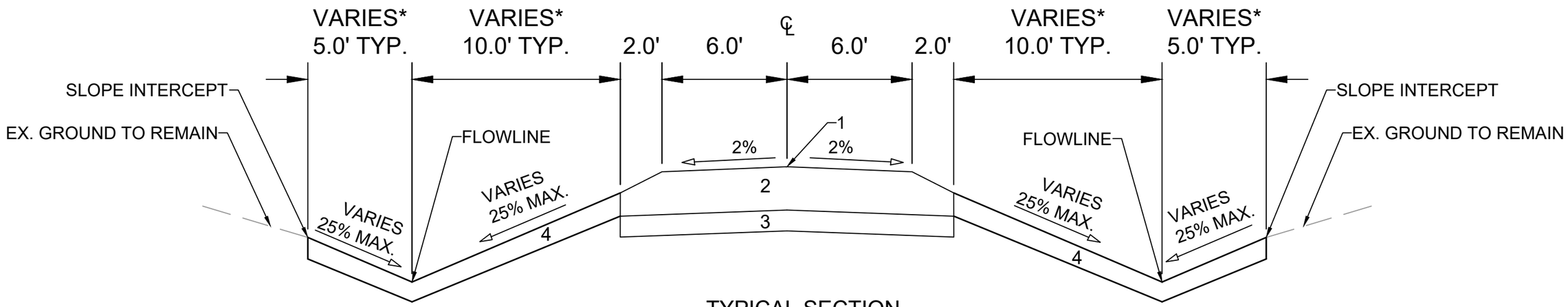

TYPICAL SECTION

SANITARY MAINTENANCE PATH N-S AND W-E
(NOT TO SCALE)

SPECIAL NOTES:

*SEE P & X SHEETS FOR CROSS SLOPES

1 POINT REFERRED TO ON PROFILE.
2 10" CRUSHED AGGREGATE BASE COURSE GRADATION 2.
3 FILL
4 6" TOPSOIL, NATIVE SEED MIX AND MATTING.

MARK	REVISION	DATE	BY
---	---	---	---
---	---	---	---
---	---	---	---
---	---	---	---

Designed By: IO
Date: 10/22/2024 2:45 PM
Scale:
14950
D-5

14950
MADISON, WI
CONTRACT NO: 9481

TYPICAL SECTIONS
LUDS LANE AND FEMRITE DRIVE CSM
M:\DESIGN\Projects\14950\CAD\Streets\14950EN-Details.dwg

14950
D-5

LEGEND

SURFACE PAVING BY DEVELOPER
UNDER CONTRACT NO. 9481

TOWN OF COTTAGE GROVE

LUDS LANE

7501 LUDS LANE

7625 LUDS LANE

LUDS COURT

PROPOSED DEVELOPMENT
DANE COUNTY PSC FACILITY

MARK	REVISION	DATE	BY
---	---	---	---
---	---	---	---
---	---	---	---
---	---	---	---
---	---	---	---

Designed By: IO
Date: 10/14/2024 11:06 AM
Scale: 1:120

14950

O-1

14950

MADISON, WI

CONTRACT NO: 9481

OVERVIEW PLAN

LUDS LANE AND FEMRITE DRIVE CSM

M:\DESIGN\Projects\14950\CAD\Streets\14950EN-Landscaping.dwg

CITY OF MADISON WISCONSIN

14950

O-1

REVISION #3

LEGEND

=DRAINAGE FLOW PATH

=PAVEMENT SAWCUT

=3.5" MILL & OVERLAY, 2 LIFTS OF TYPE 4 MT 58-28 S. LIMITS SHOWN ARE APPROXIMATE AND CAN BE MODIFIED BY THE CITY CONSTRUCTION ENGINEER WITH APPROVAL FROM DANE COUNTY HIGHWAY.

=10" CONCRETE SIDEWALK AND DRIVE APRON

TOWN OF
COTTAGE GROVE

MUNICIPAL LIMITS;
NORTH IS TOWN OF COTTAGE GROVE
SOUTH IS CITY OF MADISON

6" TOPSOIL,
SEED & MAT

CTY HWY AB

LUDS LANE

MATCH LINE 17+50.00

STA 12+91.67, 5.00' LT
889.90 SAWCUT PI/MATCH

5" CONCRETE
SIDEWALK

EX. ALLIANT ENERGY -
UNDGRD ELEC

EX. ALLIANT ENERGY
- GAS

SLOPE INTERCEPT

EX. MUFN - FIBER

THE DEVELOPER SHALL COORDINATE THE RELOCATION OR
ADJUSTMENT OF UTILITY STRUCTURE WITH UTILITY OWNER.

STA 13+05.79, 15
889.47 EP/PI

STA 12+91.67, 15.75' RT
889.72 EP/MATCH EX.

STA 12+92.95, 32.00' RT
890.23 BW/BEGIN SIDEWALK

STA 15+50.00, 32.00' RT
888.62 BW/ END 2% TERRACE

STA 15+61.97, 32.00' RT
888.39 BW/ PI

STA 15+71.97, 30.00' RT
888.18 BW/ PI

STA 15+84.48, 30.00' RT
887.78 BW/ BEGIN 10" SIDEWALK

STA 15+97.33, 30.00' RT
887.59 BW/ BEGIN DRIVEWAY

STA 17+00.00, 30.00' RT
886.28 BW/ BEG. 2% TERR.

STA 16+97.91, 42.00' RT
881.87 FL/DITCH PI*

STA 16+57.38, 30.00' RT
886.62 BW/ END DRIVEWAY

STA 16+48.12, 42.00' RT
885.92 SAWCUT/ MATCH EX DRIVEWAY

10" CONCRETE SIDEWALK & DRIVEWAY APRON

3" ASPHALT DRIVEWAY, 4 LT 58-28 S
INSTALL PER SECTION 402.3 OF THE CITY OF MADISON
STANDARD SPECIFICATIONS FOR PUBLIC WORKS
CONSTRUCTION, LATEST EDITION

STA 16+09.33, 42.03' RT
886.46 SAWCUT/ MATCH EX. DRIVEWAY

R/W

7501 LUDS LANE
DANE COUNTY MEDICAL EXAMINER

7625 LUDS LANE
DANE COUNTY EAST DISTRICT CAMPUS
HIGHWAY FACILITY

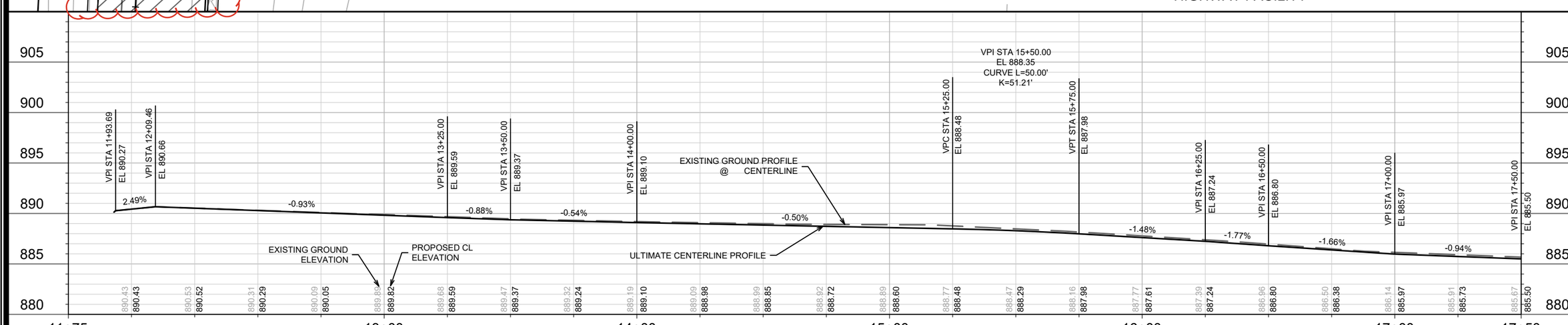

MARK	REVISION	DATE	BY
---	---	---	---
---	---	---	---
---	---	---	---
---	---	---	---
---	---	---	---

Designed By: IO | Date: 6/12/2025 11:12 AM | Scale: 1" = 40'

14950 | P-1

14950

MADISON, WI

9481

CONTRACT NO:

STREET PLAN & PROFILE - LUDS LANE

LUDS LANE AND FEMRITE DRIVE CSM

M:\DESIGN\Projects\14950\CAD\Streets\14950EN-PnP.dwg

CITY OF MADISON WISCONSIN

14950

P-1

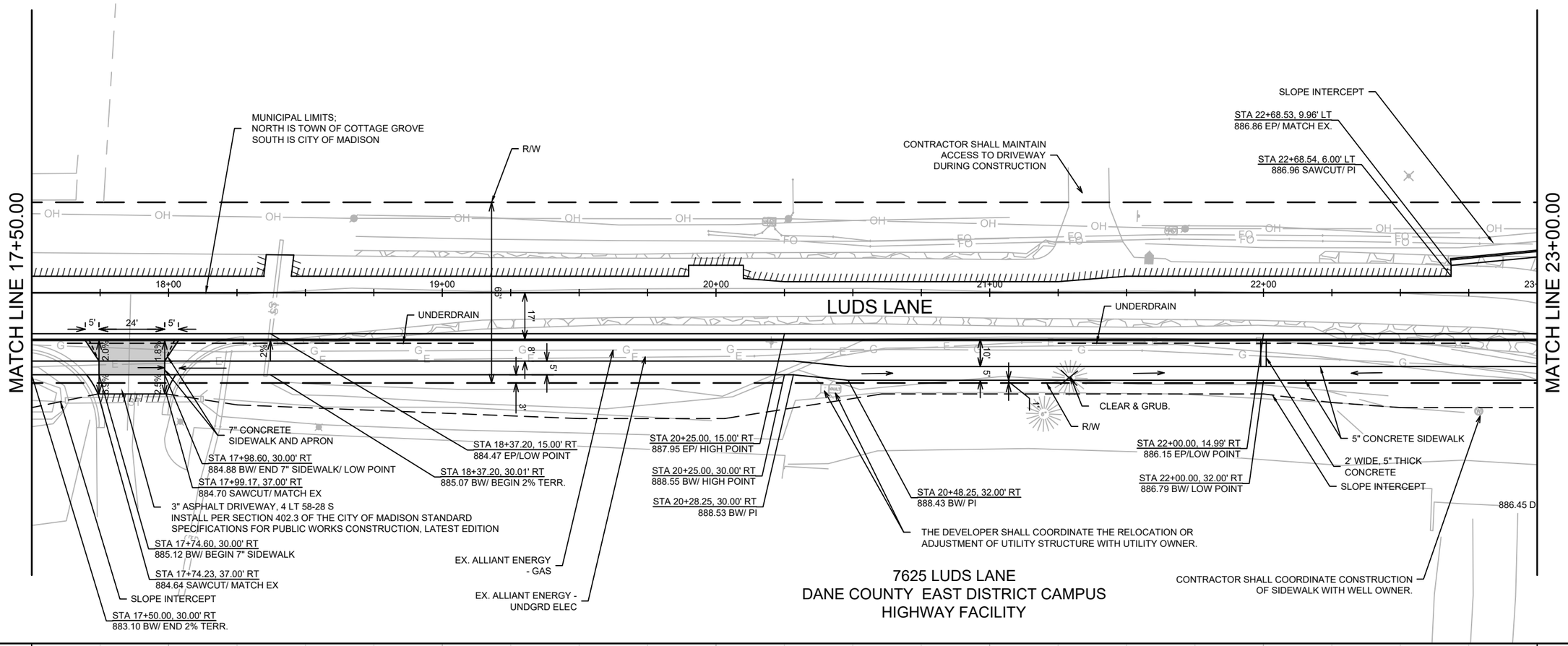

7625 LUDS LANE
DANE COUNTY EAST DISTRICT CAMPUS
HIGHWAY FACILITY

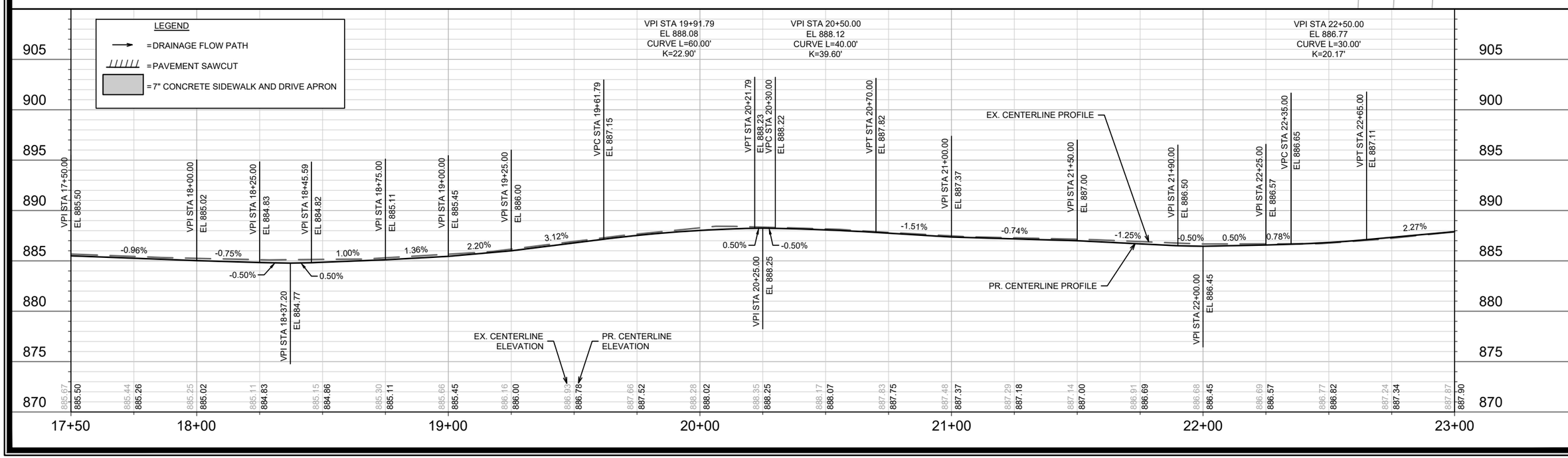

MARK	REVISION	DATE	BY
---	---	---	---
---	---	---	---
---	---	---	---
---	---	---	---
---	---	---	---

Designed By: IO | Date: 10/23/2024 11:27 AM | Scale: 1" = 40'

14950 | P-2

14950

MADISON, WI

9481

CONTRACT NO:

STREET PLAN & PROFILE - LUDS LANE

LUDS LANE AND FEMRITE DRIVE CSM

M:\DESIGN\Projects\14950\CAD\Streets\14950EN-PnP.dwg

14950

P-2

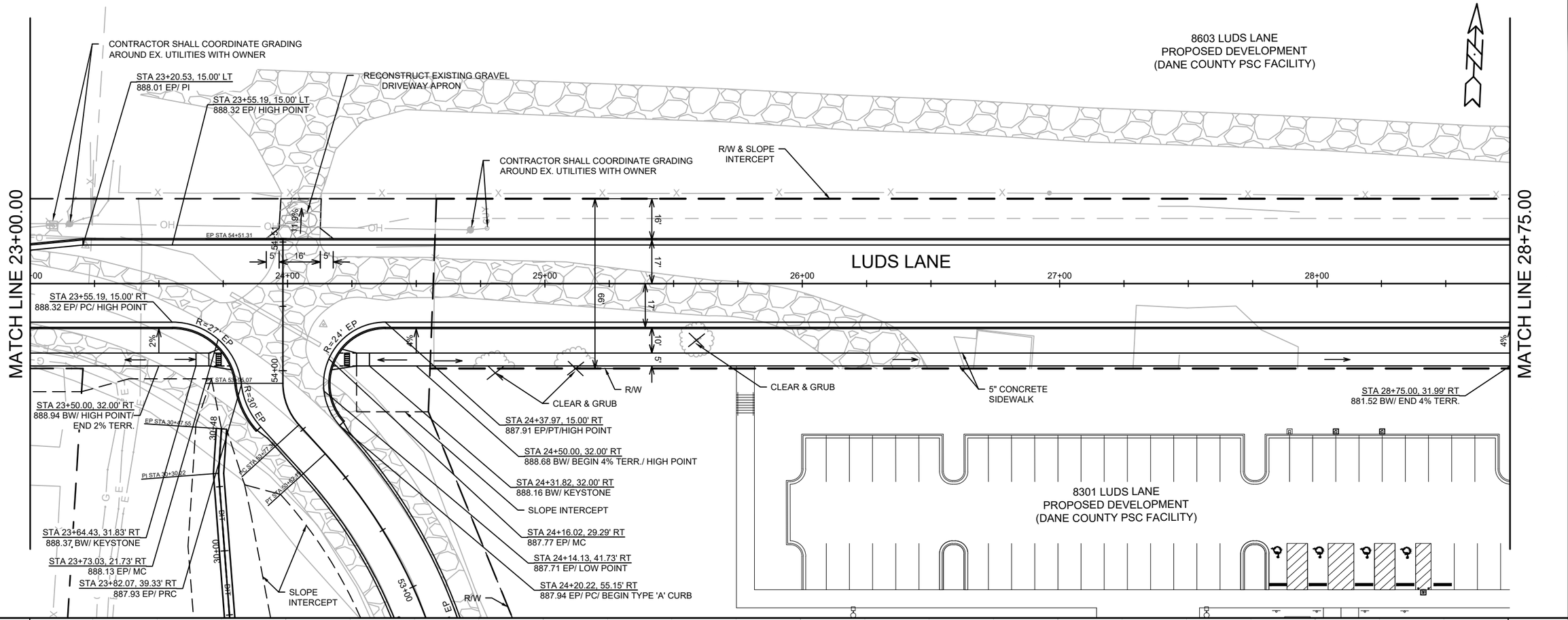

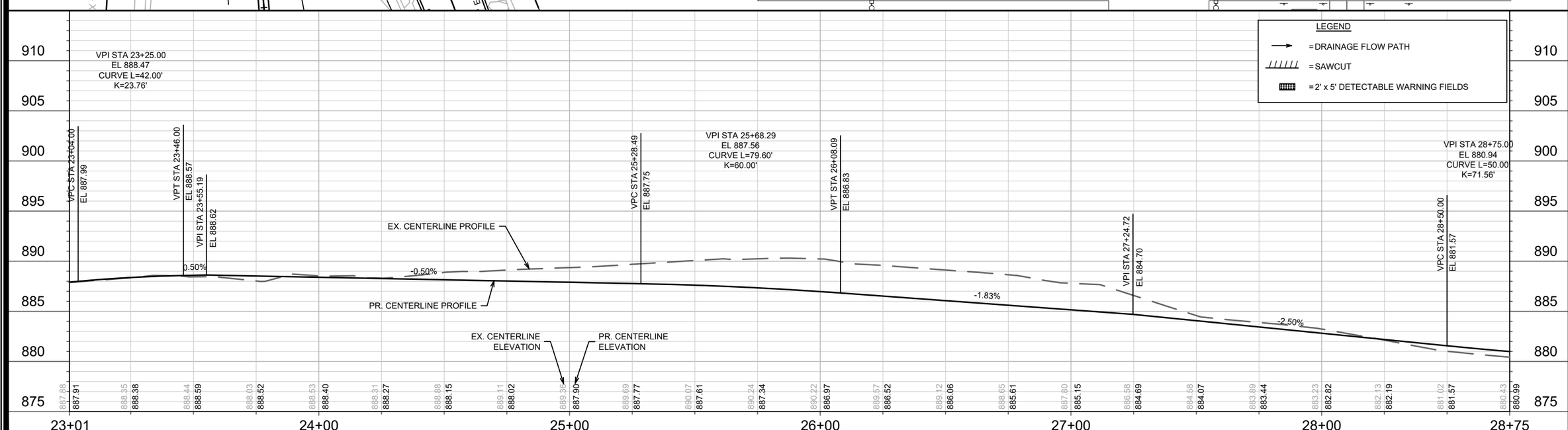

MARK	REVISION	DATE	BY
---	---	---	---
---	---	---	---
---	---	---	---
---	---	---	---
---	---	---	---
---	---	---	---

Designed By: IO | Date: 10/23/2024 11:27 AM | Scale: 1" = 40'

14950

P-3

14950

MADISON, WI

9481

CONTRACT NO:

STREET PLAN & PROFILE - LUDS LANE

LUDS LANE AND FEMRITE DRIVE CSM

M:\DESIGN\Projects\14950\CAD\Streets\14950EN-PnP.dwg

CITY OF MADISON WISCONSIN

14950

P-3

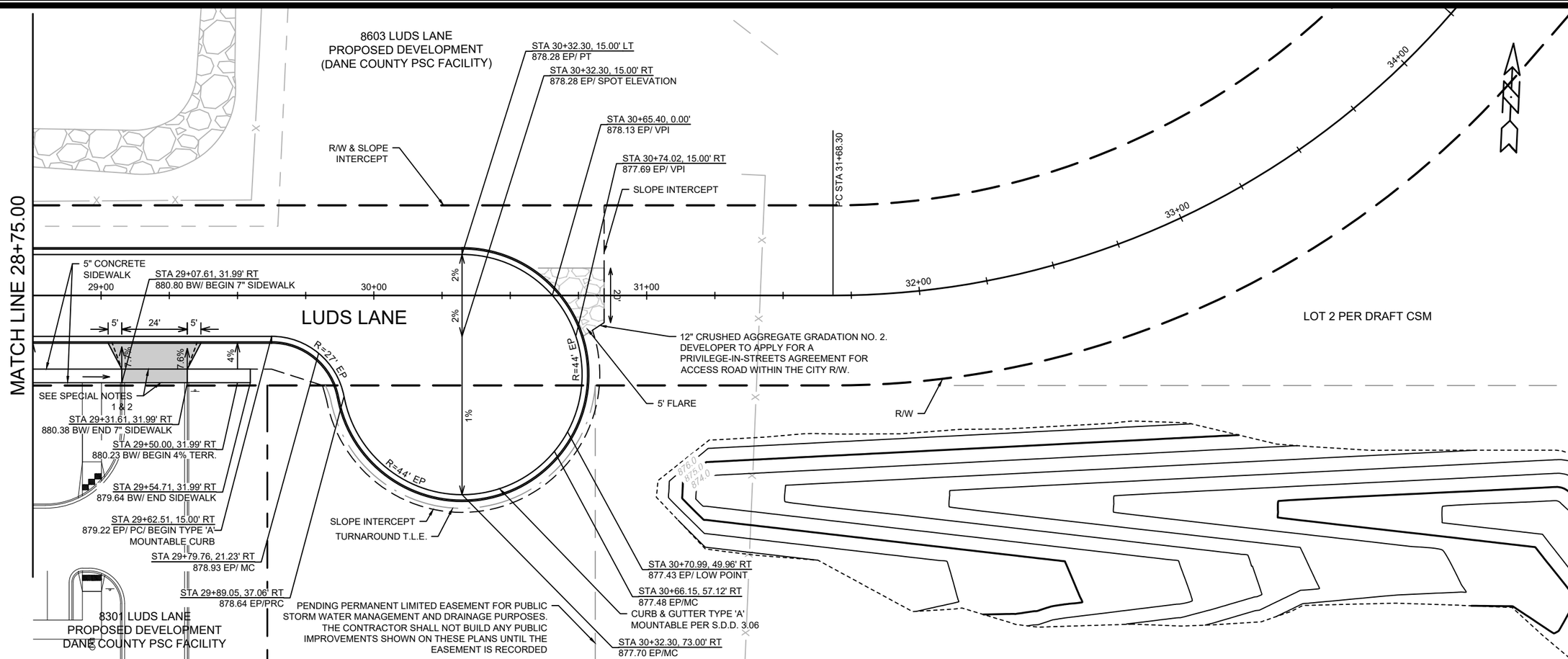

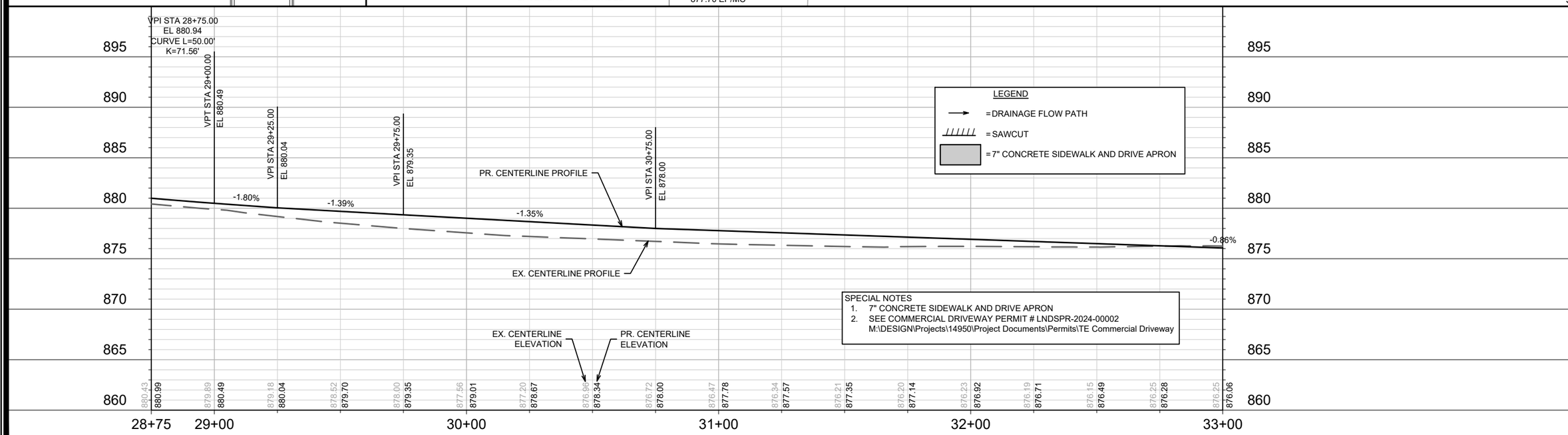

MARK	REVISION	DATE	BY
---	---	---	---
---	---	---	---
---	---	---	---
---	---	---	---
---	---	---	---
---	---	---	---

Designed By: IO | Date: 10/23/2024 11:27 AM | Scale: 1" = 40'

14950 | P-4

14950

MADISON, WI

9481

CONTRACT NO:

STREET PLAN & PROFILE - LUDS LANE

LUDS LANE AND FEMRITE DRIVE CSM

M:\DESIGN\Projects\14950\CAD\Streets\14950EN-PnP.dwg

CITY OF MADISON WISCONSIN

14950

P-4

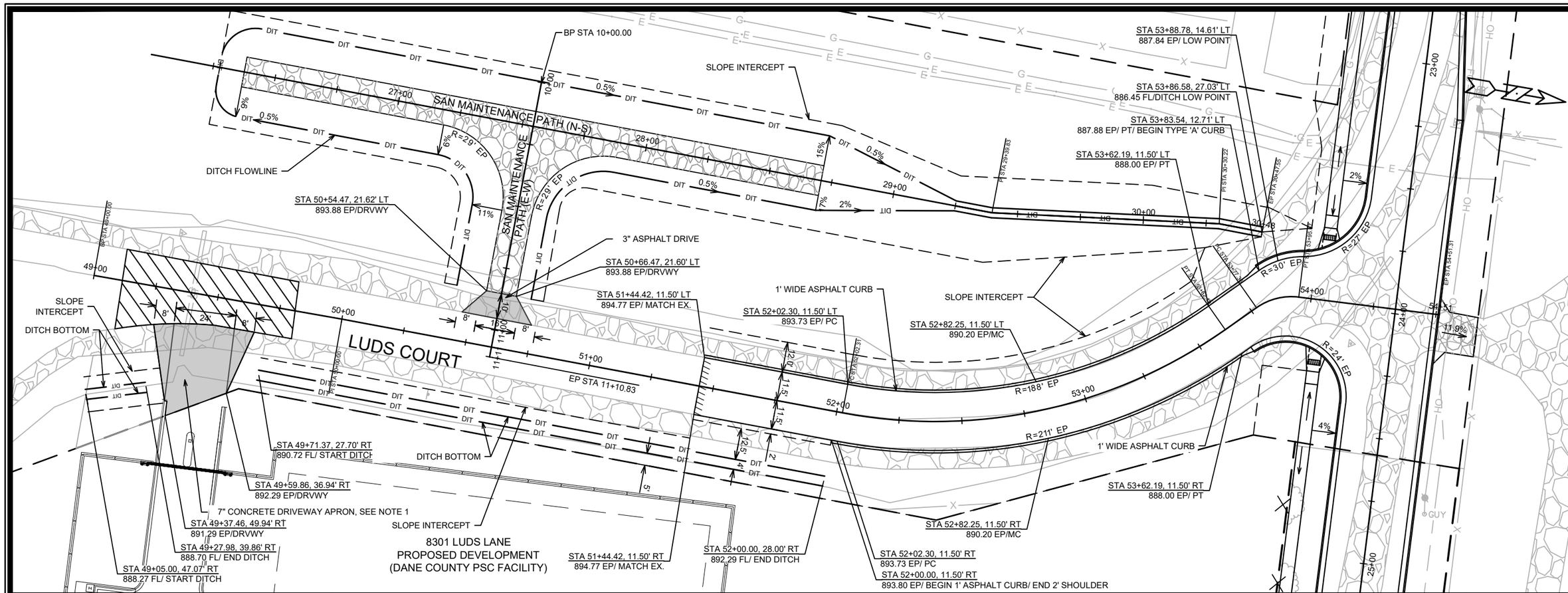

LEGEND

- = GRAVEL ACCESS ROAD.
- = DRAINAGE FLOW PATH.
- = 2" MILL & OVERLAY (TYPE 4 MT 58-28 S). LIMITS SHOWN ARE APPROXIMATE AND CAN BE MODIFIED BY THE CITY CONSTRUCTION ENGINEER.
- = PAVEMENT SAWCUT

SPECIAL NOTES
1. SEE COMMERCIAL DRIVEWAY PERMIT # LNDSPR-2024-00002
M:\DESIGN\Projects\14950\Project Documents\Permits\TE Commercial Driveway

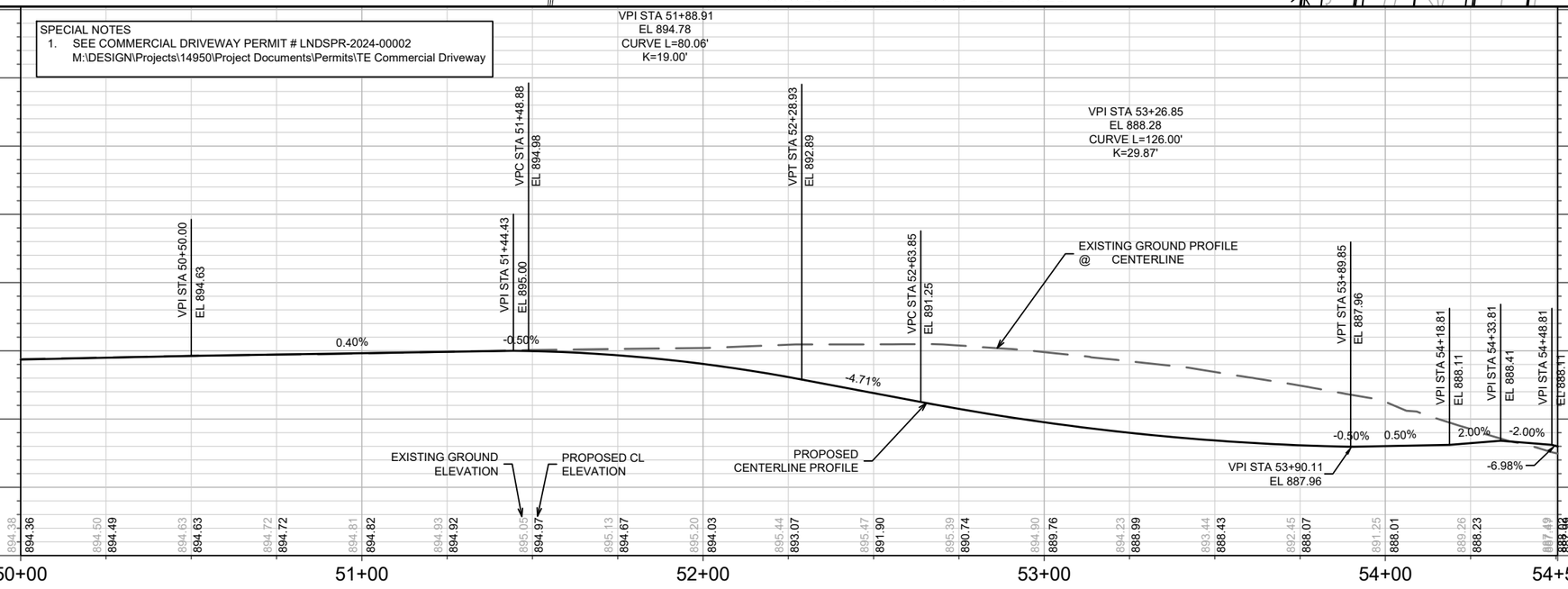

MARK	REVISION	DATE	BY
---	---	---	---

Designed By: IO | Date: 10/23/2024 11:27 AM | Scale: 1" = 40'

14950

MADISON, WI

9481

CONTRACT NO:

STREET PLAN & PROFILE - LUDS COURT

LUDS LANE AND FEMRITE DRIVE CSM

M:\DESIGN\Projects\14950\CAD\Streets\14950EN-PnP.dwg

14950

P-5

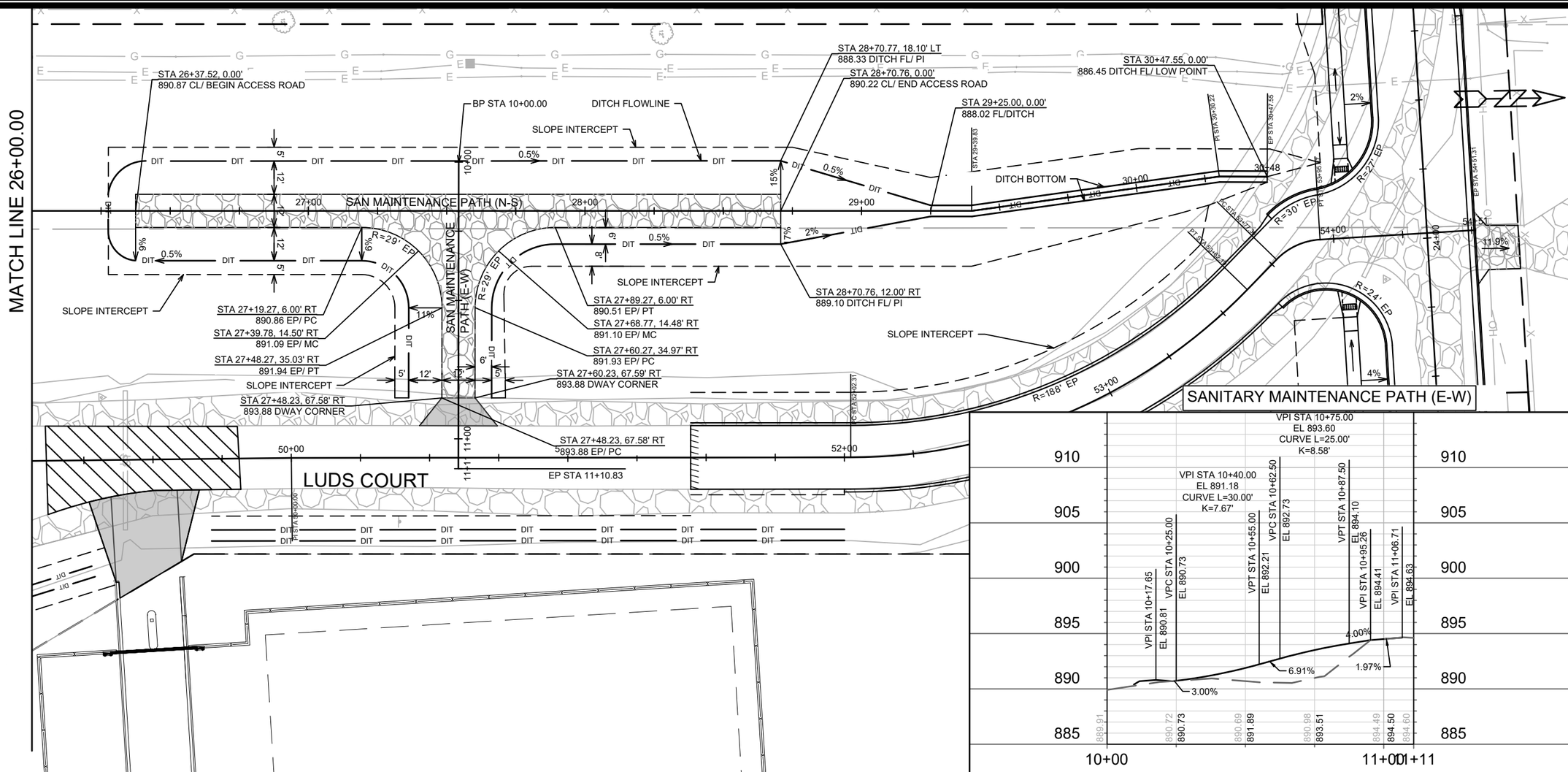

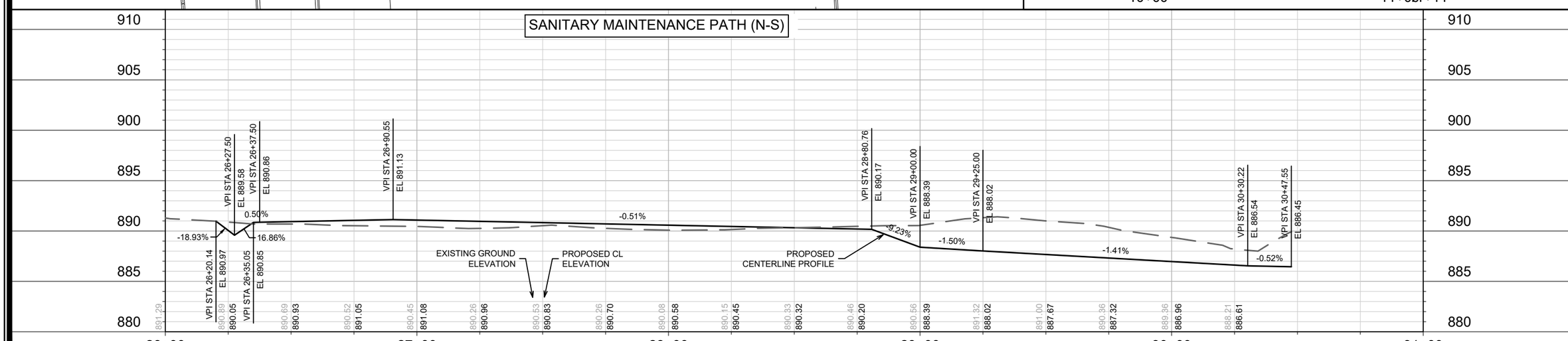

MARK	REVISION	DATE	BY
---	---	---	---
---	---	---	---
---	---	---	---
---	---	---	---
---	---	---	---

Designed By: IO | Date: 10/23/2024 11:28 AM | Scale: 1" = 40'

14950

MADISON, WI

9481

CONTRACT NO:

STREET PLAN & PROFILE - SANITARY MAINTENANCE PATH

LUDS LANE AND FEMRITE DRIVE CSM

M:\DESIGN\Projects\14950\CAD\Streets\14950EN-PnP.dwg

14950

P-6

LEGEND

= 3.5" MILL & OVERLAY, 2 LIFTS OF TYPE 4 MT 58-28 S. LIMITS SHOWN ARE APPROXIMATE AND CAN BE MODIFIED BY THE CITY CONSTRUCTION ENGINEER WITH APPROVAL FROM DANE COUNTY HIGHWAY.

REVISION #3

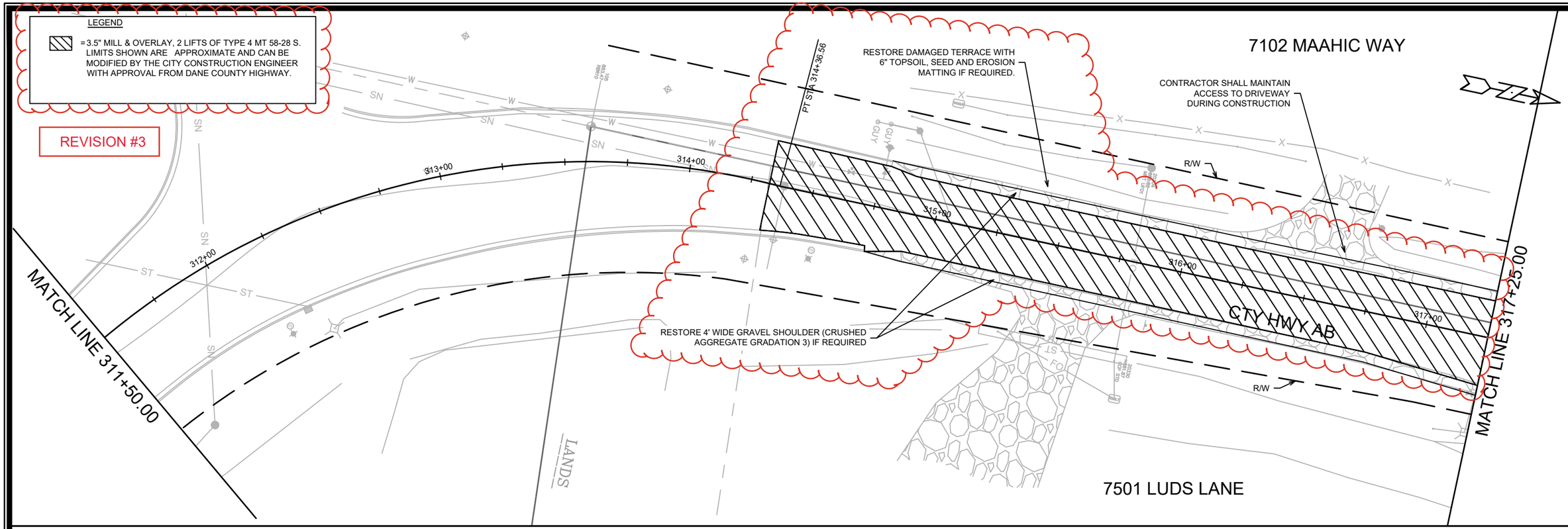

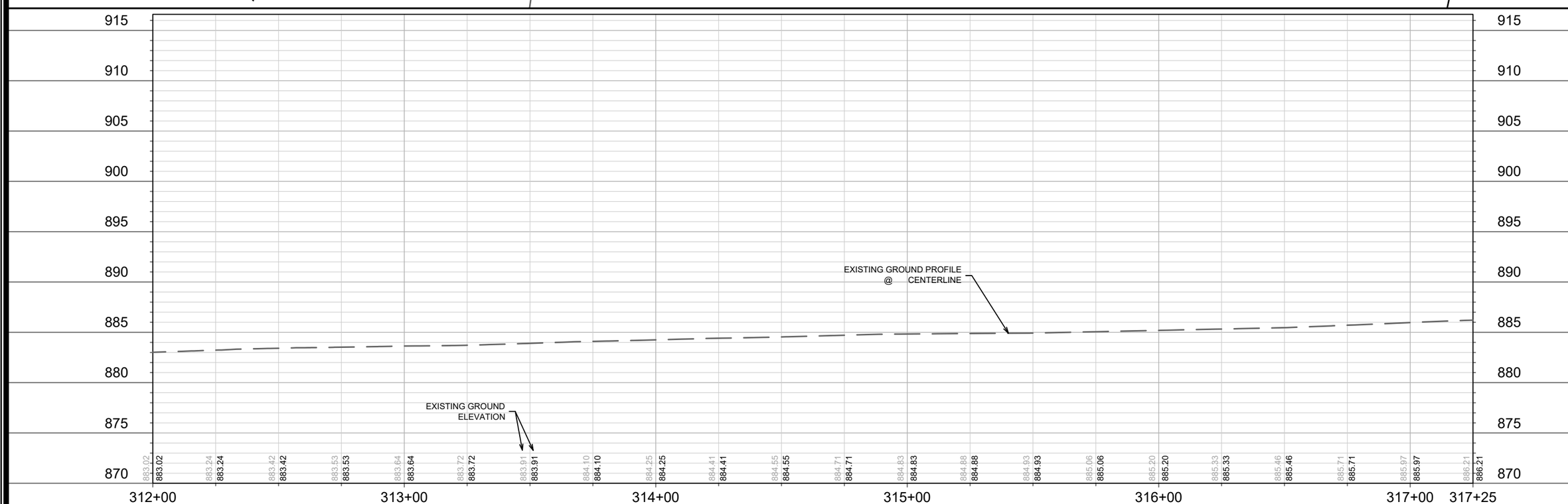

MARK	REVISION	DATE	BY
---	---	---	---
---	---	---	---
---	---	---	---
---	---	---	---

Designed By: IO | Date: 6/18/2025 11:38 AM | Scale: 1" = 40'

14950 | P-7

14950

MADISON, WI

9481

CONTRACT NO:

STREET PLAN & PROFILE - COUNTY HIGHWAY AB

LUDS LANE AND FEMRITE DRIVE CSM

M:\DESIGN\Projects\14950\CAD\Streets\14950EN-PnP.dwg

14950

P-7

REVISION #3

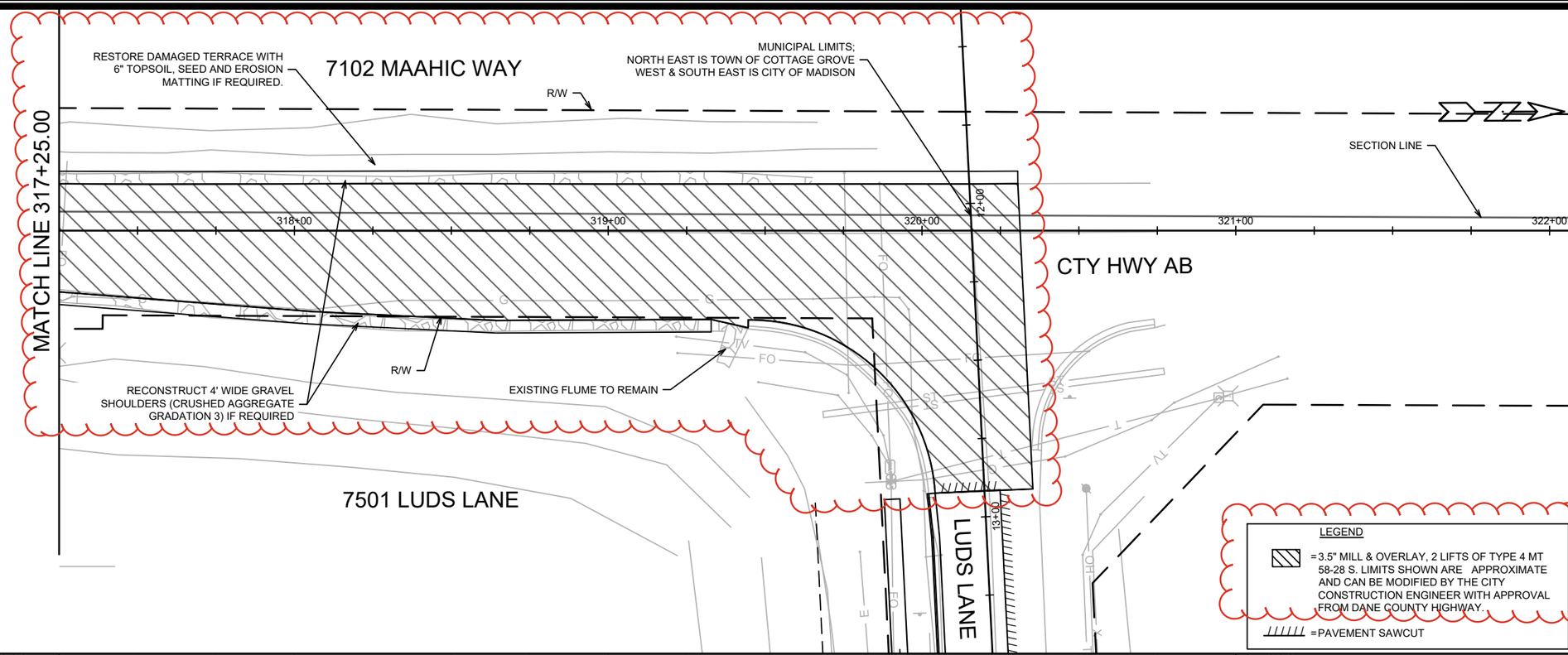

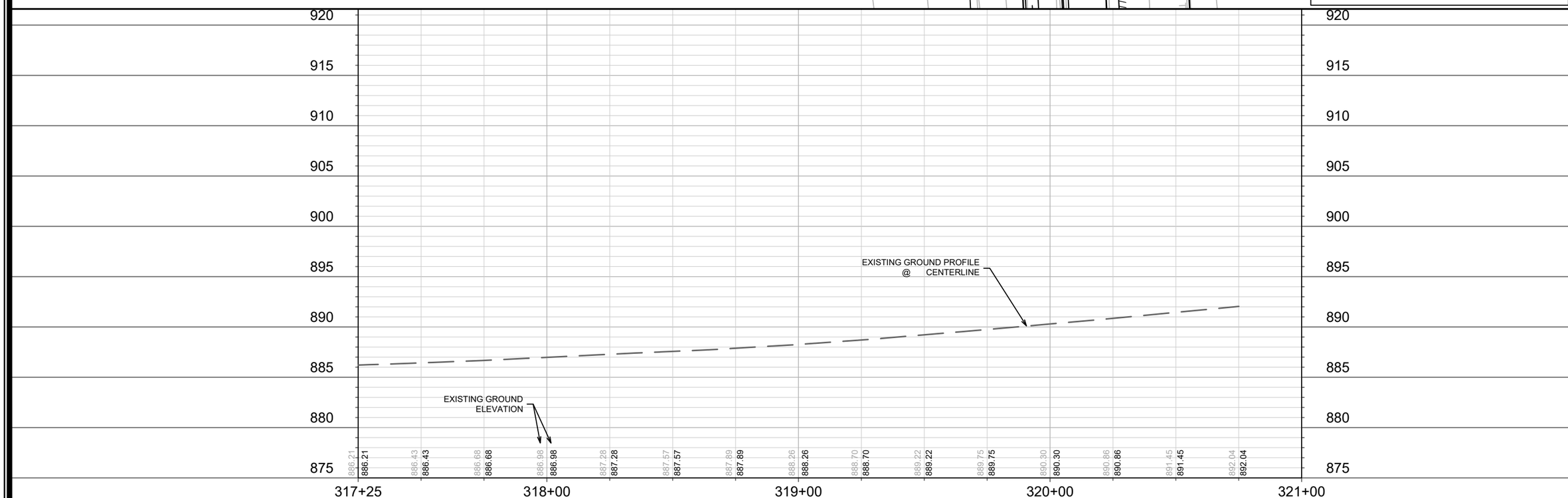

MARK	REVISION	DATE	BY
---	---	---	---
---	---	---	---
---	---	---	---
---	---	---	---

Designed By: IO | Date: 6/18/2025 11:39 AM | Scale: 1" = 40'

14950 | P-8

14950

MADISON, WI

9481

CONTRACT NO:

STREET PLAN & PROFILE - COUNTY HIGHWAY AB

LUDS LANE AND FEMRITE DRIVE CSM

M:\DESIGN\Projects\14950\CAD\Streets\14950EN-PnP.dwg

14950

P-8

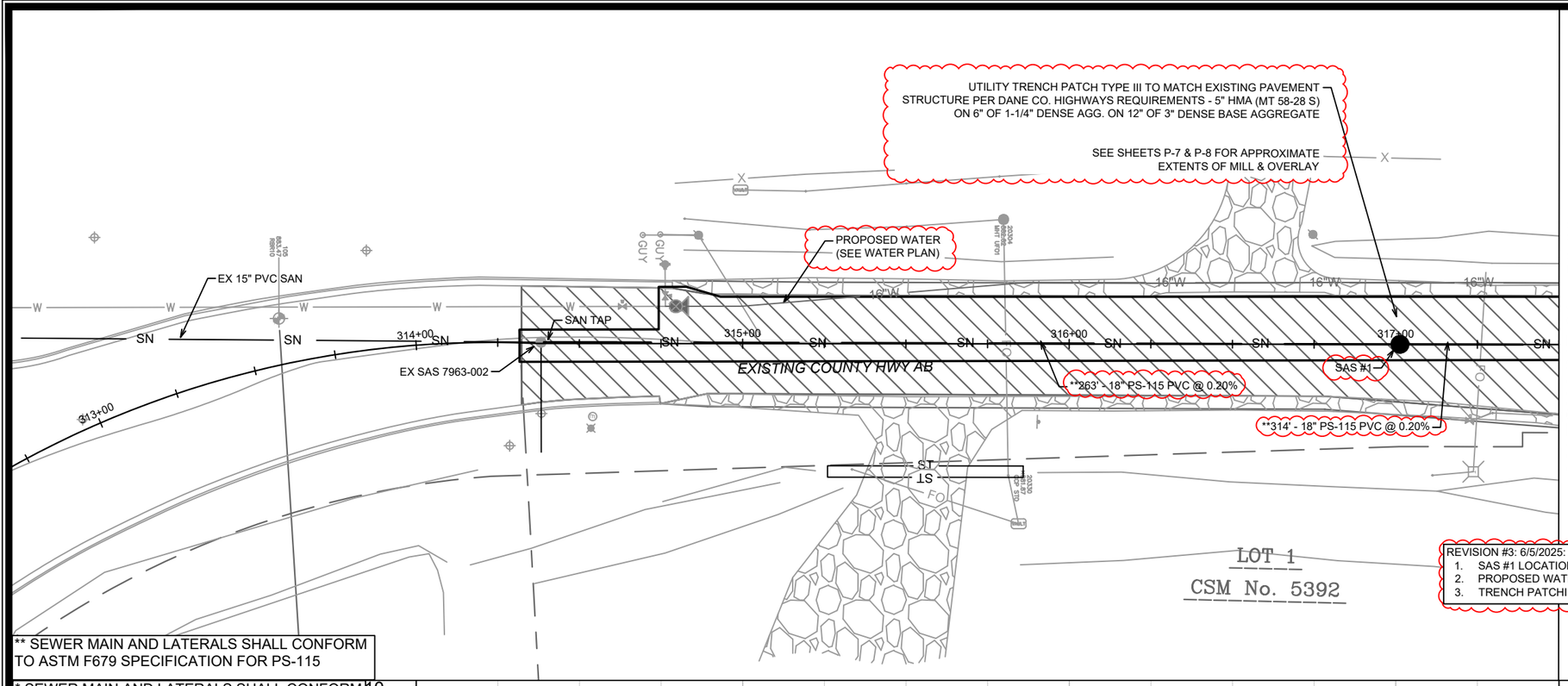

REVISION #3: 6/5/2025:
1. SAS #1 LOCATION MODIFIED TO AVOID FIBER OPTIC
2. PROPOSED WATER RELOCATED (SEE WATER PLAN)
3. TRENCH PATCHING NOTE REVISED

** SEWER MAIN AND LATERALS SHALL CONFORM TO ASTM F679 SPECIFICATION FOR PS-115

* SEWER MAIN AND LATERALS SHALL CONFORM TO ASTM D3034 SPECIFICATION FOR SDR-26

SAS#1 - SAS#8: INSTALL EXTERNAL SAS WRAP IN ACCORDANCE WITH SDD 5.7.2

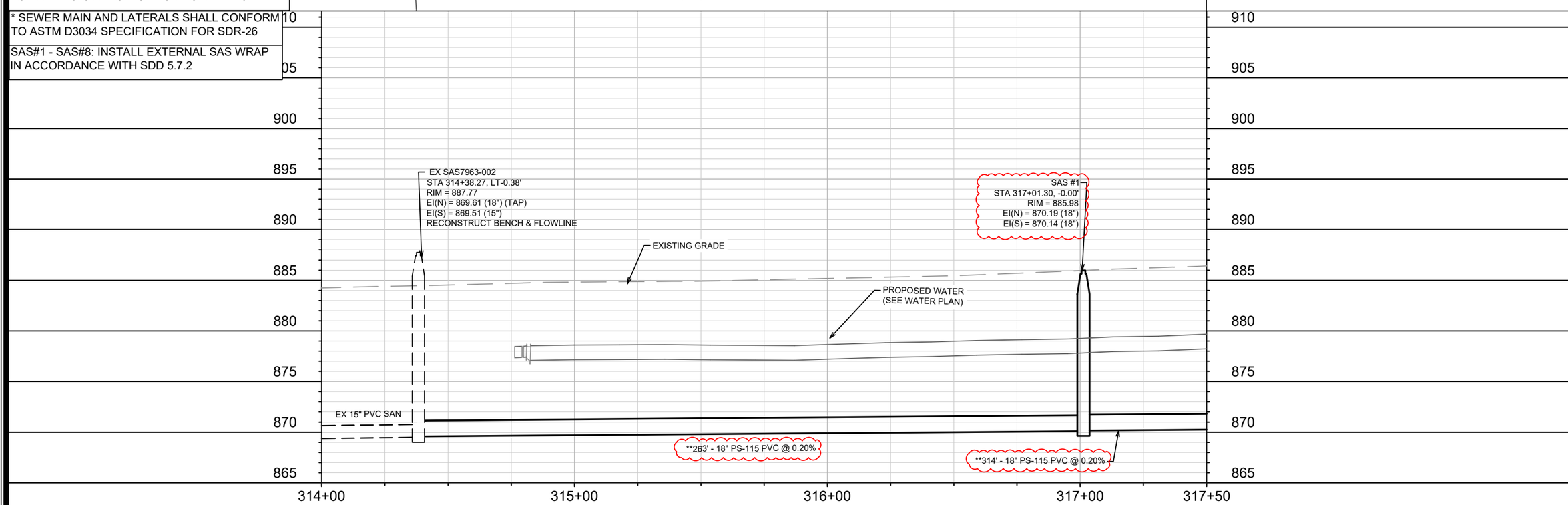

MARK	REVISION	DATE	BY
3	SAS #1 RELOCATED	6/5/25	EAC

Designed By: IO
Date: 6/12/2025 2:32 PM
Scale: 1" = 40'

14950

U-1

SEWER PLAN & PROFILE - EXISTNG COUNTY HWY AB

LUDS LN & FEMRITE DR CSM

MADISON, WI

CONTRACT NO: 9481

M:\DESIGN\Projects\14950\CAD\Sewers\14950SWR-PipeNetwork.dwg

14950

U-1

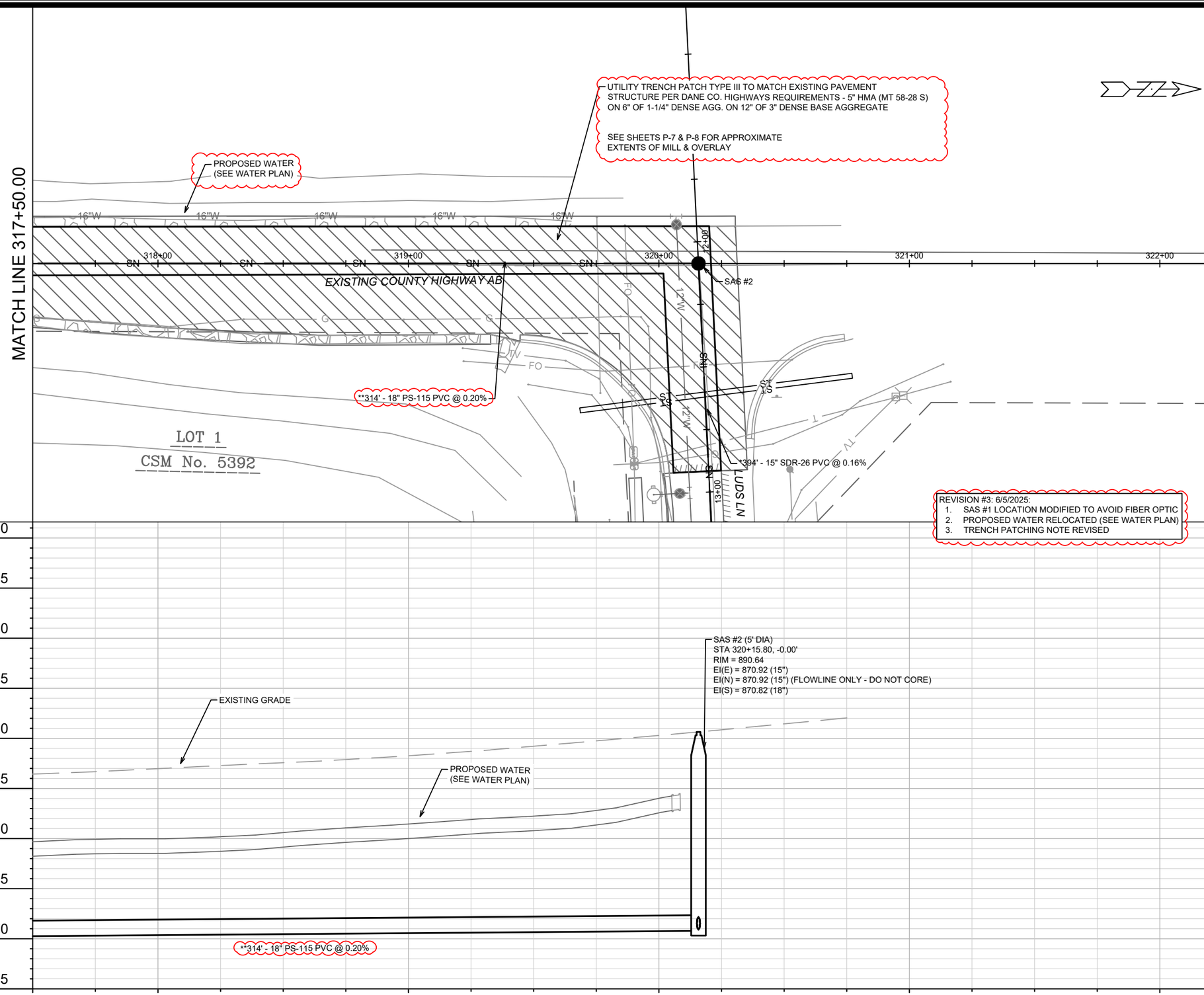

MARK	REVISION	DATE	BY
3	SAS #1 RELOCATED	6/5/25	EAC

Designed By: IO
Date: 6/12/2025 2:32 PM
Scale: 1" = 40'

14950

SEWER PLAN & PROFILE - EXISTNG COUNTY HWY AB

LUDS LN & FEMRITE DR CSM

MADISON, WI

CONTRACT NO: 9481

M:\DESIGN\Projects\14950\CAD\Sewers\14950SWR-PipeNetwork.dwg

14950

U-2

UTILITY TRENCH PATCH TYPE III TO MATCH EXISTING PAVEMENT STRUCTURE PER DANE CO. HIGHWAYS REQUIREMENTS - 5" HMA (MT 58-28 S) ON 6" OF 1-1/4" DENSE AGG. ON 12" OF 3" DENSE BASE AGGREGATE

SEE SHEETS P-7 & P-8 FOR APPROXIMATE EXTENTS OF MILL & OVERLAY

LOT 1
CSM No. 11164

TOWN OF COTTAGE GROVE

EXISTING COUNTY HWY AB

LUDS LN

CITY OF MADISON

*394' - 15" SDR-26 PVC @ 0.16%

SAS #2

SAS #3

*394' - 15" SDR-26 PVC @ 0.16%

INSTALL TWO 6" PVC LATERAL STUBS, EACH @ 2.00% MIN

PROPOSED WATER (SEE WATER PLAN)

S-9

ULO1-G

P-8

RS-7

RP-7

S-20

S-21

P-20

INSTALL ELECTRONIC MARKER BALL ABOVE LATERAL AND CAP AT PROPERTY LINE

**314' - 18" PS-115 PVC @ 0.20%

LOT 1
CSM No. 5392

LOT 2
CSM No. 5392

MATCH LINE 17+00.00

** SEWER MAIN AND LATERALS SHALL CONFORM TO ASTM F679 SPECIFICATION FOR PS-115

* SEWER MAIN AND LATERALS SHALL CONFORM TO ASTM D3034 SPECIFICATION FOR SDR-26

NOTE: THE CENTERLINE OF LUDS LN BETWEEN APPROXIMATELY STA 12+50 - 22+75 IS THE BOUNDARY BETWEEN THE TOWN OF COTTAGE GROVE AND THE CITY OF MADISON.

SAS#1 - SAS#8: INSTALL EXTERNAL SAS WRAP IN ACCORDANCE WITH SDD 5.7.2

REVISION #3: 6/5/2025:
1. SAS #1 LOCATION MODIFIED TO AVOID FIBER OPTIC
2. PROPOSED WATER RELOCATED (SEE WATER PLAN)
3. TRENCH PATCHING NOTE REVISED

SAS #2 (5' DIA)
STA 320+15.80, -0.00'
RIM = 890.64
EI(E) = 870.92 (15")
EI(N) = 870.92 (15") (FLOWLINE ONLY - DO NOT CORE)
EI(S) = 870.82 (18")

PROPOSED GRADE

EXISTING GRADE

SAS #3
STA 16+02.67, -0.00'
RIM = 887.57
EI(E) = 871.60 (15")
EI(W) = 871.55 (15")

PROPOSED WATER (SEE WATER PLAN)

S-9

P-8

*394' - 15" SDR-26 PVC @ 0.16%

*394' - 15" SDR-26 PVC @ 0.16%

910 905 900 895 890 885 880 875 870 865

11+75 12+00 13+00 14+00 15+00 16+00 17+00

MARK	REVISION	DATE	BY
3	SAS #1 RELOCATED	6/5/25	EAC

Designed By: IO | Date: 6/12/2025 2:32 PM | Scale: 1" = 40'

14950 | U-3

14950

MADISON, WI

9481

CONTRACT NO:

SEWER PLAN & PROFILE - LUDS LN

LUDS LN & FEMRITE DR CSM

M:\DESIGN\Projects\14950\CAD\Sewers\14950SWR-PipeNetwork.dwg

14950

U-3

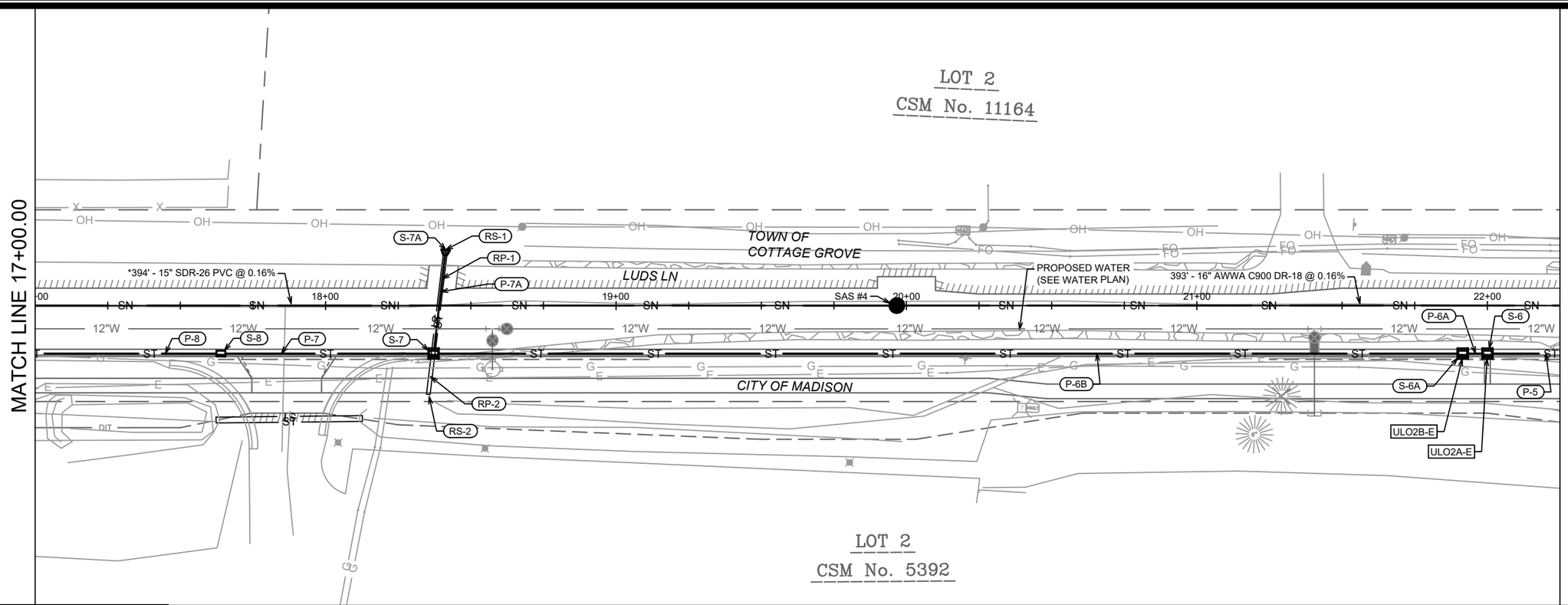

* SEWER MAIN AND LATERALS SHALL CONFORM TO ASTM D3034 SPECIFICATION FOR SDR-26

NOTE: THE CENTERLINE OF LUDS LN BETWEEN APPROXIMATELY STA 12+50 - 22+75 IS THE BOUNDARY BETWEEN THE TOWN OF COTTAGE GROVE AND THE CITY OF MADISON.

SAS#1 - SAS#8: INSTALL EXTERNAL SAS WRAP IN ACCORDANCE WITH SDD 5.7.2

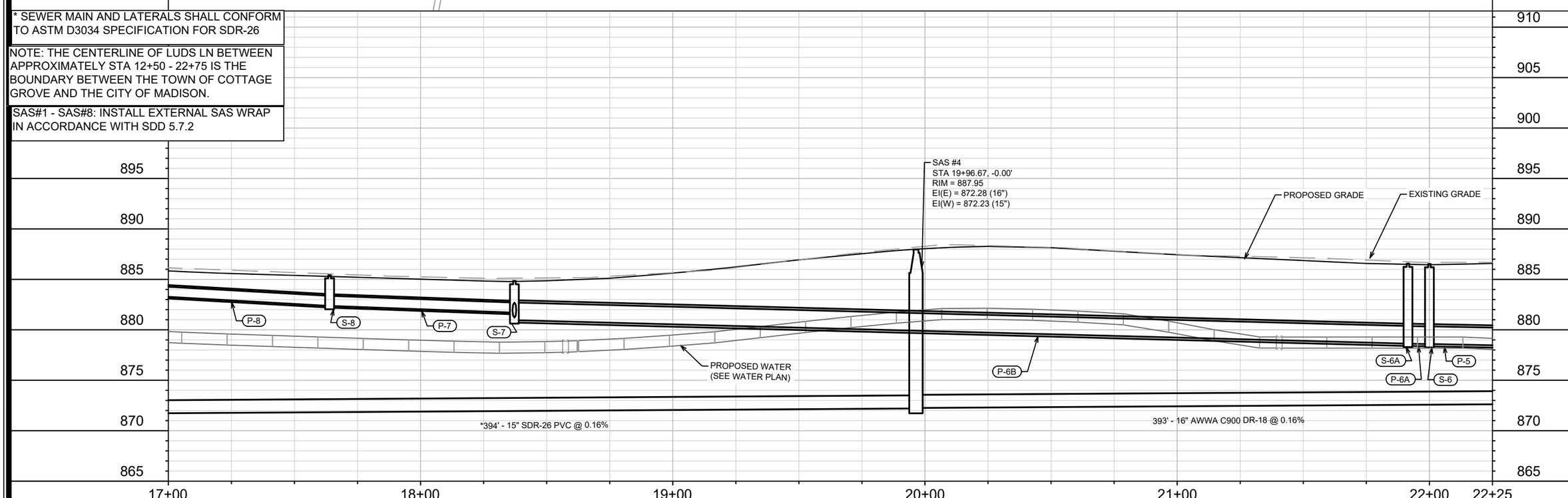

MARK	REVISION	DATE	BY
---	---	---	---
---	---	---	---
---	---	---	---
---	---	---	---

Designed By: IO | Date: 10/21/2024 10:47 AM | Scale: 1" = 40'

14950

MADISON, WI

9481

CONTRACT NO:

SEWER PLAN & PROFILE - LUDS LN

LUDS LN & FEMRITE DR CSM

M:\DESIGN\Projects\14950\CAD\Sewers\14950SWR-PipeNetwork.dwg

14950

U-4

U-4

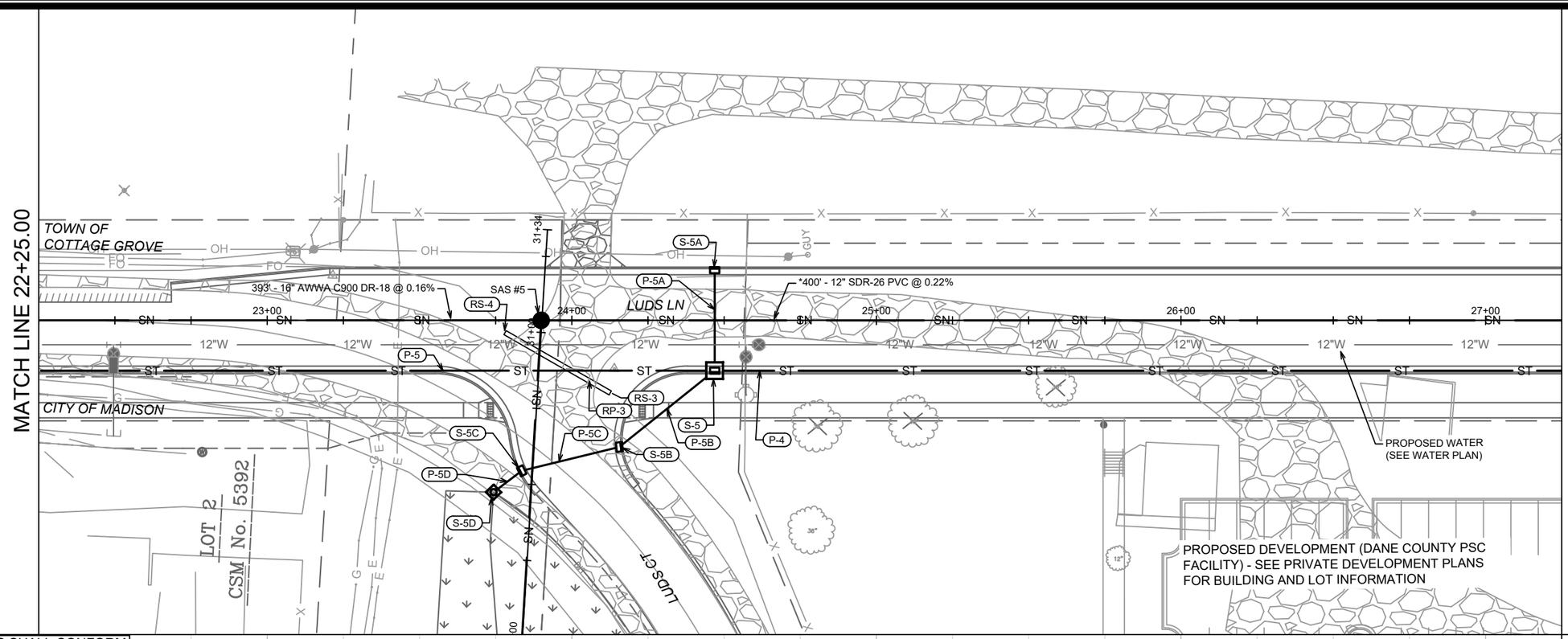

* SEWER MAIN AND LATERALS SHALL CONFORM TO ASTM D3034 SPECIFICATION FOR SDR-26

NOTE: THE CENTERLINE OF LUDS LN BETWEEN APPROXIMATELY STA 12+50 - 22+75 IS THE BOUNDARY BETWEEN THE TOWN OF COTTAGE GROVE AND THE CITY OF MADISON.

SAS#1 - SAS#8: INSTALL EXTERNAL SAS WRAP IN ACCORDANCE WITH SDD 5.7.2

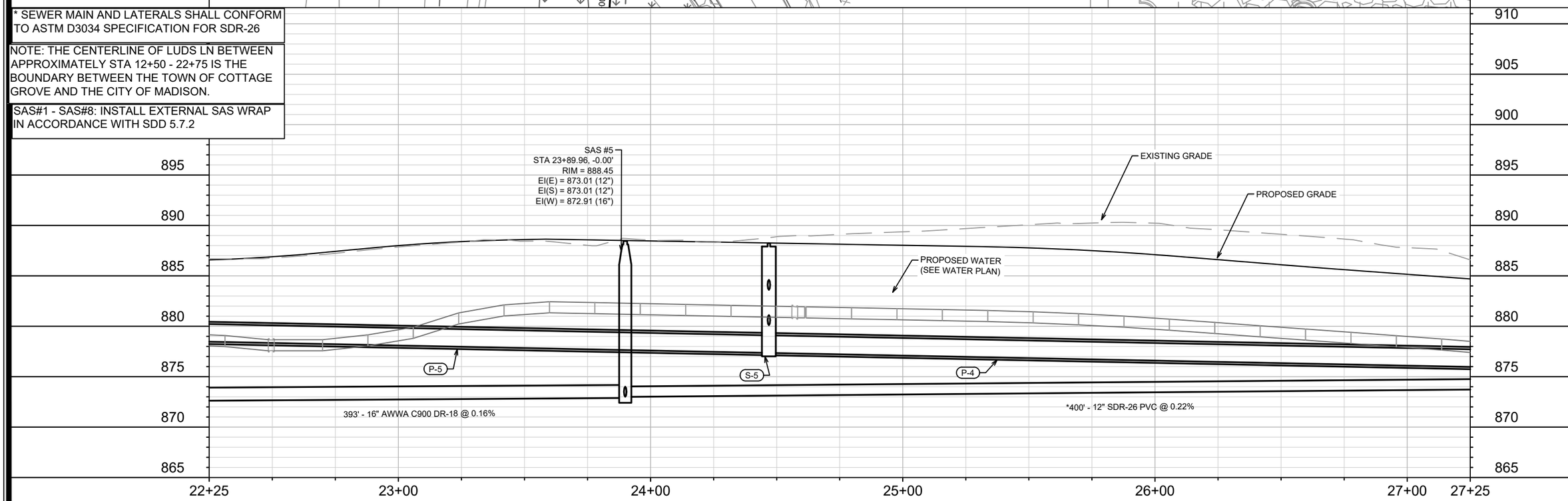

MARK	REVISION	DATE	BY
---	---	---	---
---	---	---	---
---	---	---	---
---	---	---	---

Designed By: IO | Date: 10/21/2024 10:51 AM | Scale: 1" = 40'

14950

U-5

14950

MADISON, WI

9481

CONTRACT NO:

SEWER PLAN & PROFILE - LUDS LN

LUDS LN & FEMRITE DR CSM

M:\DESIGN\Projects\14950\CAD\Sewers\14950SWR-PipeNetwork.dwg

CITY OF MADISON WISCONSIN

14950

U-5

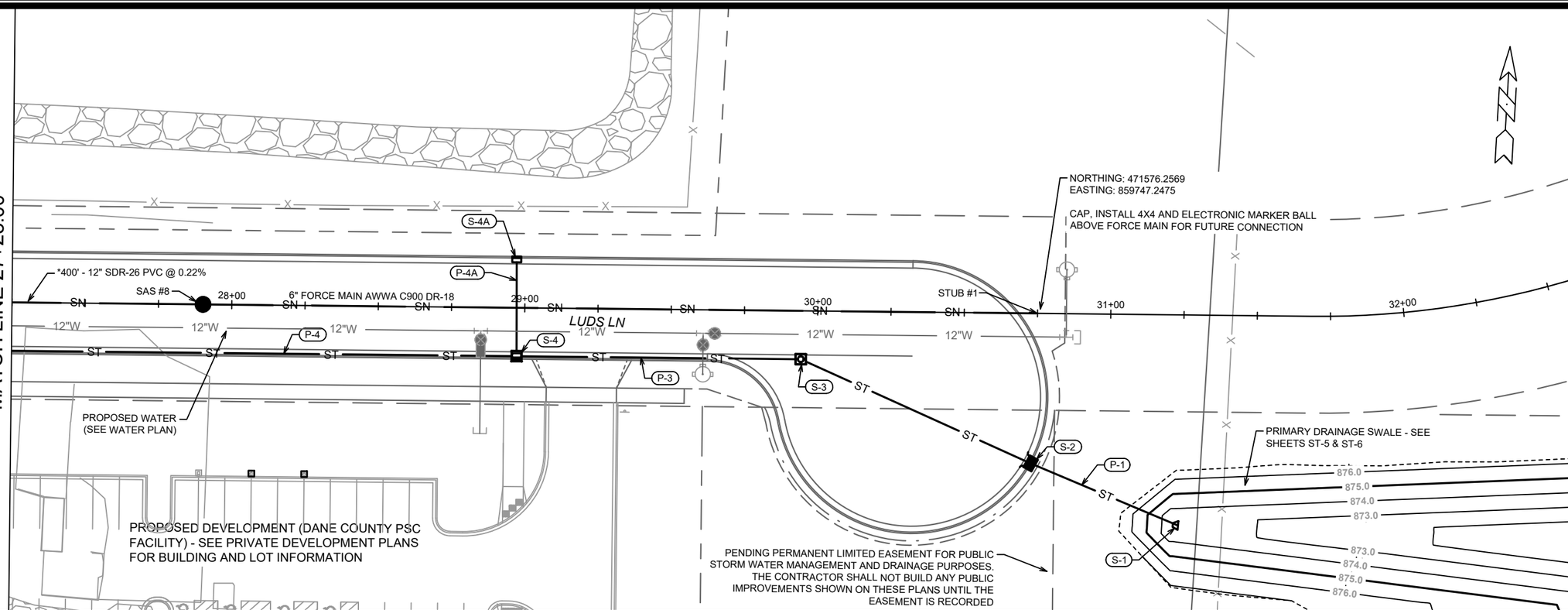

* SEWER MAIN AND LATERALS SHALL CONFORM TO ASTM D3034 SPECIFICATION FOR SDR-26

SAS#1 - SAS#8: INSTALL EXTERNAL SAS WRAP IN ACCORDANCE WITH SDD 5.7.2

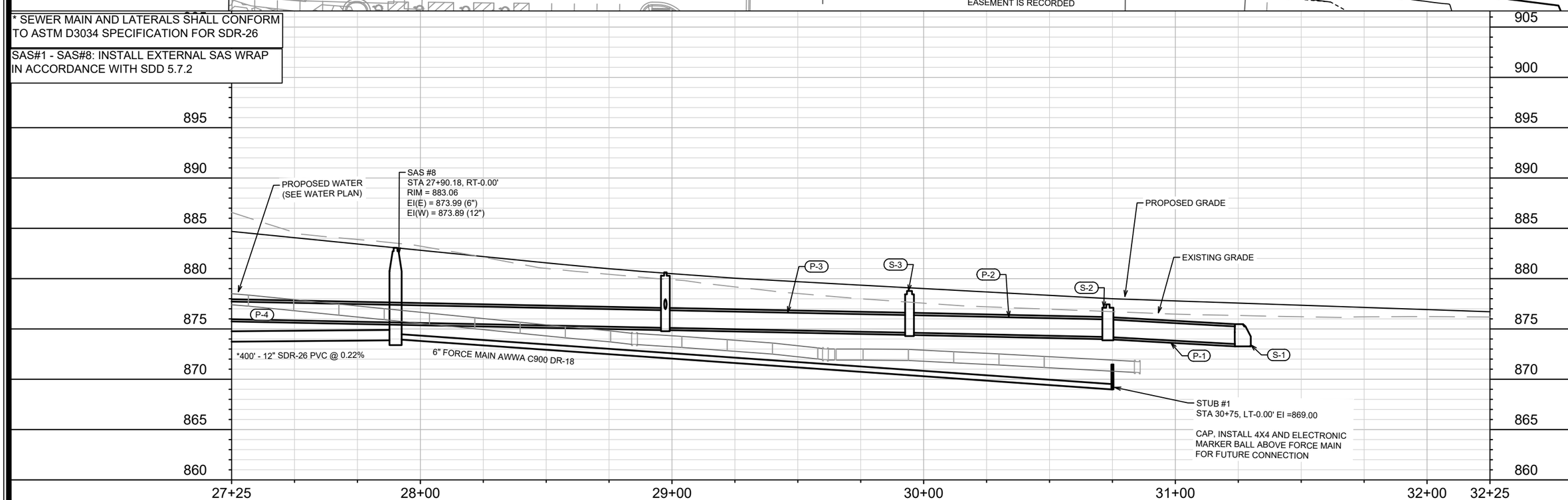

MARK	REVISION	DATE	BY
---	---	---	---
---	---	---	---
---	---	---	---
---	---	---	---

Designed By: IO | Date: 10/21/2024 10:47 AM | Scale: 1" = 40'

14950

MADISON, WI

9481

CONTRACT NO:

SEWER PLAN & PROFILE - LUDS LN

LUDS LN & FEMRITE DR CSM

M:\DESIGN\Projects\14950\CAD\Sewers\14950SWR-PipeNetwork.dwg

14950

U-6

SEWER ACCESS STRUCTURE MAINTENANCE ROAD

SAS #7

*233' - 12" SDR-26 PVC @ 0.22%

SAS #6

*233' - 12" SDR-26 PVC @ 0.22%

393' - 18" AWWA C900 DR-18 @ 0.16%

SAS #5

PROPOSED WATER (SEE WATER PLAN)

132' - 8" PVC LATERAL @ 0.52% (LENGTH TO PROPERTY LINE)

LUDS CT

LUDS LN

*400' - 12" SDR-26 PVC @ 0.22%

INSTALL ELEC MARKER BALL ABOVE LAT AT PROPERTY LINE (TYP.)

PROPOSED DEVELOPMENT (DANE COUNTY PSC FACILITY) - SEE PRIVATE DEVELOPMENT PLANS FOR BUILDING AND LOT INFORMATION

* SEWER MAIN AND LATERALS SHALL CONFORM TO ASTM D3034 SPECIFICATION FOR SDR-26

SAS#1 - SAS#8: INSTALL EXTERNAL SAS WRAP IN ACCORDANCE WITH SDD 5.7.2

REVISION #1: 12/2/2024:
1. S-31 & S-32 ADDITION
2. P-10 CHANGED TO HERCP
3. SANITARY MAINTENANCE PATH ALIGNMENT MODIFIED
4. REVISED GRADING NEAR SANITARY MAINTENANCE AREA

SAS #7
STA 26+37.52, -0.00'
RIM = 892.87
EI(E) = 874.20 (8") (LATERAL FOR PROPOSED DEVELOPMENT)
EI(N) = 874.10 (12")

SAS #6
STA 28+70.76, -0.00'
RIM = 892.22
EI(S) = 873.58 (12")
EI(N) = 873.53 (12")

PROPOSED GRADE

EXISTING GRADE

SAS #5
STA 23+89.96, -0.00'
RIM = 888.45
EI(E) = 873.01 (12")
EI(S) = 873.01 (12")
EI(W) = 872.91 (15")

*233' - 12" SDR-26 PVC @ 0.22%

*233' - 12" SDR-26 PVC @ 0.22%

910 905 900 895 890 885 880 875 870 865

26+25 27+00 28+00 29+00 30+00 31+00 31+50

MARK	REVISION	DATE	BY
1	S-31 & S-32 ADDITION	12/2/24	EAC

Designed By: IO
Date: 12/2/2024 2:21 PM
Scale: 1" = 40'

14950

U-7

14950

MADISON, WI

9481

CONTRACT NO:

SEWER PLAN & PROFILE - SANITARY MAINTENANCE PATH

LUDS LN & FEMRITE DR CSM

M:\DESIGN\Projects\14950\CAD\Sewers\14950SWR-PipeNetwork.dwg

CITY OF MADISON WISCONSIN

14950

U-7

SANITARY SEWER SCHEDULE

ϕ **REVISION 3 - 6/5/2025 EAC**

LUDS LN AND FEMRITE DR CSM	SHEET NO.
PROJECT NO. 14950	U-8
SANITARY SEWER SCHEDULE	
CITY OF MADISON	

U-8

PROPOSED SANITARY STRUCTURES

	SAS NO.	STATION	LOCATION (OFFSET)	TOP OF CASTING	E.I.	DEPTH (FT)	NOTES
	EXISTING COUNTY HIGHWAY AB						
ϕ	SAS #1	**317+01.30**	CL	**885.98**	**870.14**	**15.84**	[2]
	SAS #2	320+15.80	CL	890.64	870.82	19.82	[2]; [3]; 5' DIA.
	LUDS LN						
	SAS #3	16+02.67	CL	887.57	871.55	16.02	[2]
	SAS #4	19+96.67	CL	887.95	872.23	15.72	[2]
	SAS #5	23+89.96	CL	888.45	872.91	15.54	[2]
	SAS #8	27+90.18	CL	883.06	873.89	9.17	[2]
	STUB #1	30+75.00	CL	-	869.00	-	[4]
	SANITARY MAINTENANCE PATH						
	SAS #6	28+70.76	CL	892.22	873.53	18.69	[2]; [5]
	SAS #7	26+37.52	CL	892.87	874.10	18.77	[2]; [5]; [6]

PROPOSED SANITARY PIPES

	FROM (DNSTM)	TO (UPSTM)	DWNSTRM E.I.	UPSTRM E.I.	PLAN LGTH (FT)	SLOPE (%)	PVC TYPE	NOTES
	EXISTING COUNTY HIGHWAY AB							
ϕ	EX SAS 7963-002	SAS #1	869.61	**870.14**	**263**	0.20	18"	PS-115; [1]
ϕ	SAS #1	SAS #2	**870.19**	870.82	**314**	0.20	18"	PS-115
	LUDS LN							
	SAS #2	SAS #3	870.92	871.55	394	0.16	15"	SDR-26
	SAS #3	SAS #4	871.60	872.23	394	0.16	15"	SDR-26
	SAS #4	SAS #5	872.28	872.91	393	0.16	16"	AWWA C-900 DR-18; [7]
	SAS #5	SAS #8	873.01	873.89	400	0.22	12"	SDR-26
	SAS #8	STUB #1	873.99	869.00	285	-1.75	6"	AWWA C-900 DR-18 (FORCEMAIN)
	SANITARY MAINTENANCE PATH							
	SAS #5	SAS #6	873.01	873.53	233	0.22	12"	SDR-26
	SAS #6	SAS #7	873.58	874.10	233	0.22	12"	SDR-26

SPECIFIC NOTES

[1] 18" TAP EX SAS7963-002 - EI(N) = 869.61, RECONSTRUCT BENCH & FLOWLINE OF EX SAS 7963-002
[2] INSTALL EXTERNAL SAS WRAP IN ACCORDANCE WITH SDD 5.7.2
[3] 5' DIA. SAS (FUTURE INSIDE DROP CONNECTION TO NORTH)
[4] CAP FORCE MAIN STUB, INSTALL 4X4 AND ELECTRONIC MARKER BALL ABOVE FORCE MAIN FOR FUTURE CONNECTION, EI =869.00
[5] TOP OF CASTING SET 2' ABOVE EXISTING GRADE AT STRUCTURE LOCATION
[6] CONNECT 8" PVC LATERAL FROM PROPOSED DEVELOPMENT, EI(E) = 874.20
[7] SEWER MAIN LESS THAN 50' FROM PRIVATE POTABLE WATER WELL FOR DANE COUNTY FACILITIES (WELL TO BE ABANDONED IN FUTURE). C900 PIPE TO BE INSTALLED.

STORM SEWER SCHEDULE

● REVISION 1 - 12/2/2024 EAC

LUDS LN AND FEMRITE DR CSM	SHEET NO.
PROJECT NO. 14950	U-9
STORM SEWER SCHEDULE	
CITY OF MADISON	

U-9

PROPOSED STORM STRUCTURES

STRUC. NO.	STATION	LOCATION (OFFSET)	TYPE	TOP OF CASTING	E.I.	DEPTH	NOTES
LUDS LN							
S-1	31+23.69	RT-71.81	21" AE W/ GATE	-	873.50	-	[1]
S-2	30+73.19	RT-51.17	TERRACE INLET TYPE III	877.44	874.20	3.24	[6]; LP; FP
S-3	29+94.36	RT-16.50	3'X3' SAS	878.78	874.63	4.15	W/R-1550-0054
S-4	28+97.38	RT-16.51	3'X3' SAS	880.62	875.11	5.51	W/R-3067-7004-V
S-4A	28+97.09	LT-16.50	H-INLET	880.63	877.13	3.50	W/R-3067-7004-V
S-5	24+46.91	RT-16.51	5'X5' SAS	888.24	877.36	10.88	W/R-3067-7004-V
S-5A	24+46.91	LT-16.49	H-INLET	888.24	883.77	4.47	W/R-3067-7004-V
S-6	22+00.00	RT-16.51	3'X3' SAS	886.53	878.59	7.94	LP; W/R-3067-7004-VB
S-6A	21+91.50	RT-16.51	3'X3' SAS	886.57	878.63	7.94	W/R-3067-7004-VB
S-7	18+37.20	RT-16.51	3'X3' SAS	884.85	880.95	3.90	[5]; LP; FP; W/R-3067-7004-VB
S-7A	18+41.34	LT-19.19	18" AE W/ GATE	-	881.43	-	[2]; [5]
S-8	17+63.93	RT-16.50	H-INLET	885.44	882.37	3.07	W/R-3067-7004-V
S-9	15+54.09	RT-16.50	H-INLET	888.32	885.32	3.00	W/R-3067-7004-V
S-20	16+72.87	RT-41.08	3'X3' SAS	884.49	880.46	4.03	[7]; FP; W/R-1550-0054
S-21	16+97.91	RT-42.00	24" AE W/ GATE	-	881.87	-	[8]
SANITARY MAINTENANCE PATH							
● S-5B	**30+65.05**	**RT-40.25**	H-INLET	**888.08**	881.25	**6.83**	LP; W/R-3067-7004-VB
● S-5C	**30+55.15**	**RT-8.76**	H-INLET	888.21	882.18	6.03	LP; W/R-3067-7004-VB
● S-5D	**30+47.55**	**CL**	3'X3' SAS	**886.52**	882.52	**4.00**	[3]; LP; R-2560-E
● S-10	26+22.23	RT-130.30	**14"X23" AE W/ GATE**	-	888.69	-	[4];
● S-11	26+65.48	RT-117.63	**14"X23" AE W/ GATE**	-	890.72	-	[4]; LP
● **S-31**	**26+20.35**	**RT-128.42**	**18" AE W/ GATE**	**-**	**888.69**	**-**	**[9]**
● **S-32**	**26+33.76**	**RT-64.98**	**18" AE W/ GATE**	**-**	**889.34**	**-**	**[10]**

PROPOSED STORM PIPES

PIPE NO.	FROM (DNSTM)	TO (UPSTM)	DISCH. E.I.	INLET E.I.	PLAN (PAY) LGTH (FT)	PIPE LGTH (FT)	SLOPE (%)	PIPE SIZE	TYPE	NOTES
LUDS LN										
P-1	S-1	S-2	873.50	874.20	53	51	1.37%	21"	RCP	
P-2	S-2	S-3	874.20	874.63	88	85	0.51%	21"	RCP	
P-3	S-3	S-4	874.63	875.11	97	94	0.51%	21"	RCP	
P-4	S-4	S-5	875.11	877.36	450	446	0.50%	21"	RCP	
P-4A	S-4	S-4A	876.96	877.13	33	31	0.55%	12"	RCP	NCM
P-5	S-5	S-6	877.36	878.59	247	243	0.51%	21"	RCP	
P-5A	S-5	S-5A	883.61	883.77	33	29	0.55%	12"	RCP	NCM
P-6A	S-6	S-6A	878.59	878.63	9	6	0.67%	21"	RCP	
P-6B	S-6A	S-7	878.63	880.95	354	351	0.66%	21"	RCP	
P-7	S-7	S-8	881.70	882.37	73	70	0.96%	12"	RCP	
P-7A	S-7	S-7A	881.20	881.43	36	35	0.66%	18"	RCP	
P-8	S-8	S-9	882.37	885.32	210	207	1.43%	12"	RCP	
P-20	S-20	S-21	880.46	881.87	25	24	5.87%	24"	TYPE II	
SANITARY MAINTENANCE PATH										
P-5B	S-5	S-5B	880.11	881.25	40	36	3.17%	12"	RCP	NCM
P-5C	S-5B	S-5C	881.25	882.18	33	31	3.00%	12"	RCP	
P-5D	S-5C	S-5D	882.18	882.52	12	9	3.78%	12"	RCP	
● P-10	S-10	S-11	888.69	890.72	45	45	4.51%	**14"X23"**	**HERCP**	
● **P-31**	**S-31**	**S-32**	**888.69**	**889.34**	**65**	**65**	**1.00%**	**18"**	**RCP**	

STORM STRUCTURE REMOVALS & ABANDONMENTS

STRUC. NO.	ID NO.	STATION	LOCATION (OFFSET)	TYPE	DEPTH (FT)	NOTES
LUDS LN						
RS-1	UNMARKED END #1	18+41.34	LT-19.19	15" CMP END	-	
RS-2	UNMARKED END #7	18+35.35	RT-30.57	15" CMP END		
RS-3	UNMARKED END #2	24+12.62	RT-23.84	18" CPP END	-	
RS-4	UNMARKED END #3	23+78.08	RT-4.02	18" CPP END	-	
RS-7	UNMARKED END #6	16+94.66	RT-36.83	24" CPP END	-	
SANITARY MAINTENANCE PATH						
RS-5	UNMARKED END #4	26+33.76	RT-64.98	18" CPP END		
RS-6	UNMARKED END #5	26+33.82	RT-115.29	18" CPP END		

STORM PIPE REMOVALS & ABANDONMENTS

PIPE REMOVAL N	REMOVE FROM	REMOVE TO	LGTH (FT)	PAID (Y/N)	REM LGTH PAID (FT)	ABN LGTH (FT)	SLURRY (CY)	PIPE SIZE	PIPE TYPE	NOTES
LUDS LN										
RP-1	S-7	S-7A	36	N	-	-	-	15"	CMP	[5]
RP-2	RS-2	S-7	12	Y	-	-	-	15"	CMP	
RP-3	RS-3	RS-4	40	Y	-	-	-	18"	CPP	
RP-7	S-20	RS-7	22	Y	-	-	-	24"	CPP	
SANITARY MAINTENANCE PATH										
RP-5	RS-5	RS-6	50	Y	-	-	-	18"	CPP	

SPECIFIC NOTES:

[1] ENDWALL DISCHARGE INVERT TO MATCH PRIMARY DRAINAGE SWALE - SEE PRIVATE DEVELOPMENT PLANS FOR DRAINAGE SWALE DESIGN
[2] TIE-IN TO EXISTING DRAINAGE DITCH, EI = 881.43 PER DEVELOPER - SEE DEVELOPMENT STORM WATER MANAGEMENT PLAN
[3] TOP OF FRAME TO MATCH DRAINAGE DITCH LOW POINT, BEEHIVE GRATE SHOULD SIT ABOVE LOW POINT
[4] ENDWALL INVERTS TO MATCH DRAINAGE SWALE, S-11 TO MATCH DRAINAGE DITCH LOW POINT
[5] PORTION OF P-7A, S-7A, AND RP-1 LOCATED IN TOWN OF COTTAGE GROVE RIGHT-OF-WAY - COORDINATE FOR REMOVAL
[6] TOP OF CASTING ELEVATION SET 0.2 FEET BELOW TOP OF CURB AT STRUCTURE LOCATION, CONSTRUCT IN ACCORDANCE WITH SDD 5.7.12B
[7] TIE-IN TO EXISTING DRIVEWAY CULVERT PIPE, APPROXIMATE EI = 880.46 AT TIE-IN
[8] TIE-IN TO RELOCATED DRAINAGE DITCH, EI = 881.87
● **[9] ENDWALL INVERT TO MATCH DRAINAGE SWALE LOW POINT TO GREATEST EXTENT POSSIBLE**
● **[10] MATCH ELEVATION OF EXISTING 18" CPP END (RS-5)**

STORM ULO SCHEDULE

ID NO. (OFFSET)	STATION	LOCATION (OFFSET)	TYPE	NOTES
LUDS LN				
ULO1-G	15+54.09	RT-17.00	GAS	
ULO2A-E	21+99.97	RT-17.78	ELECTRIC	
ULO2B-E	21+91.53	RT-17.83	ELECTRIC	

STANDARD NOTES:

- ABBREVIATIONS: AE = APRON ENDWALL; RCP = REINFORCED CONCRETE PIPE; HERCP = HORIZONTAL ELLIPTICAL REINFORCED CONCRETE PIPE; DNA = DOES NOT APPLY; SAS = SEWER ACCESS STRUCTURE; LP = LOW POINT INLET STRUCTURE; FP = FIELD POURED STRUCTURE; TR = TOP OF CONCRETE ROOF; NCM = NO CROWN MATCH FOR PIPES; UD = UNDERDRAIN
- PLAN LENGTH (PAY LENGTH) IS FROM CENTER OF STRUCTURE TO CENTER OF STRUCTURE. PIPE LENGTH IS ACTUAL LENGTH OF PIPE FROM STRUCTURE WALL TO STRUCTURE WALL. SLOPE CALCULATED USING PIPE LENGTH.
- TOP OF CASTING GRADE GIVEN IS THE TOP OF CURB FOR INLET STRUCTURES AND THE FLOWLINE OF THE CLOSED CASTING FOR SAS.

- APPROXIMATE DISCHARGE E.I. GIVEN, ADJUST E.I. AND PIPE SLOPE IN THE FIELD.
- ALL REINFORCED CONCRETE PIPES TO BE CLASS 3 UNLESS OTHERWISE NOTED.

-ALL FIELD POURED SAS STORM STRUCTURES SHALL BE CONSTRUCTED IN ACCORDANCE WITH STANDARD DETAIL DRAWING 5.7.3. ALL PRECAST SAS STORM STRUCTURES SHALL BE CONSTRUCTED IN ACCORDANCE WITH STANDARD DETAIL DRAWING 5.7.5.

- ALL STRUCTURES CALLED OUT AS FIELD POURED SHALL BE FIELD POURED. ALL OTHER STRUCTURES (NOT INDICATED AS FIELD POURED) SHALL BE SUBMITTED TO CITY ENGINEERING FOR APPROVAL ECEFALU@CITYOFMADISON.COM ((608) 243-5894).

-ALL REBAR FOR FIELD POURED STRUCTURES SHALL BE EPOXY COATED. ANY EXPOSED STEEL SHALL BE TOUCHED UP OR RECOATED PRIOR TO USE.

- SURVEYOR TO CONFIRM THAT ALL INLET STATION / OFFSETS LINE UP WITH PROPOSED CURB AND GUTTER.

REVISION 3: 2025-06-06 TDP
REVISED WATER ALIGNMENT

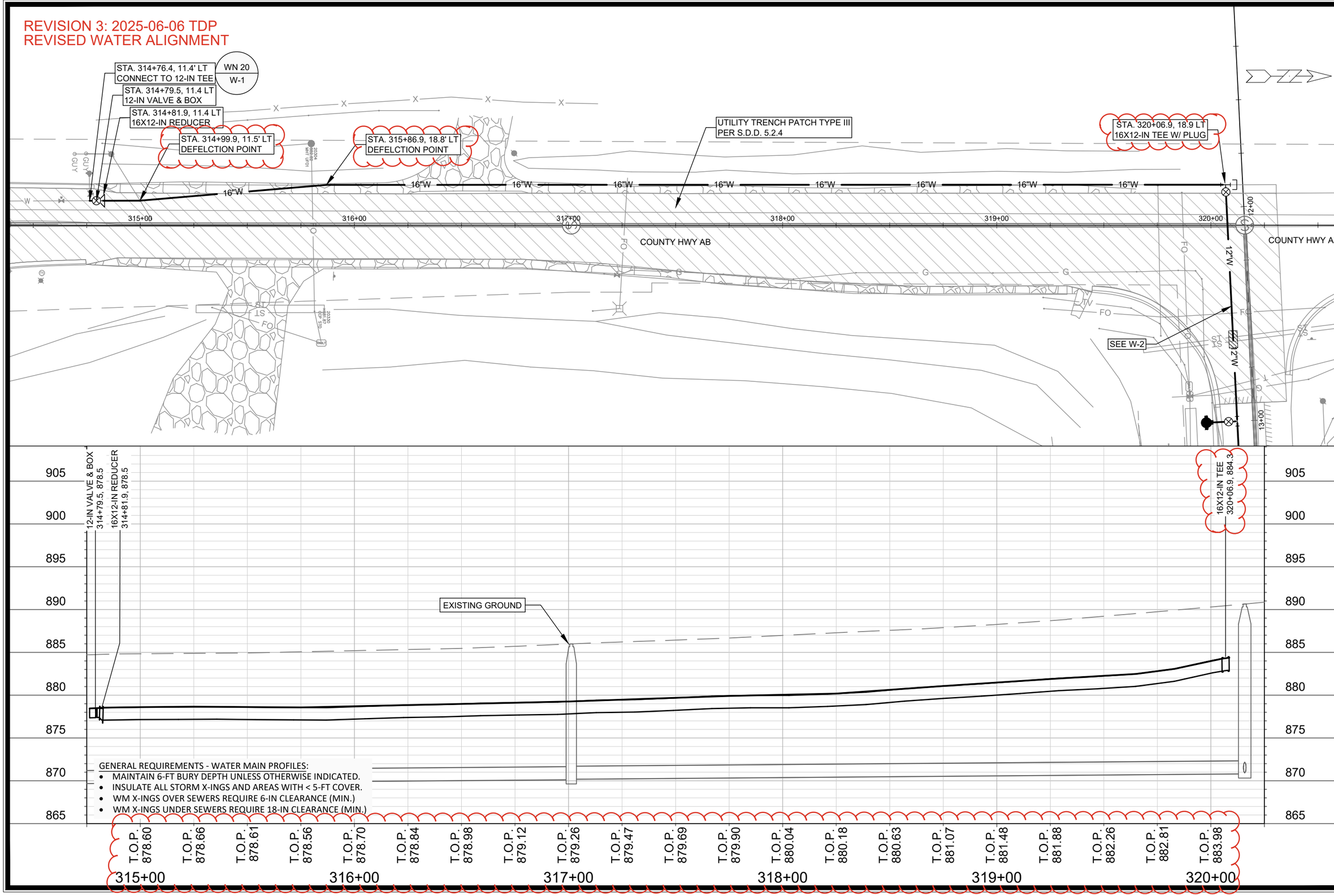

GENERAL REQUIREMENTS - WATER MAIN PROFILES:

- MAINTAIN 6-FT BURY DEPTH UNLESS OTHERWISE INDICATED.
- INSULATE ALL STORM X-INGS AND AREAS WITH < 5-FT COVER.
- WM X-INGS OVER SEWERS REQUIRE 6-IN CLEARANCE (MIN.)
- WM X-INGS UNDER SEWERS REQUIRE 18-IN CLEARANCE (MIN.)

MARK	REVISION	DATE	BY
---	---	---	---
---	---	---	---
---	---	---	---
---	---	---	---
---	---	---	---

Designed By: TDP
Date:
Scale: 1" = 40'
14950
W-1

14950

MADISON, WI

9481

CONTRACT NO:

WATER PLAN & PROFILE - EXISTING COUNTY HWY AB

LUDS LANE AND FEMRITE DRIVE CSM

M:\DESIGN\Projects\14950\CAD\Water\14950WU Water.dwg

CITY OF MADISON WISCONSIN

14950

W-1

REVISION 3: 2025-06-06 TDP
REVISED WATER ALIGNMENT

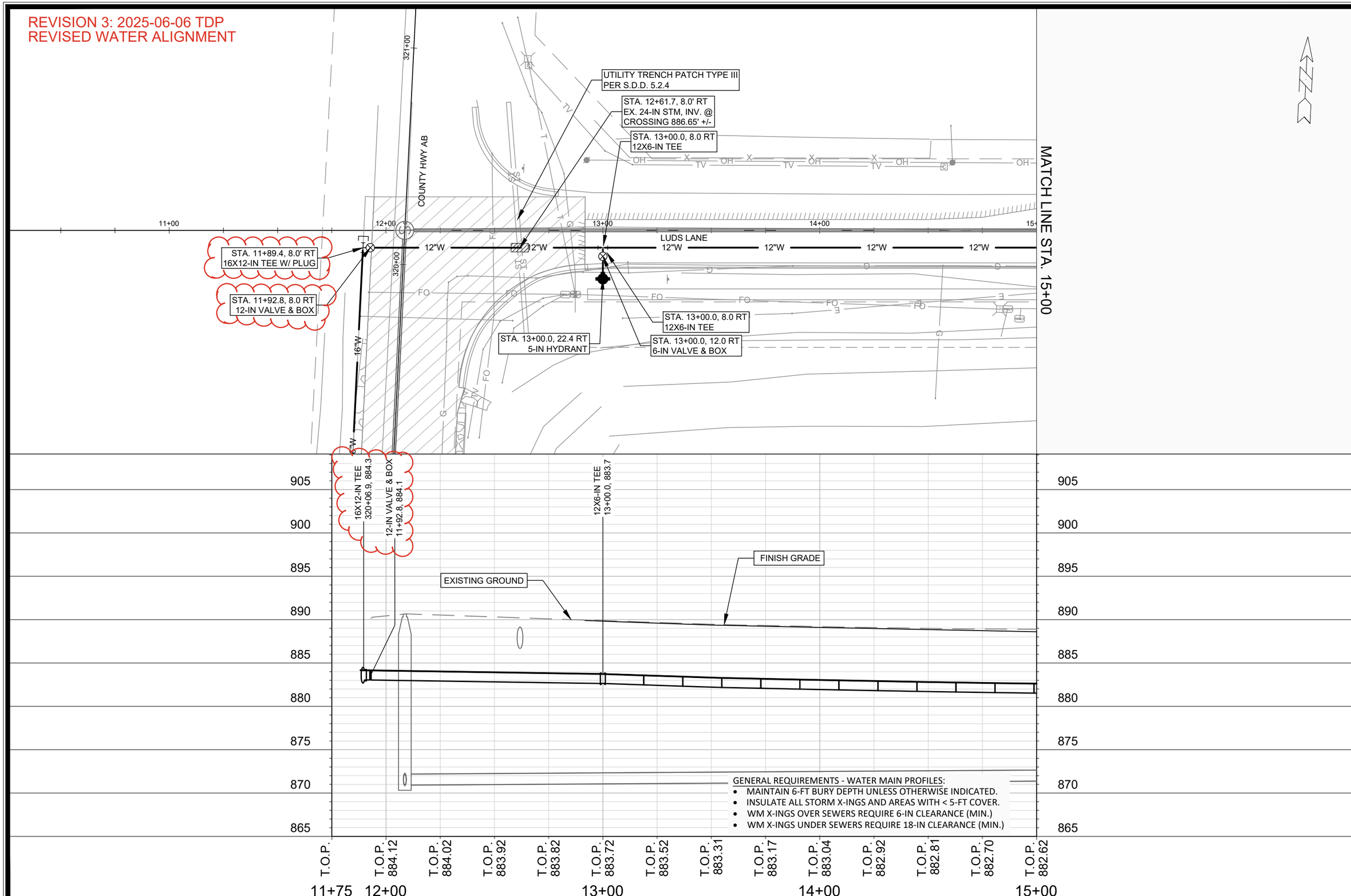

MARK	REVISION	DATE	BY
---	---	---	---
---	---	---	---
---	---	---	---
---	---	---	---

Designed By: TDP | Date: 6/12/2025 11:59 AM | Scale: 1" = 40'

14950

W-2

14950

MADISON, WI

9481

CONTRACT NO:

WATER PLAN & PROFILE - LUDS LANE

LUDS LANE AND FEMRITE DRIVE CSM

M:\DESIGN\Projects\14950\CAD\Water\14950WU Water.dwg

CITY OF MADISON WISCONSIN

14950

W-2

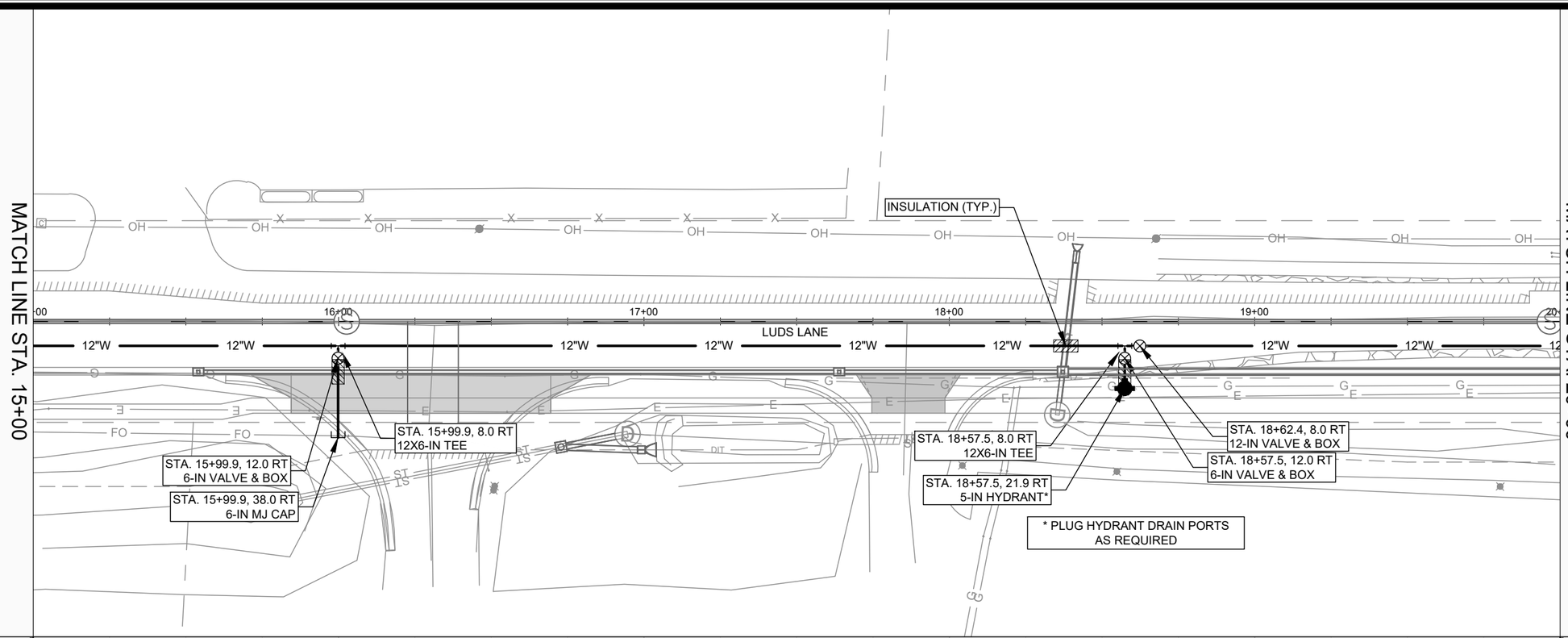

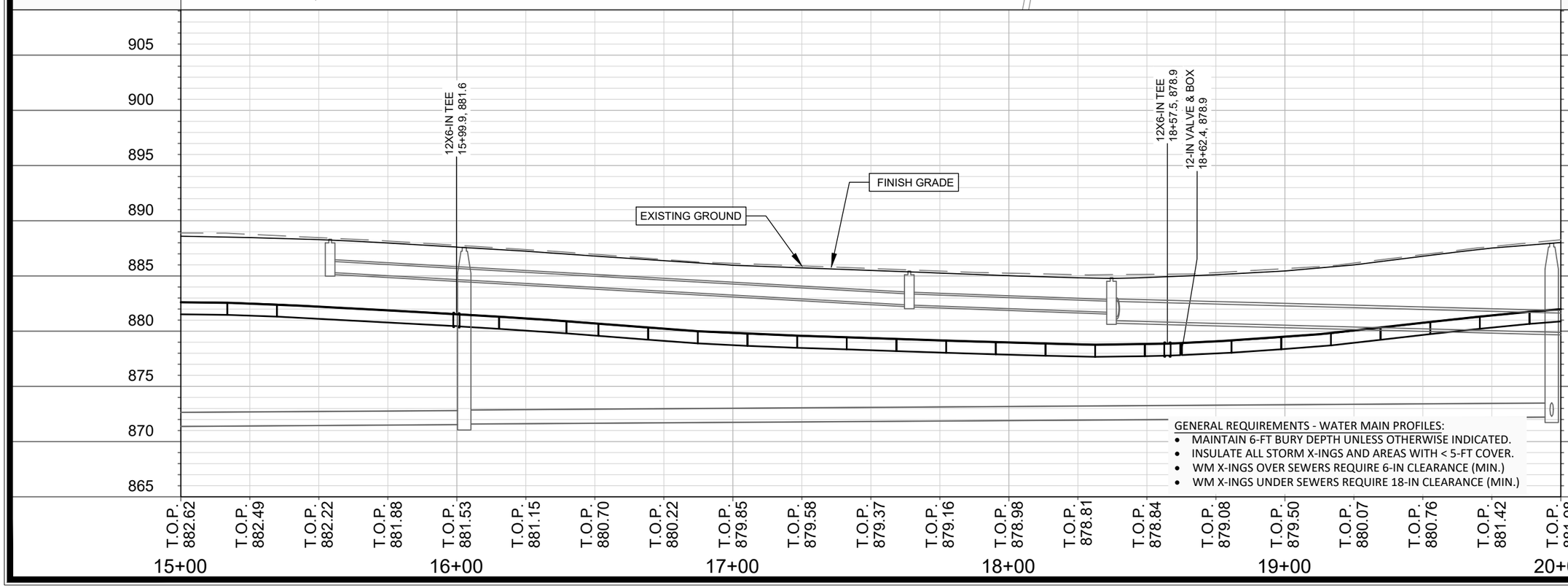

GENERAL REQUIREMENTS - WATER MAIN PROFILES:

- MAINTAIN 6-FT BURY DEPTH UNLESS OTHERWISE INDICATED.
- INSULATE ALL STORM X-INGS AND AREAS WITH < 5-FT COVER.
- WM X-INGS OVER SEWERS REQUIRE 6-IN CLEARANCE (MIN.)
- WM X-INGS UNDER SEWERS REQUIRE 18-IN CLEARANCE (MIN.)

MARK	REVISION	DATE	BY
---	---	---	---
---	---	---	---
---	---	---	---
---	---	---	---

Designed By: TDP | Date: 10/14/2024 10:56 AM | Scale:

14950

W-3

14950

MADISON, WI

CONTRACT NO: 9481

WATER PLAN & PROFILE - LUDS LANE

LUDS LANE AND FEMRITE DRIVE CSM

M:\DESIGN\Projects\14950\CAD\Water\14950WU Water.dwg

CITY OF MADISON WISCONSIN

14950

W-3

REV. #1 - ADDED HYDRANT - 4/10/25 NGM

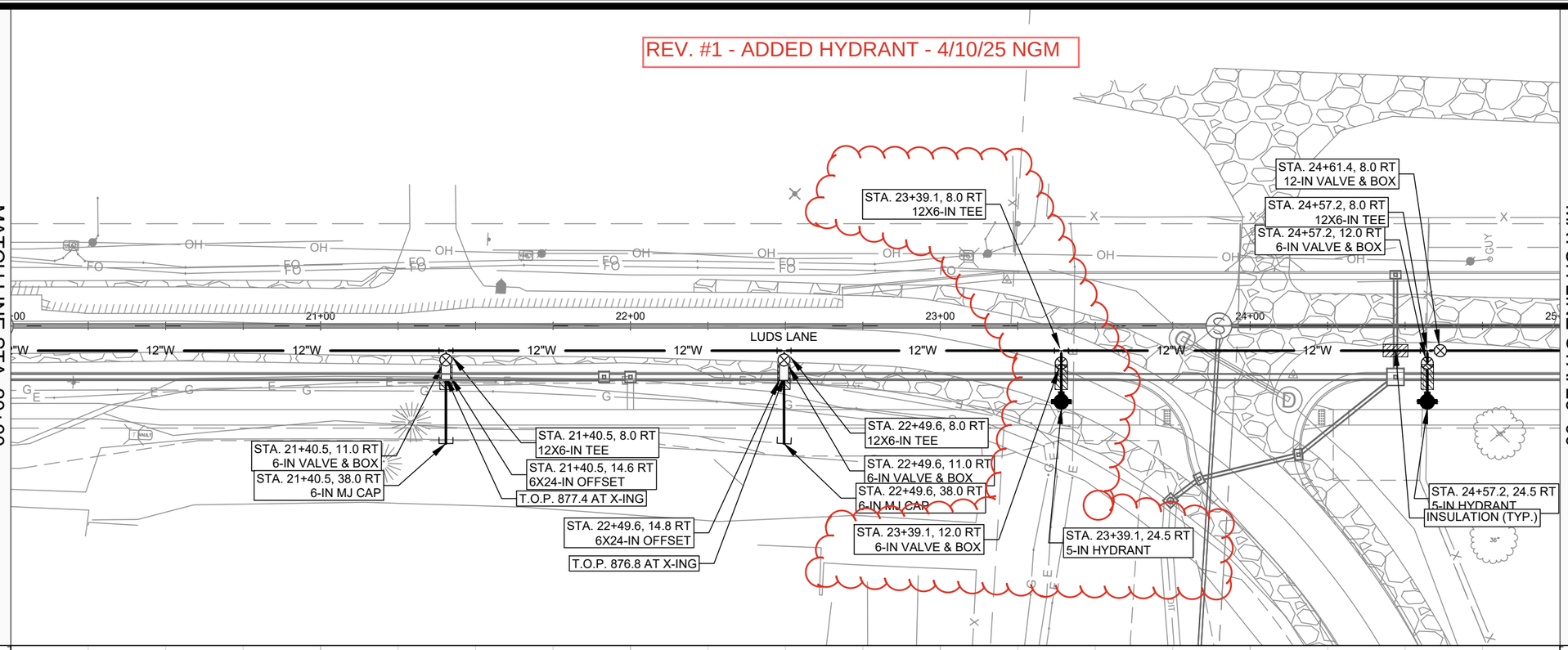

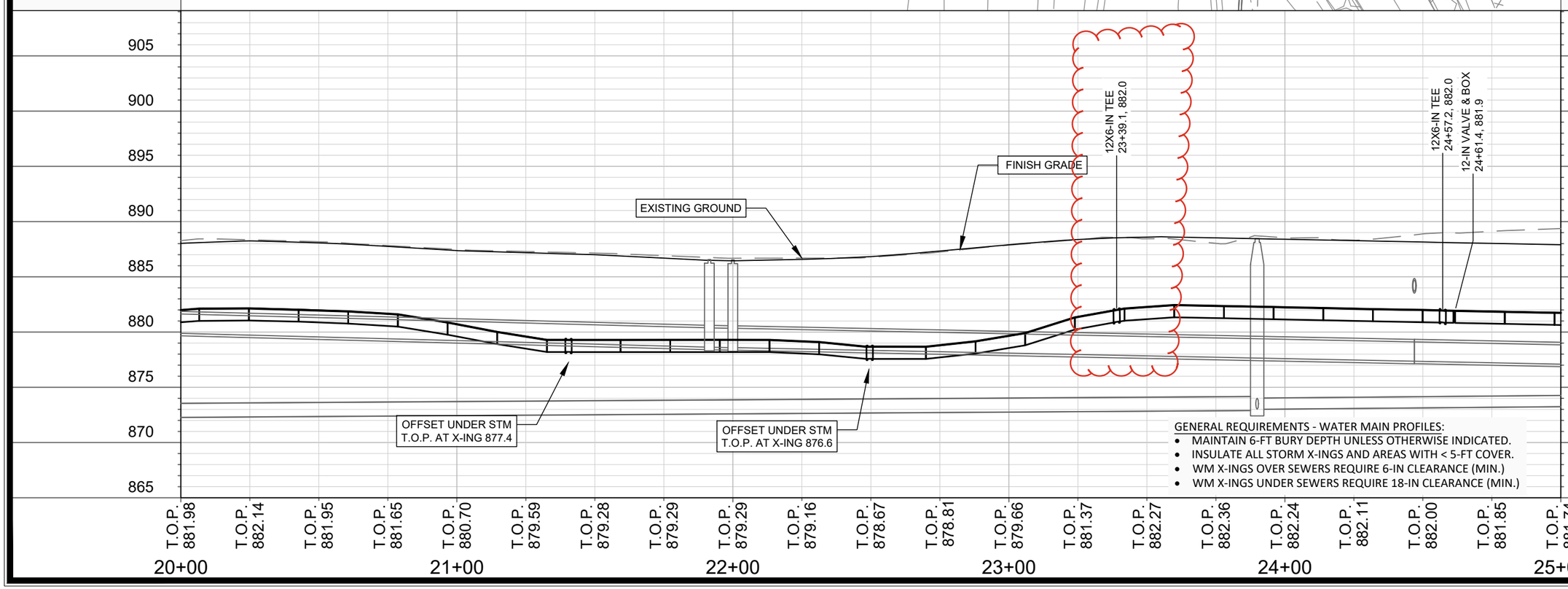

GENERAL REQUIREMENTS - WATER MAIN PROFILES:

- MAINTAIN 6-FT BURY DEPTH UNLESS OTHERWISE INDICATED.
- INSULATE ALL STORM X-INGS AND AREAS WITH < 5-FT COVER.
- WM X-INGS OVER SEWERS REQUIRE 6-IN CLEARANCE (MIN.)
- WM X-INGS UNDER SEWERS REQUIRE 18-IN CLEARANCE (MIN.)

MARK	REVISION	DATE	BY
---	---	---	---
---	---	---	---
---	---	---	---
---	---	---	---

Designed By: TDP | Date: 4/10/2025 2:24 PM | Scale: 1" = 40'

14950 | W-4

14950

MADISON, WI

CONTRACT NO: 9481

WATER PLAN & PROFILE - LUDS LANE

LUDS LANE AND FEMRITE DRIVE CSM

M:\DESIGN\Projects\14950\CAD\Water\14950WU Water.dwg

CITY OF MADISON WISCONSIN

14950

W-4

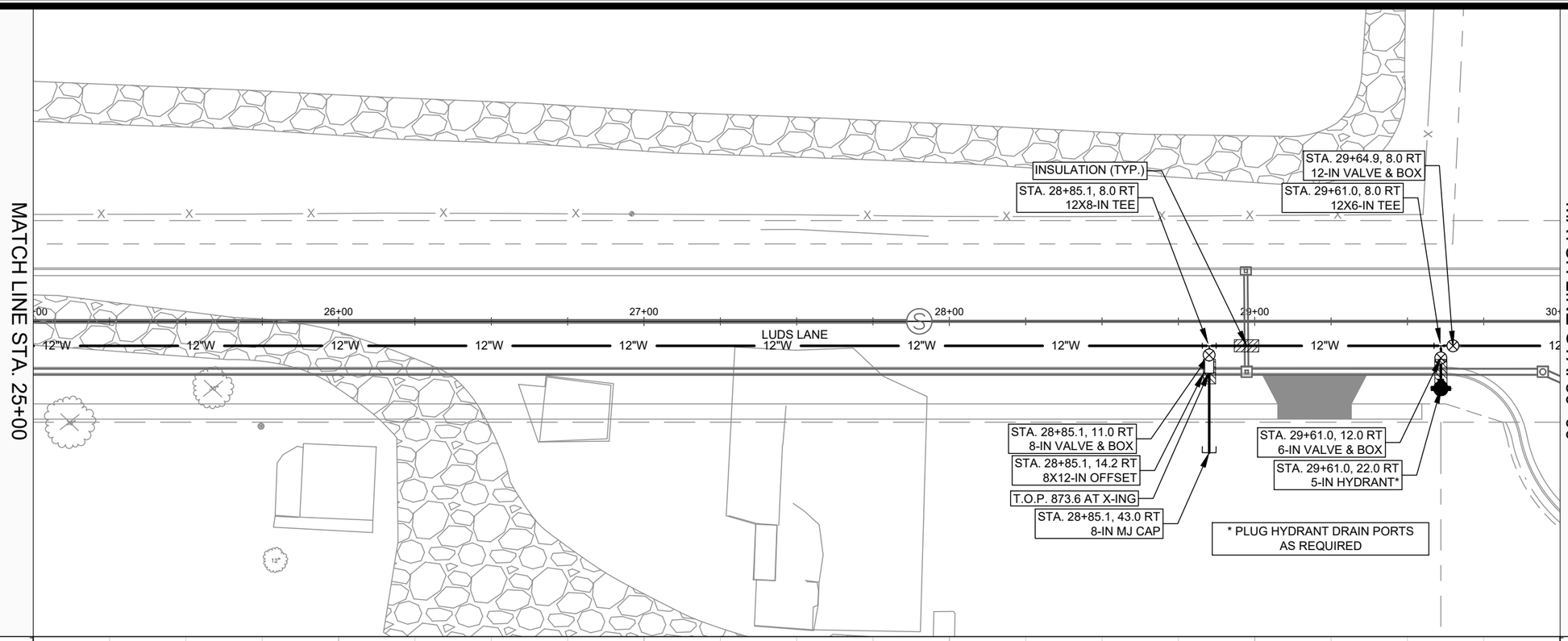

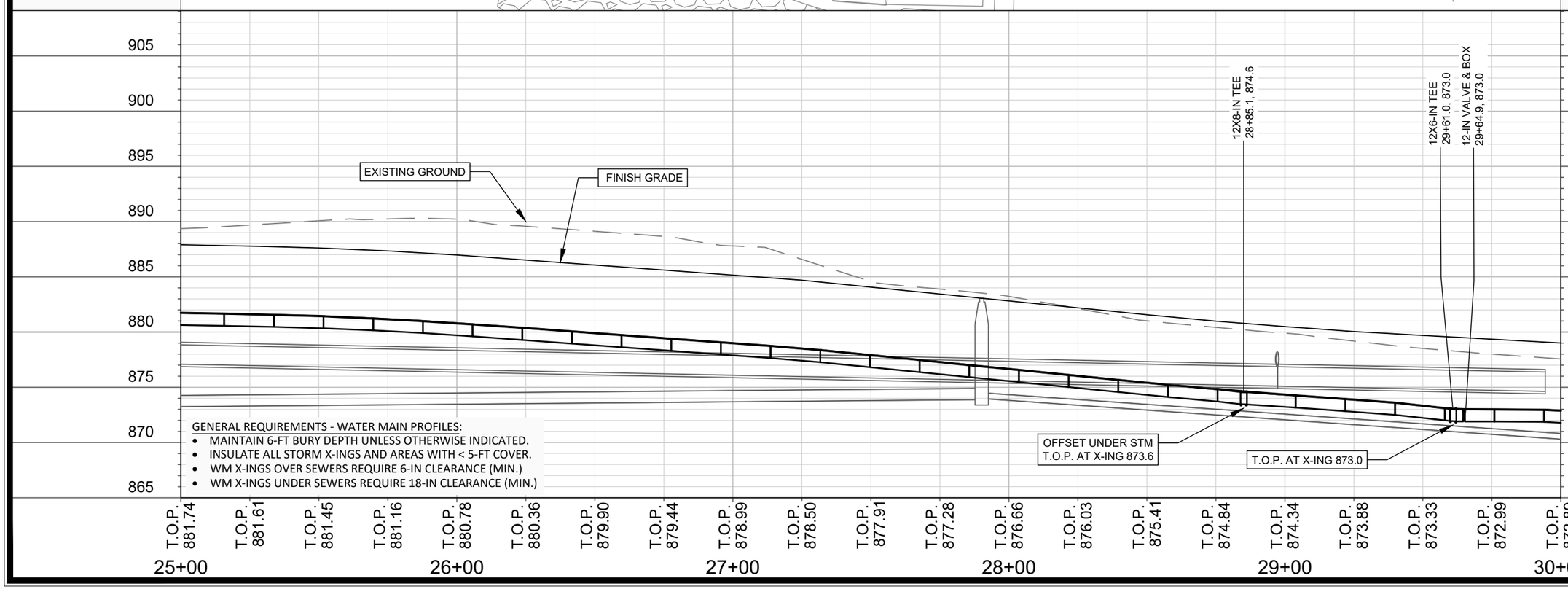

GENERAL REQUIREMENTS - WATER MAIN PROFILES:

- MAINTAIN 6-FT BURY DEPTH UNLESS OTHERWISE INDICATED.
- INSULATE ALL STORM X-INGS AND AREAS WITH < 5-FT COVER.
- WM X-INGS OVER SEWERS REQUIRE 6-IN CLEARANCE (MIN.)
- WM X-INGS UNDER SEWERS REQUIRE 18-IN CLEARANCE (MIN.)

MARK	REVISION	DATE	BY
---	---	---	---
---	---	---	---
---	---	---	---
---	---	---	---

Designed By: TDP | Date: 10/14/2024 10:56 AM | Scale: 1" = 40'

14950

W-5

14950

MADISON, WI

9481

CONTRACT NO:

WATER PLAN & PROFILE - LUDS LANE

LUDS LANE AND FEMRITE DRIVE CSM

M:\DESIGN\Projects\14950\CAD\Water\14950WU Water.dwg

CITY OF MADISON WISCONSIN

14950

W-5

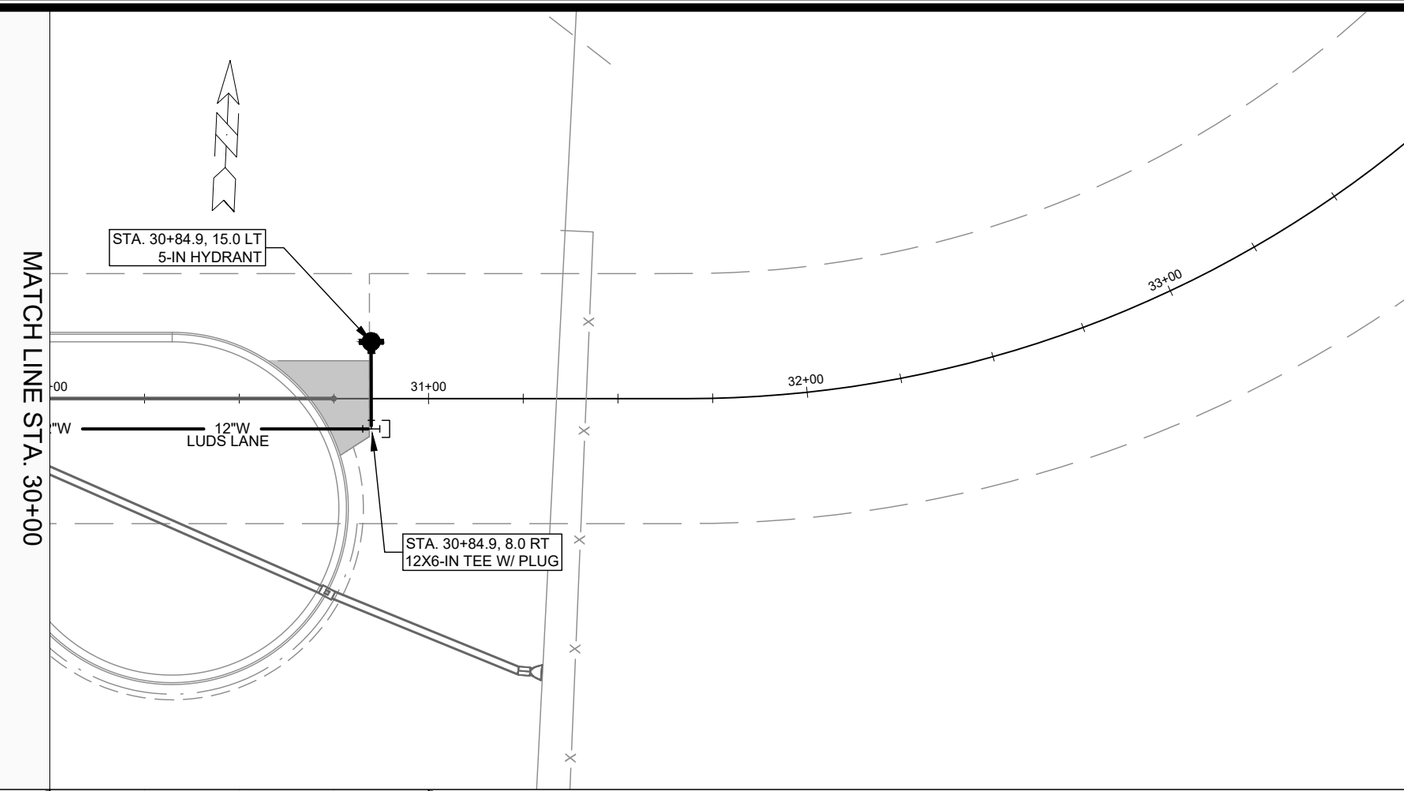

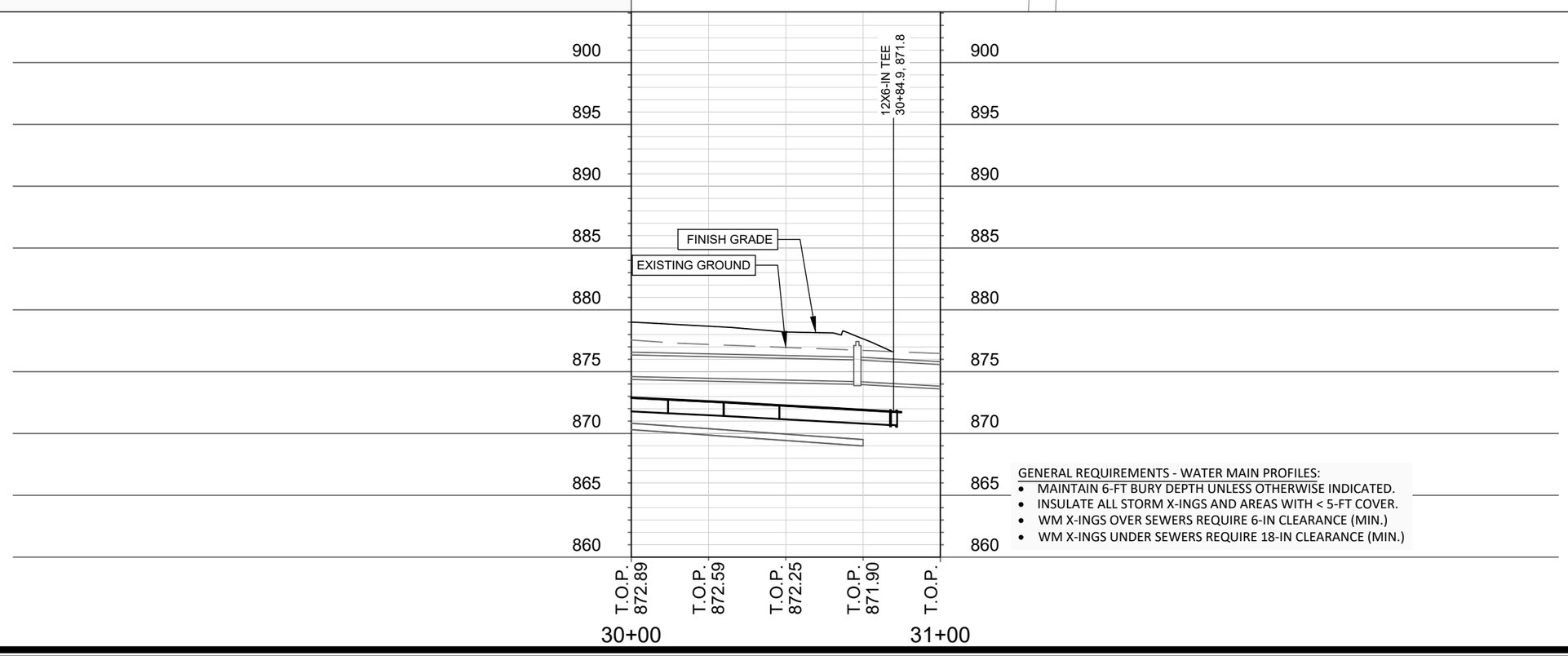

GENERAL REQUIREMENTS - WATER MAIN PROFILES:

- MAINTAIN 6-FT BURY DEPTH UNLESS OTHERWISE INDICATED.
- INSULATE ALL STORM X-INGS AND AREAS WITH < 5-FT COVER.
- WM X-INGS OVER SEWERS REQUIRE 6-IN CLEARANCE (MIN.)
- WM X-INGS UNDER SEWERS REQUIRE 18-IN CLEARANCE (MIN.)

MARK	REVISION	DATE	BY
---	---	---	---
---	---	---	---
---	---	---	---
---	---	---	---

Designed By: TDP | Date: 10/14/2024 10:56 AM | Scale: 1" = 40'

14950 | W-6

14950

MADISON, WI

9481

CONTRACT NO:

WATER PLAN & PROFILE - LUDS LANE

LUDS LANE AND FEMRITE DRIVE CSM

M:\DESIGN\Projects\14950\CAD\Water\14950WU Water.dwg

14950

W-6

REV. #1 - UPDATED IMPACT PLAN - 4/10/25 NGM

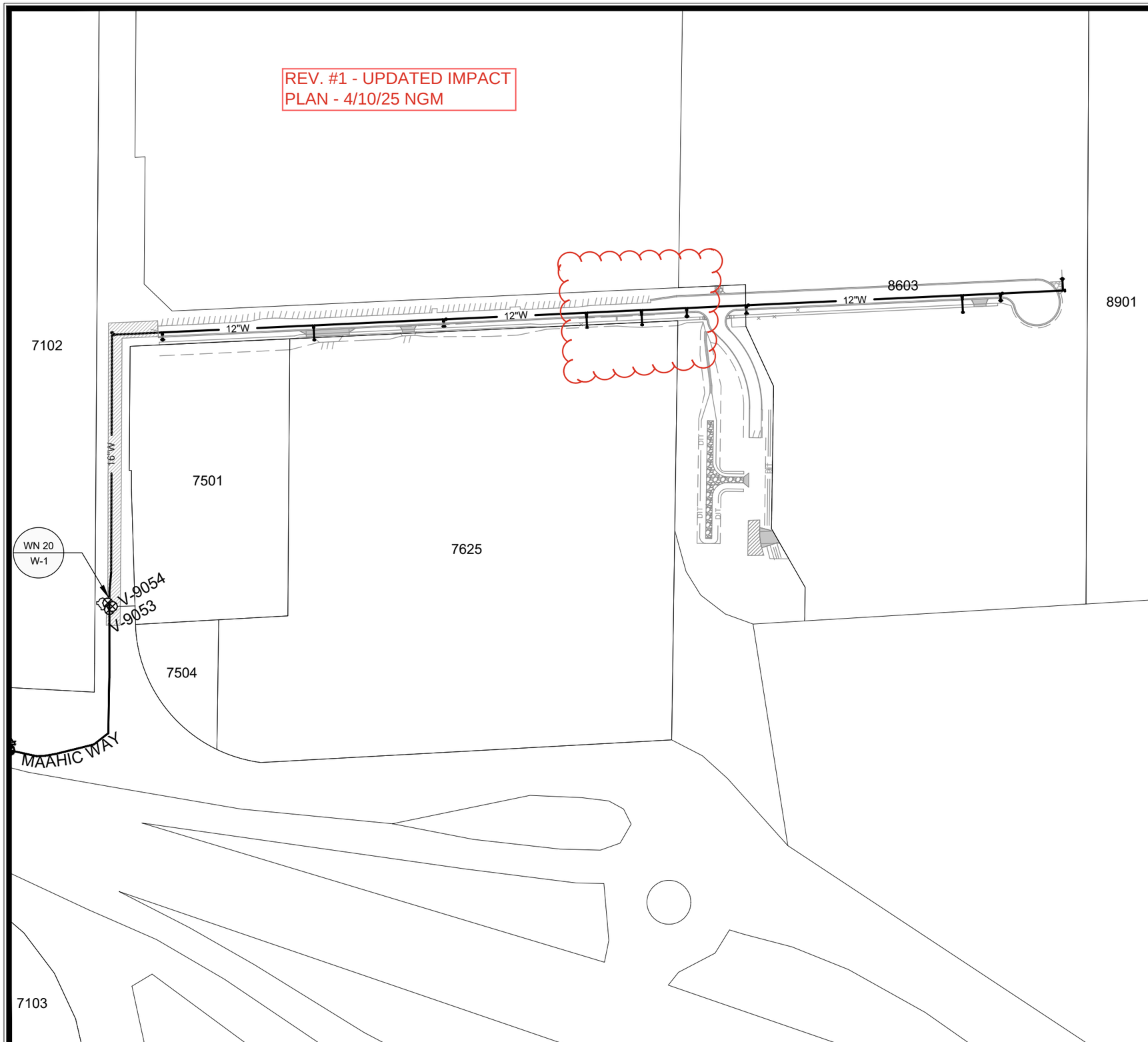

1" = 200'

Madison Water Utility

WN20 W-1: CONNECT TO EX. 12-IN TEE
ISOLATION VALVE: V-9053
NOTIFICATIONS: NONE REQUIRED

DISCLAIMER NOTE:
THE WATER IMPACT PLAN IS PROVIDED FOR REFERENCE PURPOSES TO AID PLANNING CONNECTION POINT ISOLATION AND PREPARING NOTIFICATION LISTS DURING PLANNED OUTAGES. REQUEST ANY ALTERNATIVE CONNECTION METHODS IN WRITING, PER SPECS.

MARK	REVISION	DATE	BY
---	---	---	---
---	---	---	---
---	---	---	---
---	---	---	---
---	---	---	---

Designed By: TDP | Date: 4/10/2025 2:24 PM | Scale: 1" = 200'

14950

W-7

14950

MADISON, WI

9481

CONTRACT NO:

WATER IMPACT PLAN

LUDS LANE AND FEMRITE DRIVE CSM

M:\DESIGN\Projects\14950\CAD\Water\14950WU Impact Plan.dwg

CITY OF MADISON WISCONSIN

14950

W-7

CONSTRUCTION NOTES:

1. CONSTRUCT NEW WATER MAIN 6.0' BELOW FINISHED GRADE, UNLESS OTHERWISE NOTED. INSULATE MAIN WITH POLYSTYRENE BOARD AT STORM CROSSINGS AND OTHER AREAS IDENTIFIED BY ENGINEER AS HAVING INADEQUATE COVER.
2. VERIFY SIZE OF EXISTING WATER SERVICES AND RECONNECT SERVICES AS INDICATED.
3. MINIMIZE DISRUPTION OF SERVICE TO CUSTOMERS. NOTIFY PER CONTRACT REQUIREMENTS OF ANY PLANNED WATER OUTAGE.

WN-1	REPLACE THE EXISTING LEAD SERVICE WITH A NEW COPPER SERVICE.
WN-2	EXTEND AND RECONNECT THE EXISTING COPPER SERVICE TO THE NEW WATER MAIN.
WN-3	EXISTING SERVICE TO BE ABANDONED WHEN THE WATER MAIN IS CUT OFF.
WN-4	DISCONNECT FROM THE OLD WATER MAIN AND RECONNECT THE EXISTING COPPER WATER SERVICE LATERAL TO THE NEW WATER MAIN.
WN-5	RELOCATE THE EXISTING FIRE HYDRANT.
WN-6	ABANDON WATER VALVE ACCESS STRUCTURE.
WN-7	FURNISH AND INSTALL THE NEW TOP SECTION FOR THE WATER ACCESS STRUCTURE.
WN-8	ABANDON THE VALVE BOX.
WN-9	FURNISH THE DITCH, COMPACTION, AND ALL MATERIALS AND LABOR FOR THE INSTALLATION OF NEW SERVICE LATERAL.
WN-10	REMOVE AND SALVAGE EXISTING HYDRANT
WN-11	REPLACE THE EXISTING COPPER SERVICE WITH A COPPER SERVICE
WN-20+	SEE WATER IMPACT PLAN FOR CONNECTION POINT ISOLATION AND WATER SHUT-OFF NOTIFICATION INFORMATION.

WATER UTILITY ULO SCHEDULE

ULO	UTILITY	STATION	OFFSET	SHEET

REV. #1 - UPDATED MATERIALS - 4/10/25 NGM

*ESTIMATE OF MATERIALS SUPPLIED BY CONTRACTOR:

PAY ITEM ID	DESCRIPTION	QUANTITY	UNIT
70002	FURNISH AND INSTALL 6-INCH PIPE & FITTINGS	180	LNFT
70003	FURNISH AND INSTALL 8-INCH PIPE & FITTINGS	40	LNFT
70005	FURNISH AND INSTALL 12-INCH PIPE & FITTINGS	1900	LNFT
70006	FURNISH AND INSTALL 16-INCH PIPE & FITTINGS	540	LNFT
70031	FURNISH AND INSTALL 6-INCH WATER VALVE	8	EACH
70032	FURNISH AND INSTALL 8-INCH WATER VALVE	1	EACH
70034	FURNISH AND INSTALL 12-INCH WATER VALVE	5	EACH
70040	FURNISH AND INSTALL AND SALVAGE HYDRANT	6	EACH
70101	FURNISH AND INSTALL STYROFOAM	12	EACH
71001	6-IN MJ CAP	3	EACH
71002	8-IN MJ CAP	1	EACH
71016	12-IN MJ PLUG	1	EACH
71018	16-IN MJ PLUG	1	EACH
71174	16X12-IN REDUCER	1	EACH
71217	12X6-IN TEE	9	EACH
71218	12X8-IN TEE	1	EACH
71231	16X12-IN TEE	1	EACH
71339	6X24-IN OFFSET	2	EACH
71340	8X12-IN OFFSET	1	EACH
*ESTIMATE OF MATERIALS SALVAGED:			
	12-IN MJ PLUG	1	EACH

** ESTIMATE OF MATERIALS IS FOR INFORMATION ONLY. ENGINEER DOES NOT GUARANTEE ACCURACY OF MATERIAL TAKE-OFF.*

TO OBTAIN LOCATION OF PARTICIPANTS' UNDERGROUND FACILITIES BEFORE YOU DIG IN WISCONSIN

CALL DIGGERS HOTLINE
TOLL FREE
811 OR 1-800-242-8511
FAX-A-LOCATE 1-800-338-3860
TDD (FOR HEARING IMPAIRED) 1-800-542-2289

WIS. STATUTE 182.0175 (1974) REQUIRES MIN. OF 3 WORK DAYS NOTICE BEFORE YOU EXCAVATE.

MEMBER ONE CALL SYSTEMS INTERNATIONAL

DISCLAIMER NOTE: UTILITY LOCATIONS SHOWN ARE APPROXIMATE ONLY. IT SHALL BE THE CONTRACTOR'S RESPONSIBILITY TO DETERMINE THE EXACT HORIZONTAL AND VERTICAL LOCATION OF ALL EXISTING UNDERGROUND AND OVERHEAD UTILITIES PRIOR TO COMMENCING WORK.

PART VII - WATER MAINS AND SERVICE LATERALS

DETAIL DRAWING NO. **7.04**
REVISED: 11/2022

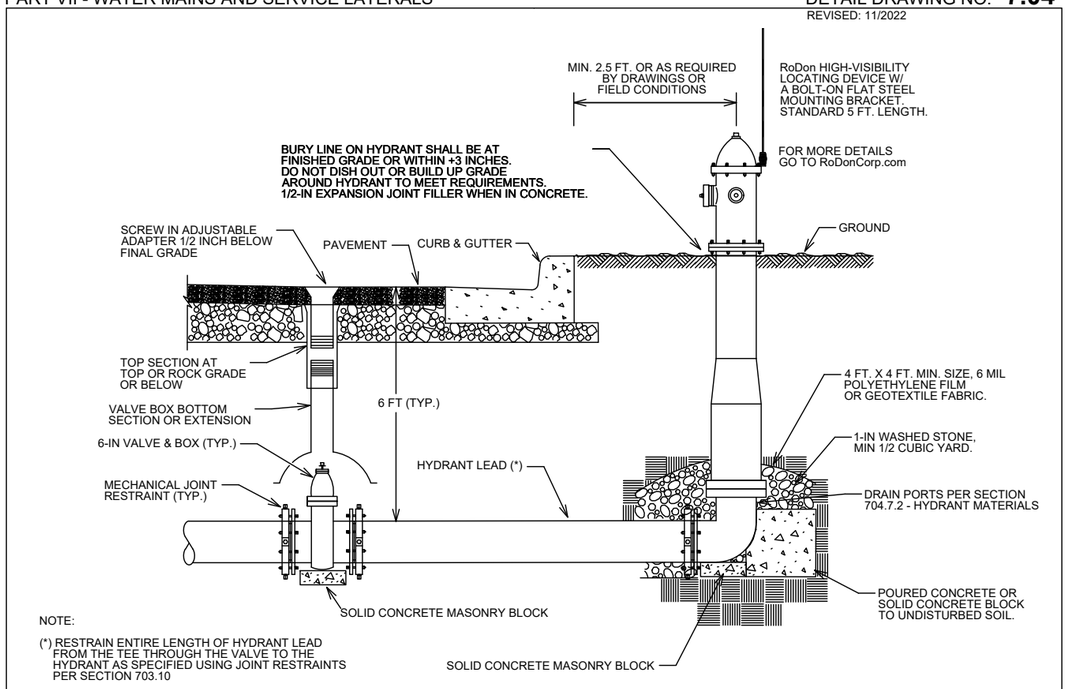

NOTE:

(*) RESTRAIN ENTIRE LENGTH OF HYDRANT LEAD FROM THE TEE THROUGH THE VALVE TO THE HYDRANT AS SPECIFIED USING JOINT RESTRAINTS PER SECTION 703.10

CITY OF MADISON WATER UTILITY	NOT TO SCALE	TYPICAL HYDRANT INSTALLATION

MARK	REVISION	DATE	BY
---	---	---	---
---	---	---	---
---	---	---	---
---	---	---	---

Designed By: IO | Date: 4/10/2025 2:25 PM | Scale: ########

14950

MADISON, WI

9481

CONTRACT NO:

WATER ESTIMATE OF MATERIALS

LUDS LANE AND FEMRITE DRIVE CSM

M:\DESIGN\Projects\14950\CAD\Water\14950WU Materials.dwg

14950

W-8

REVISION #3

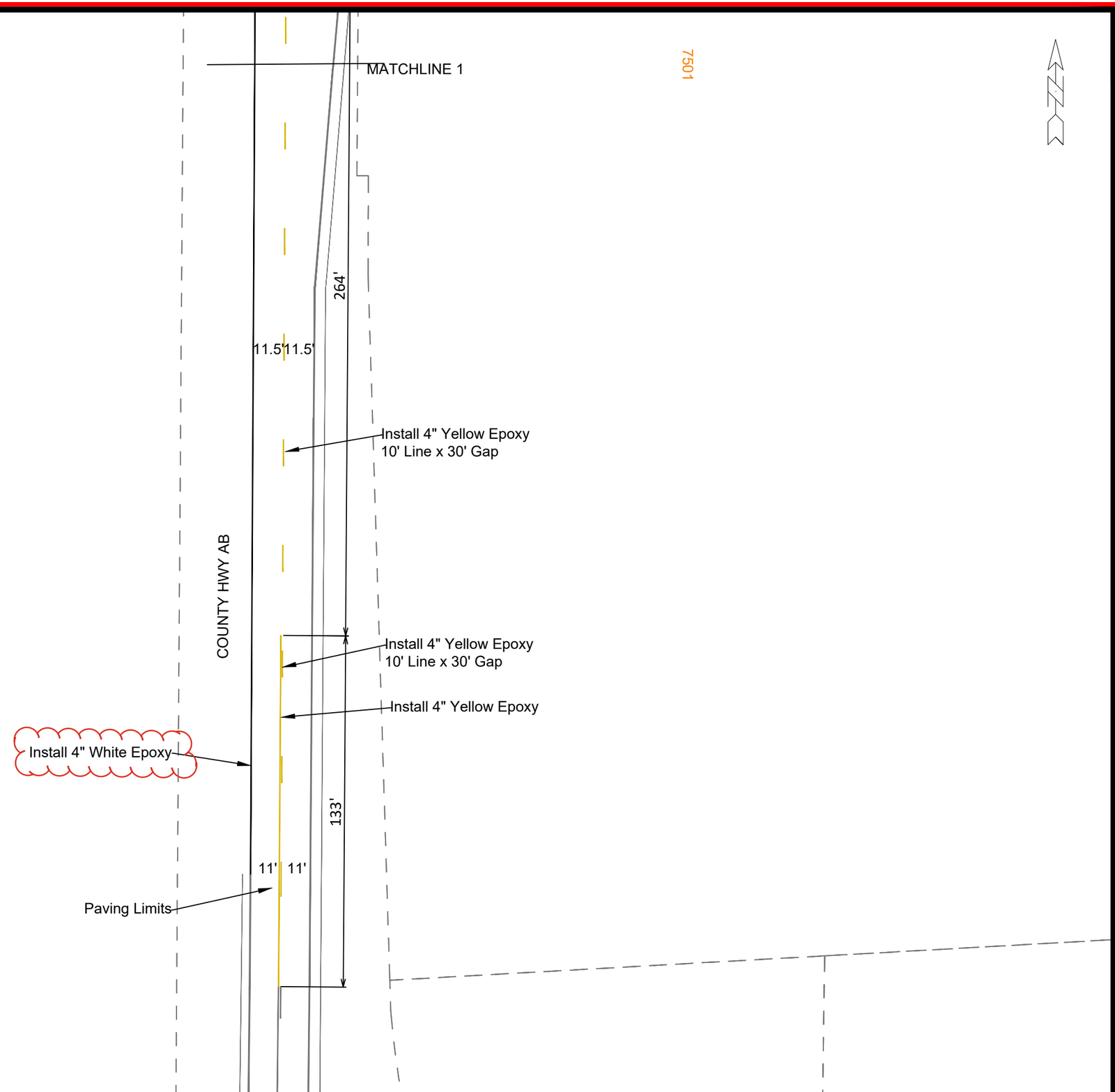

MARK	REVISION	DATE	BY
---	---	---	---
---	---	---	---
---	---	---	---
---	---	---	---
---	---	---	---

Designed By: CLP | Date: 09/18/2024 | Scale: 1:40 | PM-1

14950

MADISON, WI

CONTRACT NO: 9481

PAVEMENT MARKING PLAN

LUDS LANE AND FEMRITE DRIVE CSM

M:\DESIGN\Projects\14950\CAD\Traffic\14950TE-PavementMarking.dwg

14950

PM-1

REVISION #3

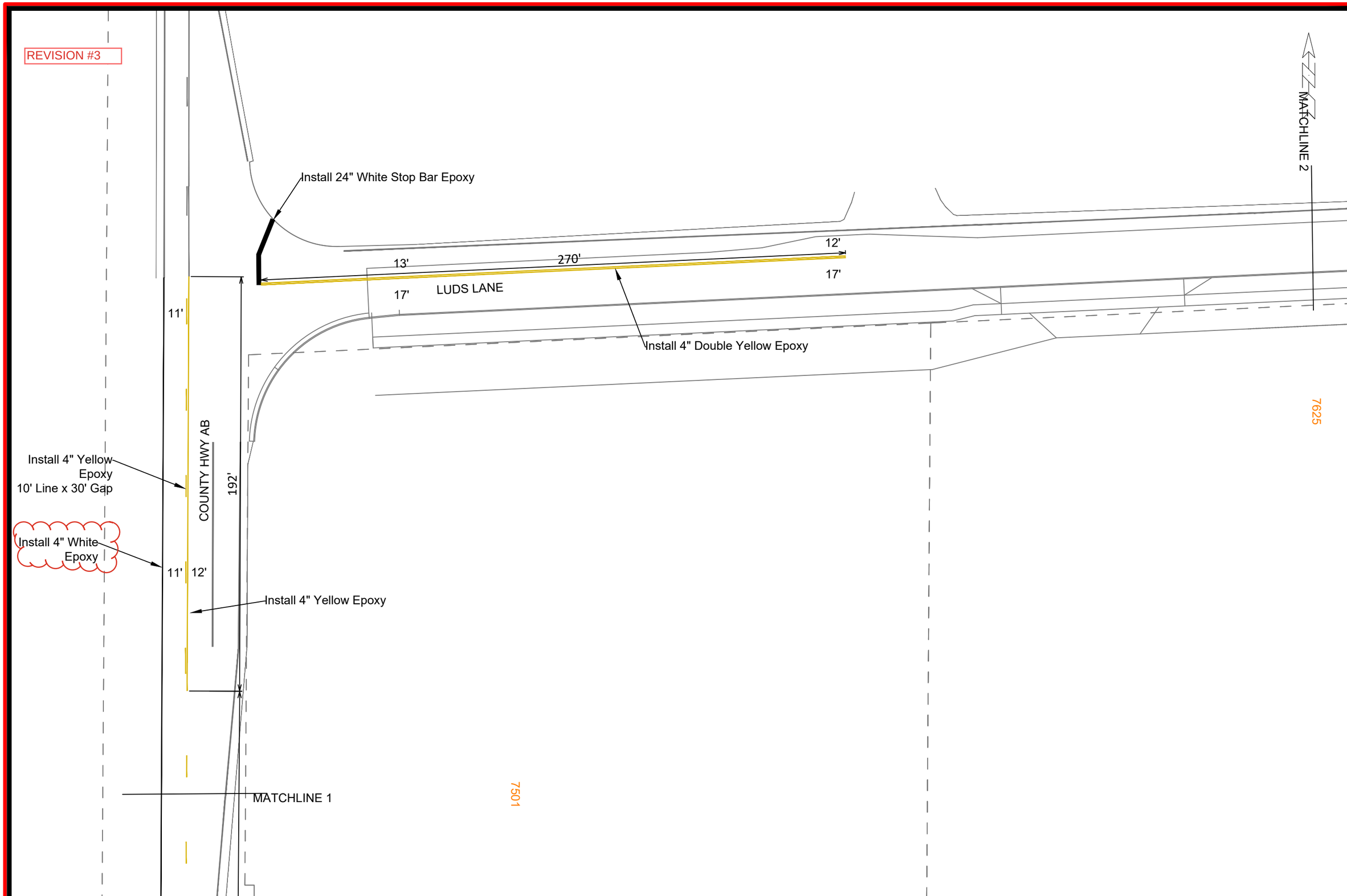

MARK	REVISION	DATE	BY
---	---	---	---
---	---	---	---
---	---	---	---
---	---	---	---
---	---	---	---

Designed By: CLP | Date: 09/18/2024 | Scale: 1:40 | PM-2

14950

14950

MADISON, WI

CONTRACT NO: 9481

PAVEMENT MARKING PLAN

LUDS LANE AND FEMRITE DRIVE CSM

M:\DESIGN\Projects\14950\CAD\Traffic\14950TE-PavementMarking.dwg

14950

PM-2

REVISION #3

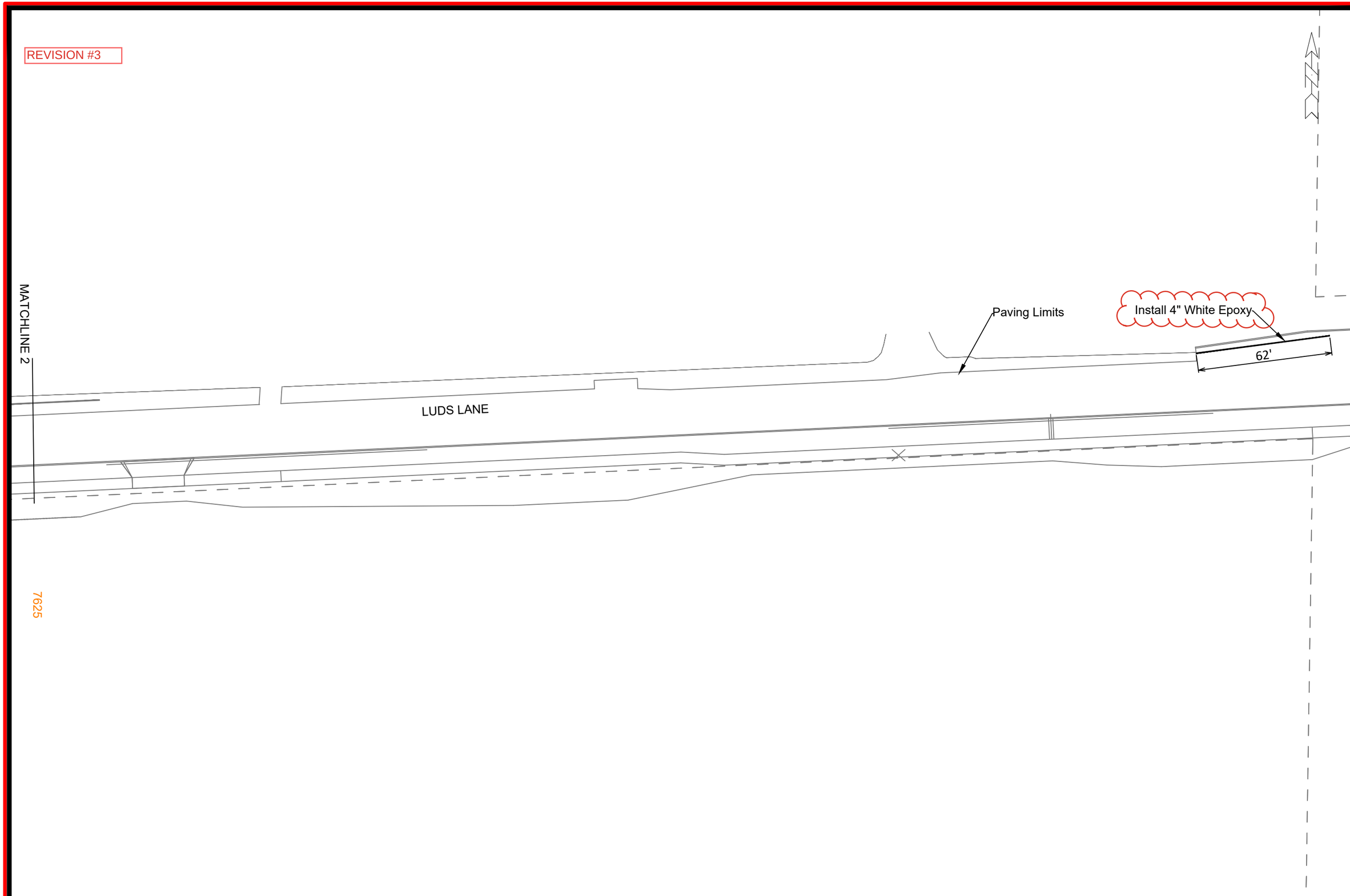

MARK	REVISION	DATE	BY
---	---	---	---
---	---	---	---
---	---	---	---
---	---	---	---

Designed By: CLP | Date: 09/18/2024 | Scale: 1:40 | PM-3

14950

MADISON, WI

CONTRACT NO: 9481

PAVEMENT MARKING PLAN

LUDS LANE AND FEMRITE DRIVE CSM

M:\DESIGN\Projects\14950\CAD\Traffic\14950TE-PavementMarking.dwg

14950

PM-3

GENERAL NOTES

1. REFER TO THE EXISTING CONDITIONS SURVEY FOR EXISTING CONDITIONS NOTES AND LEGENDS.

2. ALL WORK IN THE ROW AND/OR PUBLIC EASEMENTS SHALL BE IN ACCORDANCE WITH THE STANDARD SPECIFICATIONS AND JURISDICTIONAL SPECIFICATIONS AND REQUIREMENTS.

3. EXISTING GRADE SPOT ELEVATIONS SHOWN FOR INFORMATIONAL PURPOSES. DURING CONSTRUCTION MATCH EXISTING GRADES AT CONSTRUCTION LIMITS.

4. NO SITE GRADING OUTSIDE OR DOWNSLOPE OF PROPOSED SILT FENCE LOCATION. NO LAND DISTURBANCE BEYOND PROPERTY LINES.

5. JSD SHALL BE HELD HARMLESS AND DOES NOT WARRANT ANY DEVIATIONS BY THE OWNER/CONTRACTOR FROM THE APPROVED CONSTRUCTION PLANS THAT MAY RESULT IN DISCIPLINARY ACTIONS BY ANY OR ALL REGULATORY AGENCIES.

6. CONTRACTOR SHALL RESTORE ALL BUILDINGS, PAVEMENT, PIPES, SLOPES, AND STRUCTURES DAMAGED BY THE CONTRACTOR TO PRE-EXISTING OR BETTER CONDITIONS.

7. THE RIGHT-OF-WAY IS THE SOLE JURISDICTION OF THE JURISDICTIONAL AUTHORITY AND IS SUBJECT TO CHANGE AT ANY TIME.

8. ANY REFERENCES TO THE TERMS OR ENTITY ABBREVIATIONS IN THE FOLLOWING NOTES AND SPECIFICATIONS SHALL BE UNDERSTOOD AS FOLLOWS:
   - 8.1. "JURISDICTION " - THE LOCAL GOVERNMENTAL AGENCY (I.E. CITY, VILLAGE, TOWN, COUNTY, STATE OR UTILITY SERVICE PROVIDER) HAVING AUTHORITY.
   - 8.2. "STATE HIGHWAY SPECIFICATIONS" - STATE OF WISCONSIN STANDARD SPECIFICATIONS FOR HIGHWAY AND STRUCTURE CONSTRUCTION, CURRENT EDITION AND SUPPLEMENTS
   - 8.3. "STANDARD SPECIFICATIONS" - STANDARD SPECIFICATIONS FOR SEWER AND WATER CONSTRUCTION IN WISCONSIN, CURRENT EDITION & SUPPLEMENTS
   - 8.4. WISCONSIN DEPARTMENT OF TRANSPORTATION - "WISDOT"
   - 8.5. WISCONSIN DEPARTMENT OF NATURAL RESOURCES - "WDNR"
   - 8.6. DEPARTMENT OF SAFETY AND PROFESSIONAL SERVICES - "DSPS" OR "SPS"

9. THE PUBLIC IMPROVEMENT PLANS REFERENCED IN THESE PLANS SHALL BE CONSTRUED TO MEAN THE PLANS ISSUED BY THE CITY OF MADISON; **PROJECT #14950** AND ALL ITS REFERENCED AND ASSOCIATED DOCUMENTS.

EROSION CONTROL NOTES

1. CONTRACTOR IS RESPONSIBLE TO NOTIFY ENGINEER OF RECORD AND OFFICIALS OF ANY CHANGES TO THE EROSION CONTROL AND STORMWATER MANAGEMENT PLANS. ENGINEER OF RECORD AND APPROPRIATE JURISDICTIONAL AUTHORITIES OFFICIALS MUST APPROVE ANY CHANGES PRIOR TO DEVIATION FROM THE APPROVED PLANS.

2. ALL EROSION CONTROL MEASURES SHALL BE CONSTRUCTED AND MAINTAINED BY THE CONTRACTOR IN ACCORDANCE WITH WDNR TECHNICAL STANDARDS AND JURISDICTIONAL REQUIREMENTS. IT SHALL BE THE CONTRACTOR'S RESPONSIBILITY TO OBTAIN A COPY OF THESE STANDARDS. CONTRACTOR SHALL BE RESPONSIBLE FOR ANY ADDITIONAL EROSION CONTROL MEASURES WHICH MAY BE NECESSARY TO MEET UNFORESEEN FIELD CONDITIONS.

3. INSTALL PERIMETER EROSION CONTROL MEASURES (SUCH AS CONSTRUCTION ENTRANCES, SILT FENCE AND EXISTING INLET PROTECTION) PRIOR TO ANY SITE WORK, INCLUDING GRADING OR DISTURBANCE OF EXISTING SURFACE COVER, AS SHOWN ON PLAN. MODIFICATIONS TO THE APPROVED EROSION CONTROL DESIGN IN ORDER TO MEET UNFORESEEN FIELD CONDITIONS IS ALLOWED IF MODIFICATIONS CONFORM TO WDNR TECHNICAL STANDARDS AND JURISDICTIONAL REQUIREMENTS. ALL DESIGN MODIFICATIONS MUST BE APPROVED BY THE JURISDICTIONAL AUTHORITIES PRIOR TO DEVIATION OF THE APPROVED PLAN.

4. ADDITIONAL EROSION CONTROL MEASURES, AS REQUESTED BY STATE INSPECTORS, LOCAL INSPECTORS, COUNTY INSPECTORS AND/OR ENGINEER OF RECORD SHALL BE INSTALLED WITHIN 24 HOURS OF REQUEST.

5. INSPECTIONS AND MAINTENANCE OF ALL EROSION CONTROL MEASURES SHALL BE ROUTINE (ONCE PER WEEK MINIMUM) TO ENSURE PROPER FUNCTION OF EROSION CONTROLS AT ALL TIMES. EROSION CONTROL MEASURES ARE TO BE IN WORKING ORDER AT THE END OF EACH WORK DAY.

6. ALL EROSION AND SEDIMENT CONTROL ITEMS SHALL BE INSPECTED WITHIN 24 HOURS OF ALL RAIN EVENTS EXCEEDING 0.5 INCHES. ANY DAMAGED EROSION CONTROL MEASURES SHALL BE REPAIRED OR REPLACED IMMEDIATELY UPON INSPECTION.

7. CONSTRUCTION ENTRANCES SHALL BE INSTALLED AT ALL LOCATIONS OF VEHICLE INGRESS/EGRESS POINTS. ADDITIONAL LOCATIONS OTHER THAN AS SHOWN ON THE PLANS MUST BE PRE-APPROVED BY THE JURISDICTION. CONSTRUCTION ENTRANCES SHALL BE 50' LONG AND NO LESS THAN 12" THICK BY USE OF 3" CLEAR STONE. CONSTRUCTION ENTRANCES SHALL BE MAINTAINED BY THE CONTRACTOR IN A CONDITION WHICH WILL PREVENT THE TRACKING OF MUD OR DRY SEDIMENT ONTO ADJACENT PUBLIC STREETS AFTER EACH WORKING DAY OR MORE FREQUENTLY AS REQUIRED.

8. PAVED SURFACES ADJACENT TO CONSTRUCTION SITE VEHICLE ACCESS SHALL BE SWEPT AND/OR SCRAPED TO REMOVE ACCUMULATED SOIL, DIRT AND/OR DUST AFTER THE END OF EACH WORK DAY AND AS REQUESTED BY THE JURISDICTIONAL AUTHORITIES.

9. INLET PROTECTION SHALL BE IMMEDIATELY FITTED AT THE INLET OF ALL INSTALLED STORM SEWER AND SILT FENCE SHALL BE IMMEDIATELY FITTED AT ALL INSTALLED CULVERT INLETS TO PREVENT SEDIMENT DEPOSITION WITHIN STORM SEWER SYSTEMS.

10. INSTALL EROSION CONTROLS ON THE DOWNSTREAM SIDE OF STOCKPILES. IF STOCKPILE REMAINS UNDISTURBED FOR MORE THAN SEVEN (7) DAYS, TEMPORARY SEEDING AND STABILIZATION IN ACCORDANCE WITH BEST MANAGEMENT PRACTICES IS REQUIRED. IF DISTURBANCE OCCURS BETWEEN NOVEMBER 15TH AND MAY 15TH, THE MULCHING SHALL BE PERFORMED BY HYDRO-MULCHING WITH A "TACKIFIER."

11. DITCH CHECKS AND APPLICABLE EROSION NETTING/MATTING SHALL BE INSTALLED IMMEDIATELY AFTER COMPLETION OF GRADING EFFORTS WITHIN DITCHES/SWALES TO PREVENT SOIL TRANSPORTATION.

12. EROSION CONTROL FOR UTILITY CONSTRUCTION (STORM SEWER, SANITARY SEWER, WATER MAIN, ETC.):
    - A. PLACE EXCAVATED TRENCH MATERIAL ON THE HIGH SIDE OF THE TRENCH.
    - B. BACKFILL, COMPACT, AND STABILIZE THE TRENCH IMMEDIATELY AFTER PIPE CONSTRUCTION.
    - C. DISCHARGE TRENCH WATER INTO A SEDIMENTATION BASIN OR FILTERING TANK IN ACCORDANCE WITH THE WDNR DEWATERING TECHNICAL STANDARD NO. 1061 PRIOR TO RELEASE INTO THE STORM SEWER, RECEIVING STREAM, OR DRAINAGE DITCH.

13. ALL SLOPES 4:1 OR GREATER SHALL BE STABILIZED WITH CLASS I, TYPE B EROSION MATTING PER STATE HIGHWAY SPECIFICATIONS OR APPLICATION OF A WISDOT APPROVED POLYMER SOIL STABILIZATION TREATMENT OR A COMBINATION THEREOF, AS REQUIRED WITHIN 7 DAYS OF REACHING FINAL GRADE AND/OR AS SOON AS CONDITIONS ALLOW. DRAINAGE SWALES SHALL BE STABILIZED WITH CLASS I, TYPE B EROSION MATTING PER STATE HIGHWAY SPECIFICATIONS. EROSION MATTING AND/OR NETTING USED ONSITE SHALL BE INSTALLED IN ACCORDANCE WITH MANUFACTURER'S GUIDELINES AND WDNR TECHNICAL STANDARDS 1052 AND 1053.

14. CONTRACTOR SHALL TAKE ALL NECESSARY STEPS TO CONTROL DUST ARISING FROM CONSTRUCTION OPERATIONS. REFER TO WDNR TECHNICAL STANDARD 1068.

15. EROSION CONTROL MEASURES SHALL NOT BE REMOVED UNTIL ALL LAND DISTURBING CONSTRUCTION ACTIVITY AT THE SITE HAS BEEN COMPLETED AND THAT A UNIFORM PERENNIAL VEGETATIVE COVER HAS BEEN ESTABLISHED WITH A CONTIGUOUS DENSITY OF AT LEAST 70% FOR UNPAVED AREAS AND AREAS NOT COVERED BY PERMANENT STRUCTURES OR THAT EMPLOY EQUIVALENT PERMANENT STABILIZATION MEASURES.

16. CONTRACTOR/OWNER SHALL FILE A NOTICE OF TERMINATION UPON COMPLETION OF THE PROJECT IN ACCORDANCE WITH WDNR REQUIREMENTS AND/OR REQUEST FOR PERMIT CLOSURE IN ACCORDANCE WITH JURISDICTION PERMIT AND SPECIFICATION REQUIREMENTS.

17. <u>STABILIZATION PRACTICES</u> - STABILIZATION MEASURES SHALL BE INITIATED AS SOON AS PRACTICABLE IN PORTIONS OF THE SITE WHERE CONSTRUCTION ACTIVITIES HAVE TEMPORARILY OR PERMANENTLY CEASED. NO MORE THAN SEVEN (7) DAYS SHALL PASS AFTER THE CONSTRUCTION ACTIVITY IN THAT PORTION OF THE SITE HAS CEASED UNLESS:
    - 17.1. THE INITIATION STABILIZATION MEASURES BY THE SEVENTH (7) DAY AFTER CONSTRUCTION ACTIVITY HAS CEASED OR IS PRECLUDED BY SNOW COVER. IN THAT EVENT, STABILIZATION SHALL BE INITIATED AS SOON AS PRACTICABLE.
    - 17.2. CONSTRUCTION ACTIVITY WILL RESUME ON A PORTION OF THE SITE WITHIN FOURTEEN (14) DAYS FROM WHEN ACTIVITY CEASED, *[I.E. THE TOTAL TIME PERIOD THAT THE CONSTRUCTION ACTIVITY IS TEMPORARILY CEASED IS LESS THAN FOURTEEN (14) DAYS.]* IN THAT EVENT, STABILIZATION MEASURES DO NOT HAVE TO BE INITIATED ON THAT PORTION OF THE SITE BY THE SEVENTH (7) DAY AFTER CONSTRUCTION ACTIVITY HAS TEMPORARILY CEASED.
    - 17.3. STABILIZATION MEASURES SHALL BE DETERMINED BASED ON SITE CONDITIONS AT THE TIME OF WHEN CONSTRUCTION ACTIVITY HAS CEASED, INCLUDING BUT NOT LIMITED TO WEATHER CONDITIONS AND LENGTH OF TIME MEASURE MUST BE EFFECTIVE. THE FOLLOWING ARE ACCEPTABLE STABILIZATION MEASURES:
        - PERMANENT SEEDING; IN ACCORDANCE WITH APPROVED CONSTRUCTION SPECIFICATION
        - TEMPORARY SEEDING; MAY CONSIST OF SPRING OATS(100LBS/ACRE) IN SPRING/SUMMER OR WHEAT OR CEREAL RYE (150LB/ACRE) IN FALL.
        - HYDRO-MULCHING WITH A TACKIFIER
        - WOVEN AND NON-WOVEN GEOTEXTILES
        - EROSION MATTING
        - SODDING
        - OTHER MEASURES AS APPROVED BY THE ENGINEER

DIGGERS HOTLINE
Toll Free (800) 242-8511

JSD
CREATE THE VISION TELL THE STORY
jsdinc.com
MADISON REGIONAL OFFICE
507 WEST VERONA AVENUE, SUITE 500
VERONA, WISCONSIN 53593
P. 608.848.5060

CLIENT:

Wold
WOLD ARCHITECTS AND ENGINEERS
332 Minnesota Street, Suite W2000
Saint Paul, MN 55101
woldae.com | 651 227 7773

PROJECT:
PUBLIC SAFETY COMMUNICATIONS PUBLIC IMPROVEMENTS

PROJECT LOCATION:
8301 LUDS LANE
MADISON, DANE COUNTY
WI, 53558

PLAN MODIFICATIONS:

#	Date:	Description:
1	02.09.2024	CITY SUBMITTAL
2	03.21.2024	CITY RE-SUBMITTAL
3	06.20.2024	CITY RE-SUBMITTAL
4	09.19.2024	ISSUED FOR CONSTRUCTION
5		
6		
7		
8		
9		
10		
11		
12		
13		
14		
15		

Designed By:	MSS
Reviewed By:	ACG
Approved By:	MSS

SHEET TITLE:
NOTES & SPECIFICATIONS

SHEET NUMBER:
ST-1

JSD PROJECT NO: 22-11600

THESE PLANS AND DESIGNS ARE COPYRIGHT PROTECTED AND MAY NOT BE USED IN WHOLE OR IN PART WITHOUT THE WRITTEN CONSENT OF JSD PROFESSIONAL SERVICES, INC.

File: \\JSDINC\projects\2022\221600\DWG\Civil Sheets\221600 Con Docs PUB.dwg Layout: ST-1 Notes User: matt.saunders Plotted: Sep 18, 2024 - 4:08pm Xrefs:

SEEDING AND RESTORATION NOTES

1. ALL PROPOSED GRADES SHOWN ARE FINISHED GRADES. CONTRACTOR SHALL VERIFY ALL GRADES, MAKE SURE ALL AREAS DRAIN PROPERLY AND SHALL REPORT ANY DISCREPANCIES TO THE ENGINEER PRIOR TO CONSTRUCTION.

2. CONTRACTOR SHALL ASSUME SOLE RESPONSIBILITY FOR COMPUTATIONS OF ALL GRADING QUANTITIES. WHILE JSD PROFESSIONAL SERVICES, INC. ATTEMPTS TO PROVIDE A COST EFFECTIVE APPROACH TO BALANCE EARTHWORK, GRADING DESIGN IS BASED ON MANY FACTORS, INCLUDING SAFETY, AESTHETICS, AND COMMON ENGINEERING STANDARDS OF CARE. THEREFORE, NO GUARANTEE CAN BE MADE FOR A BALANCED SITE.

3. ANY WORK WITHIN RIGHT-OF-WAY SHALL BE PROPERLY PERMITTED AND COORDINATED WITH THE APPROPRIATE OFFICIALS PRIOR TO COMMENCEMENT OF ANY CONSTRUCTION ACTIVITIES. ALL GRADING WITHIN RIGHT-OF-WAY IS SUBJECT TO APPROVAL BY SAID OFFICIALS.

4. CONTRACTOR SHALL PROVIDE NOTICE TO THE JURISDICTIONAL AUTHORITIES IN ADVANCE OF ANY SOIL DISTURBING ACTIVITIES, IN ACCORDANCE WITH MUNICIPAL REQUIREMENTS.

5. ALL DISTURBED AREAS SHALL BE SODDED AND/OR SEEDED AND MULCHED IMMEDIATELY FOLLOWING GRADING ACTIVITIES PER CITY OF MADISON SPECIFICATIONS.

6. CONTRACTOR SHALL WATER ALL NEWLY SODDED/SEEDED AREAS DURING THE SUMMER MONTHS WHENEVER THERE IS A 7 DAY LAPSE WITH NO SIGNIFICANT RAINFALL.

7. CONTRACTOR TO DEEP TILL ALL COMPACTED PERVIOUS SURFACES PRIOR TO SODDING AND/OR SEEDING AND MULCHING.

8. ALL SLOPES 20% OR GREATER SHALL BE TEMPORARY SEEDED, MULCHED, OR OTHER MEANS OF COVER PLACED ON THEM WITHIN 2 WEEKS OF DISTURBANCE.

9. ALL EXPOSED SOIL AREAS THAT WILL NOT BE BROUGHT TO FINAL GRADE OR ON WHICH LAND DISTURBING ACTIVITIES WILL NOT BE PERFORMED FOR A PERIOD GREATER THAN 14 DAYS AND REQUIRE VEGETATIVE COVER FOR LESS THAN 1 YEAR, REQUIRE TEMPORARY SEEDING FOR EROSION CONTROL. SEEDING FOR EROSION CONTROL SHALL BE IN ACCORDANCE WITH WDNR TECHNICAL STANDARD 1059 AND CITY OF MADISON STANDARD SPECIFICATIONS.

UTILITY NOTES

1. ALL EXISTING UTILITIES ARE SHOWN FOR INFORMATIONAL PURPOSES ONLY AND ARE NOT GUARANTEED TO BE ACCURATE OR ALL INCLUSIVE. THE CONTRACTOR IS RESPONSIBLE FOR MAKING HIS OWN DETERMINATION AS TO THE TYPE AND LOCATIONS OF UNDERGROUND UTILITIES AS MAY BE NECESSARY TO AVOID DAMAGE THERETO. CONTRACTOR/OWNER SHALL CALL "DIGGER'S HOTLINE" PRIOR TO ANY CONSTRUCTION.

2. PRIOR TO CONSTRUCTION, THE PRIME CONTRACTOR IS RESPONSIBLE FOR:
   - EXAMINING ALL SITE CONDITIONS RELATIVE TO THE CONDITIONS INDICATED ON THE ENGINEERING DRAWINGS. ANY DISCREPANCIES ARE TO BE REPORTED TO THE ENGINEER AND RESOLVED PRIOR TO THE START OF CONSTRUCTION.
   - OBTAINING ALL PERMITS INCLUDING PERMIT COSTS, TAP FEES, METER DEPOSITS, BONDS, AND ALL OTHER FEES REQUIRED FOR PROPOSED WORK TO OBTAIN OCCUPANCY.
   - VERIFYING ALL ELEVATIONS, LOCATIONS AND SIZES OF SANITARY, WATER AND STORM LATERALS AND CHECK ALL UTILITY CROSSINGS FOR CONFLICTS. NOTIFY ENGINEER OF ANY DISCREPANCY. NO WORK SHALL BE PERFORMED UNTIL THE DISCREPANCY IS RESOLVED.
   - NOTIFYING ALL UTILITIES PRIOR TO INSTALLATION OF ANY UNDERGROUND IMPROVEMENTS.
   - NOTIFYING THE DESIGN ENGINEER AND JURISDICTIONAL AUTHORITY 48 HOURS PRIOR TO THE START OF CONSTRUCTION TO ARRANGE FOR APPROPRIATE CONSTRUCTION OBSERVATION.
   - COORDINATING ALL CONSTRUCTION WITH OTHER CONTRACTORS INVOLVED WITH CONSTRUCTION OF THE PROPOSED DEVELOPMENT AND FOR REPORTING ANY ERRORS OR DISCREPANCIES BETWEEN THESE PLANS AND PLANS PREPARED BY OTHERS.

3. ALL UTILITY WORK SHALL BE DONE IN ACCORDANCE WITH THE STANDARD SPECIFICATIONS FOR PUBLIC UTILITIES AND STATE DSPS/SPS AND LOCAL CODES AND SPECIFICATIONS. IT IS THE CONTRACTORS RESPONSIBILITY TO DETERMINE WHICH SPECIFICATIONS AND CODES APPLY, AND TO COORDINATE ALL CONSTRUCTION ACTIVITIES WITH THE APPROPRIATE JURISDICTIONAL AUTHORITIES.

4. SPECIFICATIONS SHALL COMPLY WITH THE JURISDICTIONAL AUTHORITY'S SPECIAL PROVISIONS.

5. LENGTHS OF ALL UTILITIES ARE TO CENTER OF STRUCTURES OR FITTINGS AND MAY VARY SLIGHTLY FROM PLAN. LENGTHS SHALL BE VERIFIED IN THE FIELD DURING CONSTRUCTION.

6. CONTRACTOR SHALL BE RESPONSIBLE FOR SITE SAFETY DURING THE CONSTRUCTION OF IMPROVEMENTS.

7. CONTRACTOR SHALL INSTALL A PEDESTRIAN FENCE AROUND ALL EXCAVATIONS TO BE LEFT OPEN OVER NIGHT AS REQUIRED IN CONSTRUCTION SITES WHERE THE POTENTIAL FOR PEDESTRIAN INJURY EXISTS.

8. CONTRACTOR SHALL ADJUST AND/OR RECONSTRUCT ALL UTILITY COVERS (SUCH AS MANHOLE COVERS, VALVE BOX COVERS, ETC.) TO MATCH THE FINISHED GRADES OF THE AREAS EFFECTED BY THE CONSTRUCTION.

9. THE PRIME CONTRACTOR SHALL BE RESPONSIBLE FOR COORDINATING ALL CONSTRUCTION WITH OTHER CONTRACTORS INVOLVED WITH CONSTRUCTION OF THE PROPOSED DEVELOPMENT AND FOR REPORTING ANY ERRORS OR DISCREPANCIES BETWEEN THESE PLANS AND PLANS PREPARED BY OTHERS.

10. ANY SANITARY SEWER, SANITARY SEWER SERVICES, WATER MAIN, WATER SERVICES, STORM SEWER, OR OTHER UTILITIES, WHICH ARE DAMAGED BY THE CONTRACTORS, SHALL BE REPAIRED TO THE JURISDICTIONAL AUTHORITY'S SATISFACTION AT THE CONTRACTOR'S EXPENSE.

11. THE CONTRACTOR IS RESPONSIBLE FOR PROVIDING THE ENGINEER WITH AS-BUILT CONDITIONS OF THE INSTALLED IMPROVEMENTS IN ORDER THAT THE APPROPRIATE DRAWINGS CAN BE PREPARED, IF REQUIRED. ANY CHANGES TO THE DRAWINGS OR ADDITIONAL ITEMS MUST BE REPORTED TO THE ENGINEER AS WORK PROGRESSES.

CONSTRUCTION SITE DEWATERING NOTES

1. ALL CONSTRUCTION SITE DEWATERING PRACTICES SHALL BE IN ACCORDANCE WITH WDNR TECHNICAL STANDARD 1061 FOR PUMPING DISCHARGE RATES OF LESS THAN 70 GPM. CONTRACTOR SHALL BE RESPONSIBLE FOR APPLICABLE JURISDICTIONAL DEWATERING PERMITS. FOR DISCHARGE RATES EXCEEDING 70 GPM, CONTRACTOR SHALL BE RESPONSIBLE FOR PERMITTING OF DEWATERING SYSTEM AS A HIGH CAPACITY DEWATERING WELL WITH WDNR AND LOCAL JURISDICTIONS.

2. CONTRACTOR SHALL DISCHARGE TREATED EFFLUENT FROM DEWATERING SYSTEM TO LOCATIONS IN ACCORDANCE WITH WDNR TECHINCAL STANDARD 1061. CONTRACTOR SHALL OBTAIN APPROVAL FROM LOCAL JURISDICTION OR ADJACENT PRIVATE PROPERTY OWNERS FOR ALL DISCHARGES TO JURISDICTION'S PUBLIC INFRASTRUCTURE OR PRIVATE PROPERTY.

3. IN THE EVENT OF DIRTY/UNCLEAR DISCHARGE, CONTRACTOR SHALL HALT PUMPING OPERATIONS AND EVALUATE THE DEWATERING TREATMENT/FILTERING SYSTEM.

STORMWATER FACILITIES CONSTRUCTION NOTES

1. ENGINEER SHALL BE NOTIFIED PRIOR TO INSTALLATION OF STORMWATER MANAGEMENT FACILITIES. CONSTRUCTION OF STORMWATER MANAGEMENT FACILITIES SHALL BE OBSERVED AND DOCUMENTED BY THE ENGINEER, OR AN OWNER'S REPRESENTATIVE.

2. STORMWATER MANAGEMENT FACILITIES SHALL BE INSTALLED AFTER SUBSTANTIAL COMPLETION OF FINAL SITE GRADING AND SOILS HAVE BEEN STABILIZED.

3. AREAS USED FOR TEMPORARY SEDIMENT BASINS SHALL BE REMOVED IN THEIR ENTIRETY AFTER CONSTRUCTION OF STORMWATER MANAGEMENT FACILITIES.

4. THE STORMWATER MANAGEMENT FEATURES CONTAINED WITHIN THIS PLAN SET HAVE BEEN DESIGNED IN ACCORDANCE WITH APPLICABLE STANDARDS SET FORTH IN WISCONSIN DNR NR151 AND LOCAL ORDINANCES. IT IS THE CONTRACTOR'S RESPONSIBILITY TO ENSURE PROPER CONSTRUCTION PRACTICES HAVE BEEN UTILIZED AND THAT STORMWATER MANAGEMENT FEATURES HAVE BEEN CONSTRUCTED IN ACCORDANCE WITH APPROVED DESIGN PLANS. JSD PROFESSIONAL SERVICES, INC. (JSD) SHALL NOT BE LIABLE FOR ANY CONSTRUCTION PRACTICES OR INSTALLATION WHICH DEVIATES FROM THE APPROVED PLAN SET. ONCE THE OWNER HAS PROVIDED FINAL APPROVAL TO THE WORK PERFORMED BY THE CONTRACTOR AND ENSURED COMPLIANCE WITH THE PLAN, IT IS THE OWNER'S RESPONSIBILITY TO MAINTAIN STORMWATER MANAGEMENT FEATURES IN ACCORDANCE WITH THE RECORDED MAINTENANCE AGREEMENT. PROPER OPERATION IS DEPENDENT ON A MULTITUDE OF VARIABLES INCLUDING WEATHER. THESE COMPONENTS REQUIRE ONGOING MAINTENANCE FOR WHICH THE OWNER IS RESPONSIBLE. JSD TAKES NO RESPONSIBILITY FOR PROPER OPERATION OF THE WATER QUALITY COMPONENTS.

LEGEND

	PROPERTY LINE	959	EXISTING 1 FOOT CONTOUR		EROSION MATTING, CLASS I TYPE B		INLET PROTECTION
	RIGHT-OF-WAY	960	EXISTING 5 FOOT CONTOUR		EROSION MATTING, URBAN TYPE A		
	EASEMENT LINE	D D	STORM SEWER	FG:887.63	SPOT ELEVATION, FINISH GRADE		
959	PROPOSED 1 FOOT CONTOUR	SF SF SF SF	SILT FENCE				
960	PROPOSED 5 FOOT CONTOUR		RIP-RAP		SILT SOCK DITCH CHECK		

DIGGERS HOTLINE
Toll Free (800) 242-8511

JSD
CREATE THE VISION TELL THE STORY
jsdinc.com
MADISON REGIONAL OFFICE
507 WEST VERONA AVENUE, SUITE 500
VERONA, WISCONSIN 53593
P. 608.848.5060

CLIENT:

Wold
WOLD ARCHITECTS AND ENGINEERS
332 Minnesota Street, Suite W2800
Saint Paul, MN 55101
woldae.com | 651 227 7773

PROJECT:
PUBLIC SAFETY COMMUNICATIONS PUBLIC IMPROVEMENTS

PROJECT LOCATION:
8301 LUDS LANE
MADISON, DANE COUNTY
WI, 53558

PLAN MODIFICATIONS:

#	Date:	Description:
1	02.09.2024	CITY SUBMITTAL
2	03.21.2024	CITY RE-SUBMITTAL
3	06.20.2024	CITY RE-SUBMITTAL
4	09.19.2024	ISSUED FOR CONSTRUCTION
5		
6		
7		
8		
9		
10		
11		
12		
13		
14		
15		

Designed By:	MSS
Reviewed By:	ACG
Approved By:	MSS

SHEET TITLE:
NOTES & SPECIFICATIONS

SHEET NUMBER:
ST-2

JSD PROJECT NO: 22-11600

THESE PLANS AND DESIGNS ARE COPYRIGHT PROTECTED AND MAY NOT BE USED IN WHOLE OR IN PART WITHOUT THE WRITTEN CONSENT OF JSD PROFESSIONAL SERVICES, INC.

File: \\JSDINC\projects\2022\221600\DWG\Civil Sheets\221600 Con Docs PUB.dwg Layout: ST-2 Notes User: matt.saunders Plotted: Sep 18, 2024 - 4:15pm Xrefs:

DETAIL ABBREVIATIONS

HWL - HIGH WATER LEVEL
NWL - NORMAL WATER LEVEL
ELEV - ELEVATION
MIN - MINIMUM
TYP - TYPICAL
INV - INVERT

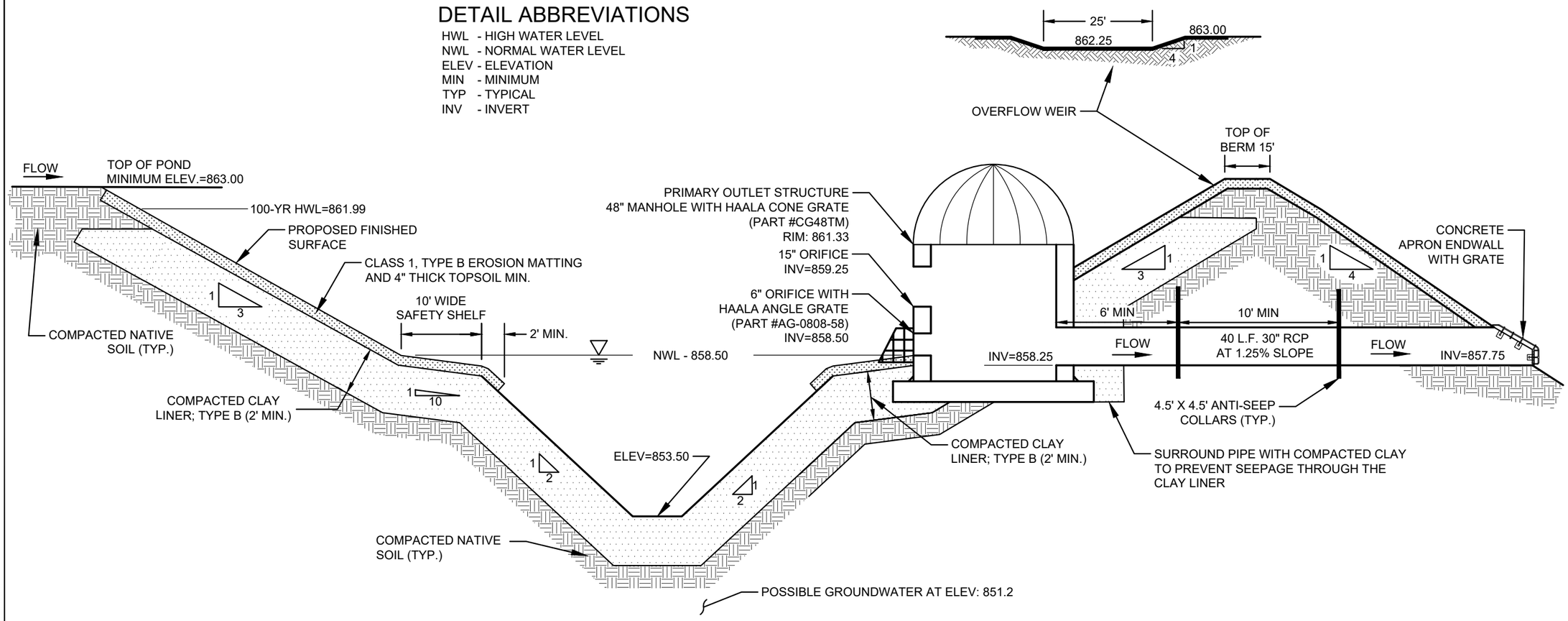

WET BASIN NOTES & SPECIFICATIONS

1. ALL CONSTRUCTION SHALL MEET THE SPECIFICATIONS OF "WDNR WET DETENTION BASIN. TECHNICAL STANDARD 1001". IT IS THE CONTRACTOR'S RESPONSIBILITY TO OBTAIN A COPY OF THIS STANDARD AND CONSTRUCT THE BASIN IN ACCORDANCE WITH THE REQUIREMENTS OUTLINED THEREIN.

2. ALL WORK TO BE CONDUCTED IN CONFORMANCE WITH THE STORM WATER MANAGEMENT PLAN FOR THE PROJECT SITE AS APPROVED BY THE REGULATORY ENGINEER OF RECORD.

3. RCP PIPING & INSTALLATION WITHIN THE BASIN SHALL BE IN ACCORDANCE WITH (ASTM C-76/C443) WITH RUBBER GASKETS.

4. REFER TO SEEDING SPECIFICATIONS ON SHEET ST-4 FOR SEED MIX AND SEEDING RATES FOR BASIN SIDES SLOPES.

5. CLAY LINER SHALL BE A MINIMUM OF 2-FEET THICK. CLAY SHALL BE COMPACTED AT ±2.0% OPTIMAL MOISTURE CONTENT TO 90% MODIFIED PROCTOR. MEDIUM STIFF TO STIFF CLAYS PRESENT IN-PLACE AT THE POND SIDE SLOPES OR BOTTOM OR OTHER ONSITE MEDIUM STIFF TO STIFF CLAYS MAY BE USED AT THE DISCRETION OF THE GEOTECHNICAL ENGINEER OF RECORD. CLAY LINER TO MEET CRITERIA FOR TYPE B CLAY LINER PER DNR TECHNICAL STANDARD 1001.
   5.1. GEOTECHNICAL ENGINEER TO PROVIDE FINAL SOIL REPORT OF CLAY LINER TO ENGINEER FOR AS-BUILT CERTIFICATION.

6. FOR CONSTRUCTED EMBANKMENTS WHERE THE PERMANENT POOL IS PONDED 3-FEET OR MORE AGAINST THE EMBANKMENT, THERE SHALL BE A CORE TRENCH OR KEYWAY ALONG THE CENTERLINE OF THE EMBANKMENT UP TO THE PERMANENT POOL ELEVATION. THE CORE TRENCH OR KEYWAY SHALL BE A MINIMUM OF 2-FEET DEEP AND 8-FEET WIDE WITH A SIDE SLOPE OF 1:1 OR FLATTER.

7. CONTRACTOR SHALL POSITION ANTI-SEEP COLLAR SUCH THAT THE COLLARS ARE COMPLETELY CONTAINED WITHIN EMBANKMENT.

8. IMMEDIATELY INSTALL FILTER FABRIC OVER ALL OUTLETS TO PREVENT SEDIMENT DEPOSITION IN THE PIPING (REMOVE FOLLOWING CONTRIBUTING AREA STABILIZATION).

9. THE CONTRACTOR IS REQUIRED TO PROVIDE QUALIFIED STAFF FOR INSPECTION AND OBSERVATION OF THE CONSTRUCTION ACTIVITIES RELATING TO ALL JOB SITE REGULATORY COMPLIANCE INCLUDING THE PROTECTION AND CONSTRUCTION OF ALL STORMWATER MANAGEMENT FEATURES. ANY OBSERVATION OF PLAN OR SITE DISCREPANCIES SHALL BE REPORTED TO THE ENGINEER OF RECORD PRIOR TO CONSTRUCTION.

10. UPON CONSTRUCTION COMPLETION AND STABILIZATION, AN AS-BUILT SURVEY IS TO BE CONDUCTED FOR BASIN AND CERTIFIED BY THE ISSUING ENGINEER. AS-BUILT PLANS ARE TO BE SUBMITTED TO MUNICIPALITY FOR FINAL APPROVAL.
    10.1. CONTRACTOR TO PROVIDE CONSTRUCTION PHOTOS THROUGHT CONSTRUCTION
    10.2. RECOMEND THE BASIN SIZE AND ELEVATIONS VERIFIED PRIOR TO THE CLAY LINER BEING INSTALLED AND AFTER THE LINER IS INSTALLED TO VERIFY PRIOR TO FINAL STABLIZATION

WET BASIN DETAIL

N.T.S.

DIGGERS HOTLINE
Toll Free (800) 242-8511

JSD
CREATE THE VISION TELL THE STORY
jsdinc.com
MADISON REGIONAL OFFICE
507 WEST VERONA AVENUE, SUITE 500
VERONA, WISCONSIN 53593
P. 608.848.5060

CLIENT:

Wold
WOLD ARCHITECTS AND ENGINEERS
332 Minnesota Street, Suite W2800
Saint Paul, MN 55101
woldae.com | 651 227 7773

PROJECT:
PUBLIC SAFETY COMMUNICATIONS PUBLIC IMPROVEMENTS

PROJECT LOCATION:
8301 LUDS LANE
MADISON, DANE COUNTY
WI, 53558

PLAN MODIFICATIONS:

#	Date:	Description:
1	02.09.2024	CITY SUBMITTAL
2	03.21.2024	CITY RE-SUBMITTAL
3	06.20.2024	CITY RE-SUBMITTAL
4	09.19.2024	ISSUED FOR CONSTRUCTION
5		
6		
7		
8		
9		
10		
11		
12		
13		
14		
15		

Designed By:	MSS
Reviewed By:	ACG
Approved By:	MSS

SHEET TITLE:
WET BASIN DETAILS & SPECIFICATIONS

SHEET NUMBER:
ST-3

JSD PROJECT NO: 22-11600

THESE PLANS AND DESIGNS ARE COPYRIGHT PROTECTED AND MAY NOT BE USED IN WHOLE OR IN PART WITHOUT THE WRITTEN CONSENT OF JSD PROFESSIONAL SERVICES, INC.

File: \\JSDINC\projects\2022\221600\DWG\Civil Sheets\221600 Con Docs PUB.dwg Layout: ST-3 POND DETAILS User: mattsaunders Plotted: Sep 20, 2024 - 11:17am Xref's:

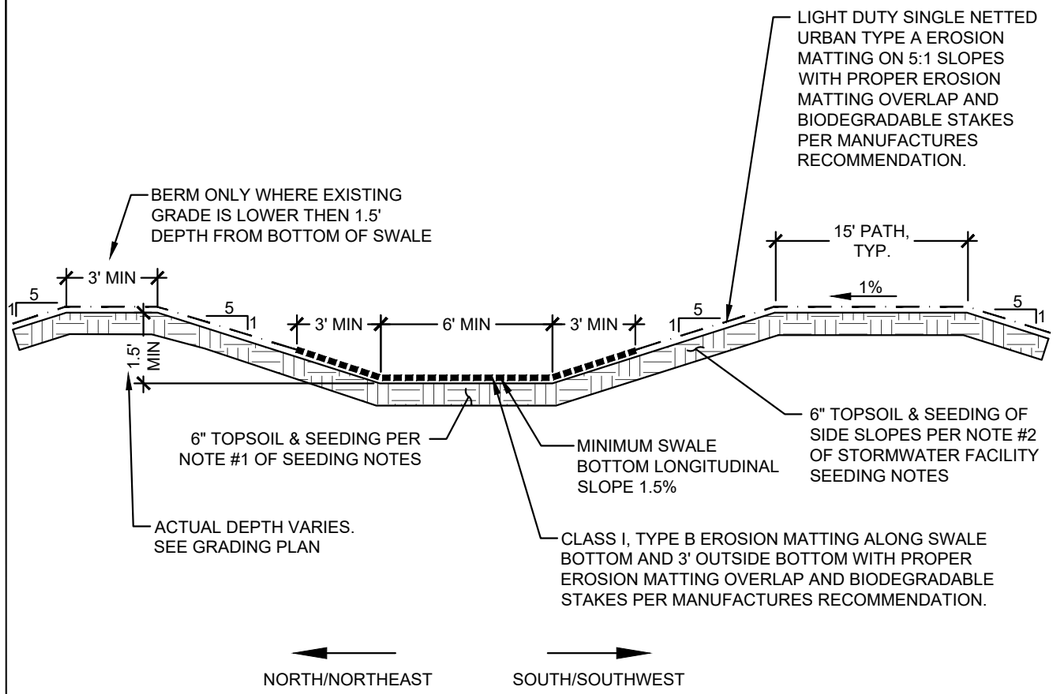

PRIMARY DRAINAGE SWALE CROSS SECTION

N.T.S.

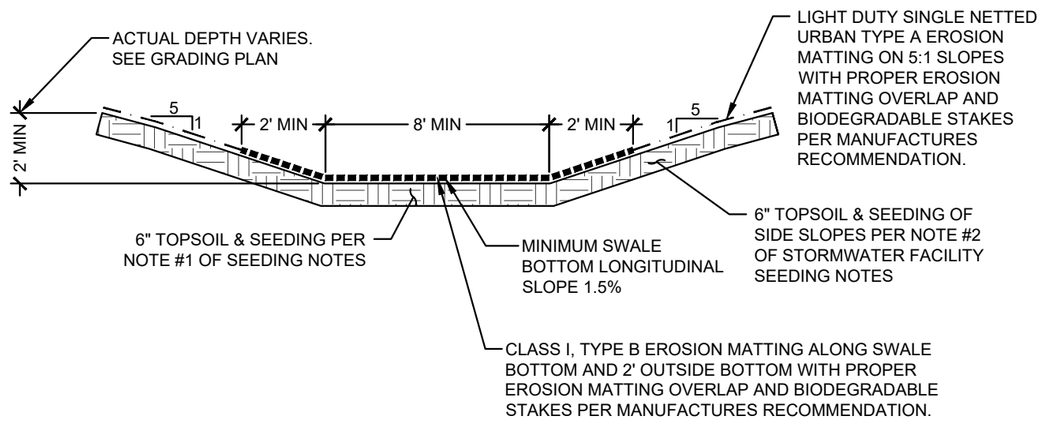

BYPASS DRAINAGE SWALE CROSS SECTION

N.T.S.

SEEDING NOTES

1. SWALE BOTTOM SEED MIX: THE SEED MIX SHALL CONSIST OF ANY OF THE FOLLOWING OR APPROVED EQUAL:
   - 1.1. "DETENTION BASIN SEED MIX" AS MANUFACTURED BY PRAIRIE NURSERY, WESTFIELD, WI. SEED SHALL BE PLACED AT A RATE OF 10 LBS PER ACRE.
   - 1.2. "DETENTION BASIN SEED MIX" AS MANUFACTURED BY PRAIRIE MOON NURSERY, WINONA, MN. SEED SHALL BE PLACED AT A RATE OF 9.44 LBS PER ACRE.
   - 1.3. "RAINWATER RENEWAL MIX" AS MANUFACTURED BY AGRECOL LLC, EVANSVILLE, WI. SEED SHALL BE PLACED AT A RATE OF 8 LBS PER ACRE.
   - 1.4. "DETENTION BASIN & RAINGARDEN MIX" AS MANUFACTURED BY SHOOTING STAR NATIVE SEED, SPRING GROVE, MN. SEED SHALL BE PLACED AT A RATE OF 8 LBS PER ACRE.

2. WET BASIN SEED MIX: INTERIOR BASIN SLOPES FROM ELEVATION 856.5 TO 863.0 TO BE BROADCAST SEEDED WITH "WET PRAIRIE MIX", AS PROVIDED BY AGRECOL.
   - 2.1. AGRECOL - NATIVE SEED & PLANT NURSERY, P.O. BOX 306, WESTFIELD, WISCONSIN, 53964, TEL. 608-296-3679 (OR APPROVED EQUIVALENT).
   - 2.2. INSTALL SEED WITH SUPPLEMENTAL MATERIALS AND AMENDMENTS AS RECOMMENDED BY SEED SUPPLIER AND AT RATES AND OPTIMUM TIMES OF THE YEAR AS RECOMMENDED BY THE SEED SUPPLIER TO ENSURE SUCCESSFUL GERMINATION AND SEED/ROOT ZONE GROWTH DEVELOPMENT. REFER TO PRODUCT SPECIFICATIONS AND MANUFACTURERS RECOMMENDATIONS FOR INSTALLATION.

3. ALL OTHER DISTURBED AREAS SEED MIX:
   - 3.1. 85% OF THE SEED MIX SHALL CONSIST OF ANY OF THE FOLLOWING OR APPROVED EQUAL:
     - 3.1.1. "TALL PRAIRIE FOR MEDIUM TO CLAY SOILS" AS MANUFACTURED BY PRAIRIE NURSERY, WESTFIELD, WI. SEED SHALL BE PLACED AT A RATE OF 10 LBS PER ACRE.
     - 3.1.2. "POLLINATOR-PALOOZA SEED MIX" AS MANUFACTURED BY PRAIRIE MOON NURSERY, WINONA, MN. SEED SHALL BE PLACED AT A RATE OF 6.59 LBS PER ACRE.
     - 3.1.3. "TALLGRASS PRAIRIE FOR MEDIUM SOILS" AS MANUFACTURED BY AGRECOL LLC, EVANSVILLE, WI. SEED SHALL BE PLACED AT A RATE OF 13.25 LBS PER ACRE.
     - 3.1.4. "BASIC PRAIRIE MIX" AS MANUFACTURED BY SHOOTING STAR NATIVE SEED, SPRING GROVE, MN. SEED SHALL BE PLACED AT A RATE OF 10 LBS PER ACRE.
   - 3.2. 15% OF THE SEED MIX SHALL CONSIST OF ANY OF THE FOLLOWING OR APPROVED EQUAL:
     - 3.2.1. "GRAND DIVERSITY PRAIRIE SEED MIX" AS MANUFACTURED BY PRAIRIE MOON NURSERY, WINONA, MN. SEED SHALL BE PLACED AT A RATE OF 13.85 LBS PER ACRE.
     - 3.2.2. "DIVERSE PRAIRIE FOR MEDIUM SOILS" AS MANUFACTURED BY PRAIRIE NURSERY, WESTFIELD, WI. SEED SHALL BE PLACED AT A RATE OF 10 LBS PER ACRE.
     - 3.2.3. "BIRD & BUTTERFLY MIX" AS MANUFACTURED BY AGRECOL LLC, EVANSVILLE, WI. SEED SHALL BE PLACED AT A RATE OF 13 LBS PER ACRE.

4. SUBSTITUTION REQUESTS SHALL BE SUBMITTED TO CITY ENGINEERING FOR REVIEW AND APPROVAL. CONTRACTOR IS NOTIFIED THAT IF AN ALTERNATIVE IS ALLOWED, THE RATE OF SEED MAY BE ALTERED AS A CONDITION OF APPROVAL, AND SEED SHALL BE NATIVE ECOTYPES. NO IMPROVED VARIETIES ARE ALLOWED. SEED SOURCE SHALL BE NATIVE ECOTYPES FROM SOUTHEASTERN MINNESOTA, EASTERN IOWA, SOUTHERN WISCONSIN OR NORTHERN ILLINOIS.

5. VEGETATION ESTABLISHMENT IN WET BASIN AND ALL OTHER DISTURBED AREAS TO BE COMPLETED BY A CONTRACTOR WITH EXPERTISE IN NATIVE VEGETATION ESTABLISHMENT.

DIGGERS HOTLINE
Toll Free (800) 242-8511

JSD
CREATE THE VISION TELL THE STORY
jsdinc.com
MADISON REGIONAL OFFICE
507 WEST VERONA AVENUE, SUITE 500
VERONA, WISCONSIN 53593
P. 608.848.5060

CLIENT:

WOLD ARCHITECTS AND ENGINEERS
332 Minnesota Street, Suite W2800
Saint Paul, MN 55101
woldae.com | 651 227 7773

PROJECT:
PUBLIC SAFETY COMMUNICATIONS PUBLIC IMPROVEMENTS

PROJECT LOCATION:
8301 LUDS LANE
MADISON, DANE COUNTY
WI, 53558

PLAN MODIFICATIONS:

#	Date:	Description:
1	02.09.2024	CITY SUBMITTAL
2	03.21.2024	CITY RE-SUBMITTAL
3	06.20.2024	CITY RE-SUBMITTAL
4	09.19.2024	ISSUED FOR CONSTRUCTION
5		
6		
7		
8		
9		
10		
11		
12		
13		
14		
15		

Designed By:	MSS
Reviewed By:	ACG
Approved By:	MSS

SHEET TITLE:
GRASSED SWALE DETAILS & SPECIFICATIONS

SHEET NUMBER:
ST-4

JSD PROJECT NO: 22-11600

THESE PLANS AND DESIGNS ARE COPYRIGHT PROTECTED AND MAY NOT BE USED IN WHOLE OR IN PART WITHOUT THE WRITTEN CONSENT OF JSD PROFESSIONAL SERVICES, INC.

File: \\JSDINC\projects\2022\221600\DWG\Civil Sheets\221600 Con Docs PUB.dwg Layout: ST-4 SWALE DETAILS User: matt.saunders Plotted: Sep 18, 2024 - 4:15pm Xrefs:

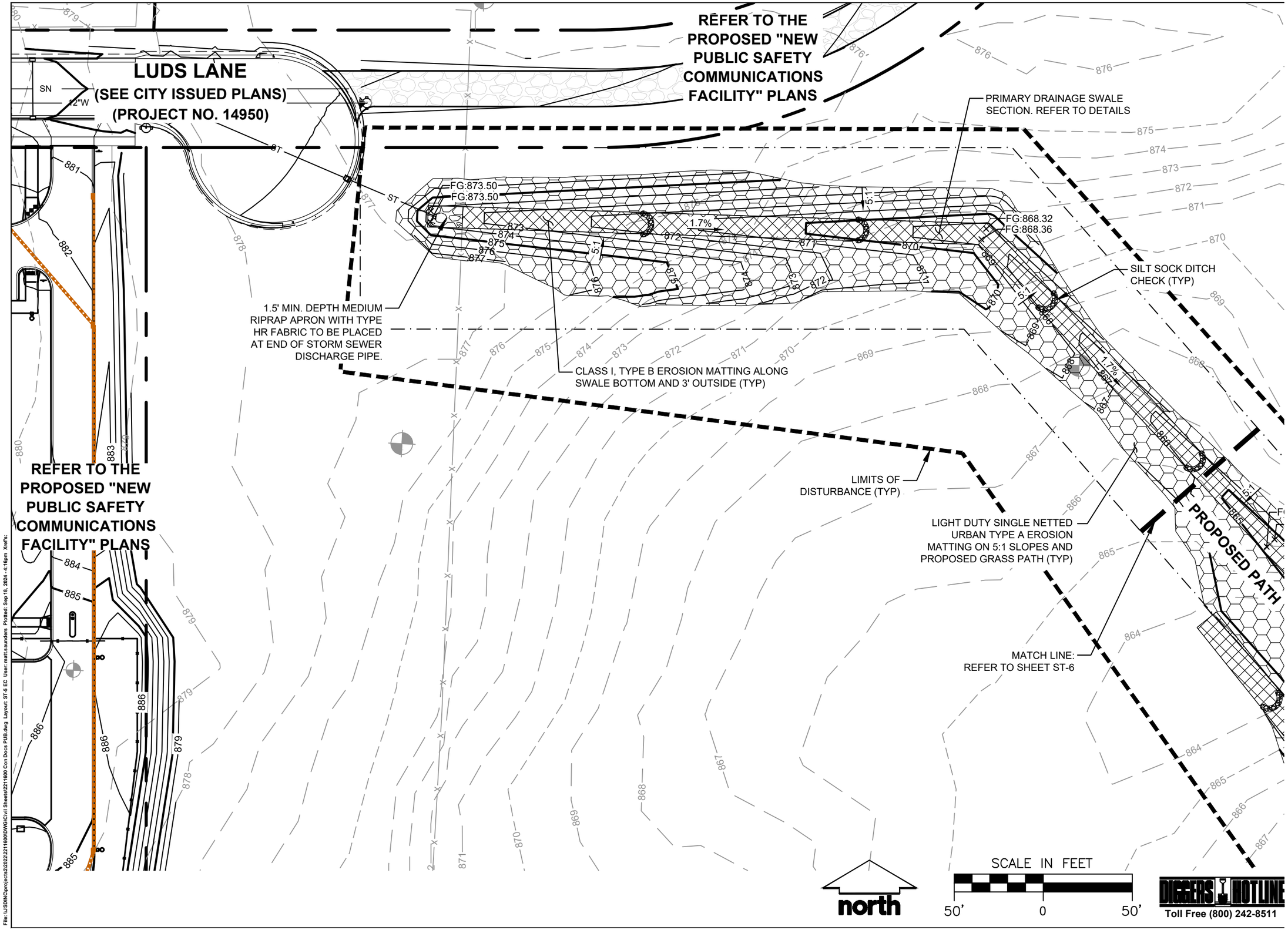

File: \\JSDINC\projects\2022\221600\DWG\Civil Sheets\221600 Con Docs PUB.dwg Layout: ST-5 EC User: matt.saunders Plotted: Sep 18, 2024 - 4:16pm Xrefs:

JSD

CREATE THE VISION TELL THE STORY

jsdinc.com

MADISON REGIONAL OFFICE
507 WEST VERONA AVENUE, SUITE 500
VERONA, WISCONSIN 53593
P. 608.848.5060

CLIENT:

Wold

WOLD ARCHITECTS AND ENGINEERS
332 Minnesota Street, Suite W2800
Saint Paul, MN 55101
woldac.com | 651 227 7773

PROJECT:
PUBLIC SAFETY COMMUNICATIONS PUBLIC IMPROVEMENTS

PROJECT LOCATION:
8301 LUDS LANE
MADISON, DANE COUNTY
WI, 53558

PLAN MODIFICATIONS:

#	Date:	Description:
1	02.09.2024	CITY SUBMITTAL
2	03.21.2024	CITY RE-SUBMITTAL
3	06.20.2024	CITY RE-SUBMITTAL
4	09.19.2024	ISSUED FOR CONSTRUCTION
5		
6		
7		
8		
9		
10		
11		
12		
13		
14		
15		

Designed By:	MSS
Reviewed By:	ACG
Approved By:	MSS

SHEET TITLE:
GRADING & EROSION CONTROL PLAN - NORTH

SHEET NUMBER:
ST-5

JSD PROJECT NO: 22-11600

THESE PLANS AND DESIGNS ARE COPYRIGHT PROTECTED AND MAY NOT BE USED IN WHOLE OR IN PART WITHOUT THE WRITTEN CONSENT OF JSD PROFESSIONAL SERVICES, INC.

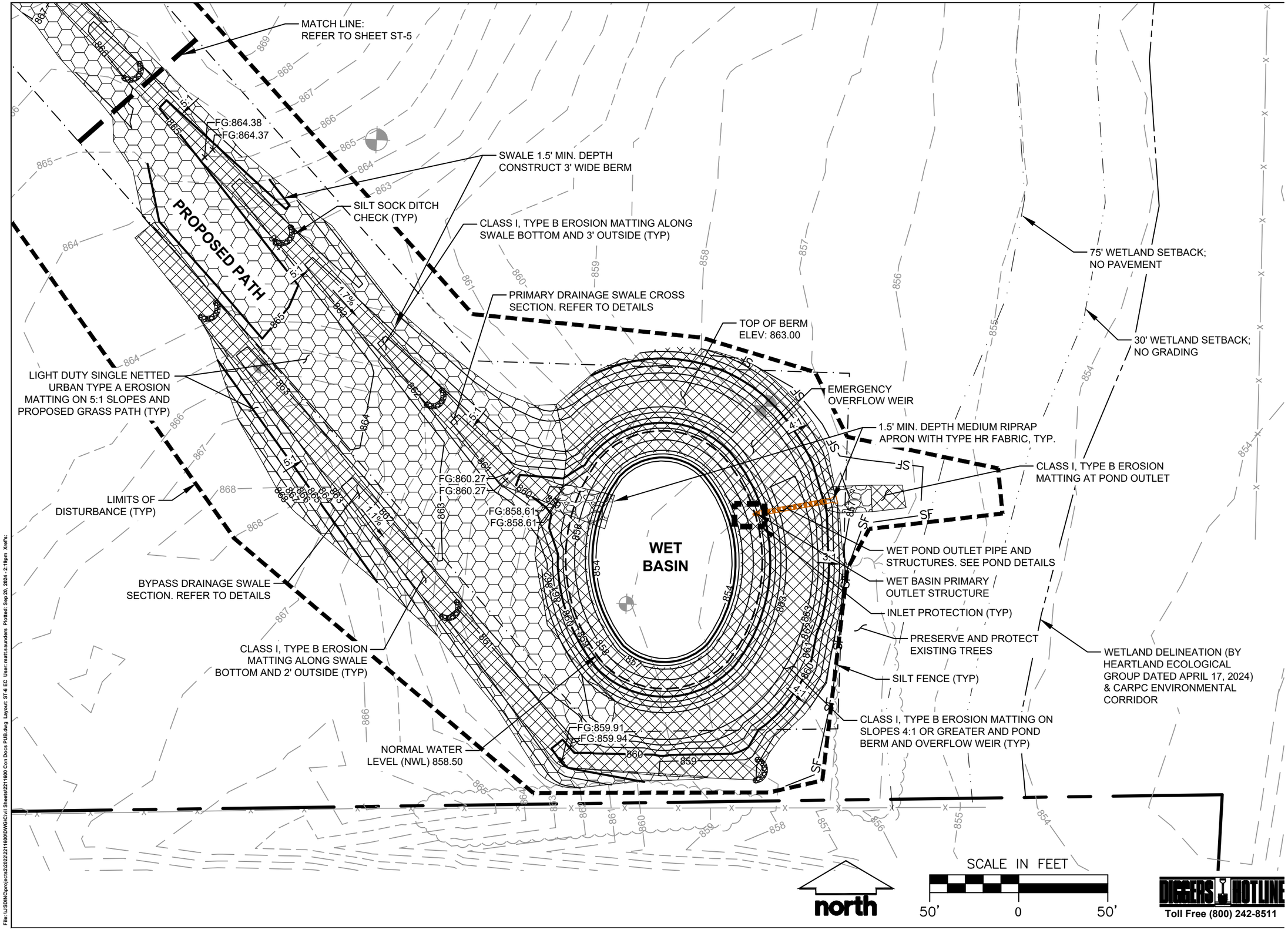

JSD

CREATE THE VISION TELL THE STORY

jsdinc.com

MADISON REGIONAL OFFICE
507 WEST VERONA AVENUE, SUITE 500
VERONA, WISCONSIN 53593
P. 608.848.5060

CLIENT:

Wold

WOLD ARCHITECTS AND ENGINEERS
332 Minnesota Street, Suite W2800
Saint Paul, MN 55101

woldae.com | 651 227 7773

PROJECT:
PUBLIC SAFETY COMMUNICATIONS PUBLIC IMPROVEMENTS

PROJECT LOCATION:
8301 LUDS LANE
MADISON, DANE COUNTY
WI, 53558

PLAN MODIFICATIONS:

#	Date:	Description:
1	02.09.2024	CITY SUBMITTAL
2	03.21.2024	CITY RE-SUBMITTAL
3	06.20.2024	CITY RE-SUBMITTAL
4	09.19.2024	ISSUED FOR CONSTRUCTION
5		
6		
7		
8		
9		
10		
11		
12		
13		
14		
15		

Designed By:	MSS
Reviewed By:	ACG
Approved By:	MSS

SHEET TITLE:
GRADING & EROSION CONTROL PLAN - SOUTH

SHEET NUMBER:
ST-6

JSD PROJECT NO: 22-11600

THESE PLANS AND DESIGNS ARE COPYRIGHT PROTECTED AND MAY NOT BE USED IN WHOLE OR IN PART WITHOUT THE WRITTEN CONSENT OF JSD PROFESSIONAL SERVICES, INC.

File: \\JSDINC\projects\2022\22211600\DWG\Civil Sheets\221600 Con Docs PUB.dwg Layout: ST-6 EC User: mattsaunders Plotted: Sep 20, 2024 - 2:19pm Xref's:

MARK	REVISION	DATE	BY
---	---	---	---
---	---	---	---
---	---	---	---
---	---	---	---

Designed By: IO
Date: 10/23/2024 5:27 AM
Scale: 1" = 20'

14950

MADISON, WI

CONTRACT NO: 9481

CROSS SECTIONS - LUDS LN

LUDS LANE AND FEMRITE DRIVE CSM

M:\DESIGN\Projects\14950\CAD\Streets\14950EN-AllProf&Corridor_Setup_IO.dwg

14950

X-1

MARK	REVISION	DATE	BY
---	---	---	---
---	---	---	---
---	---	---	---
---	---	---	---

Designed By: IO
Date: 10/23/2024 5:27 AM
Scale: 1" = 20'

14950

X-2

14950

MADISON, WI

9481

CONTRACT NO:

CROSS SECTIONS - LUDS LN

LUDS LANE AND FEMRITE DRIVE CSM

M:\DESIGN\Projects\14950\CAD\Streets\14950EN-AllProf&Corridor_Setup_IO.dwg

CITY OF MADISON WISCONSIN

14950

X-2

16+75.00

17+50.00

16+50.00

17+25.00

16+25.00

17+00.00

MARK	REVISION	DATE	BY
---	---	---	---
---	---	---	---
---	---	---	---
---	---	---	---

Designed By: IO
Date: 10/23/2024 5:27 AM
Scale: 1" = 20'

14950

MADISON, WI

9481

CONTRACT NO:

CROSS SECTIONS - LUDS LN

LUDS LANE AND FEMRITE DRIVE CSM

M:\DESIGN\Projects\14950\CAD\Streets\14950EN-AllProf&Corridor_Setup_IO.dwg

14950

X-3

18+25.00

19+00.00

18+00.00

18+75.00

17+75.00

18+50.00

MARK	REVISION	DATE	BY
---	---	---	---
---	---	---	---
---	---	---	---
---	---	---	---

Designed By: IO
Date: 10/23/2024 5:27 AM
Scale: 1" = 20'

14950

X-4

14950

MADISON, WI

CONTRACT NO: 9481

CROSS SECTIONS - LUDS LN

LUDS LANE AND FEMRITE DRIVE CSM

M:\DESIGN\Projects\14950\CAD\Streets\14950EN-AllProf&Corridor_Setup_IO.dwg

14950

X-4

19+75.00

20+50.00

19+50.00

20+25.00

19+25.00

20+00.00

MARK	REVISION	DATE	BY
---	---	---	---
---	---	---	---
---	---	---	---
---	---	---	---

Designed By: IO
Date: 10/23/2024 5:27 AM
Scale: 1" = 20'

14950

CONTRACT NO: 9481

MADISON, WI

CROSS SECTIONS - LUDS LN

LUDS LANE AND FEMRITE DRIVE CSM

M:\DESIGN\Projects\14950\CAD\Streets\14950EN-AllProf&Corridor_Setup_IO.dwg

14950

X-5

MARK	REVISION	DATE	BY
---	---	---	---
---	---	---	---
---	---	---	---
---	---	---	---

Designed By: IO
Date: 10/23/2024 5:27 AM
Scale: 1" = 20'

14950

CONTRACT NO: 9481

MADISON, WI

CROSS SECTIONS - LUDS LN

LUDS LANE AND FEMRITE DRIVE CSM

M:\DESIGN\Projects\14950\CAD\Streets\14950EN-AllProf&Corridor_Setup_IO.dwg

14950

X-6

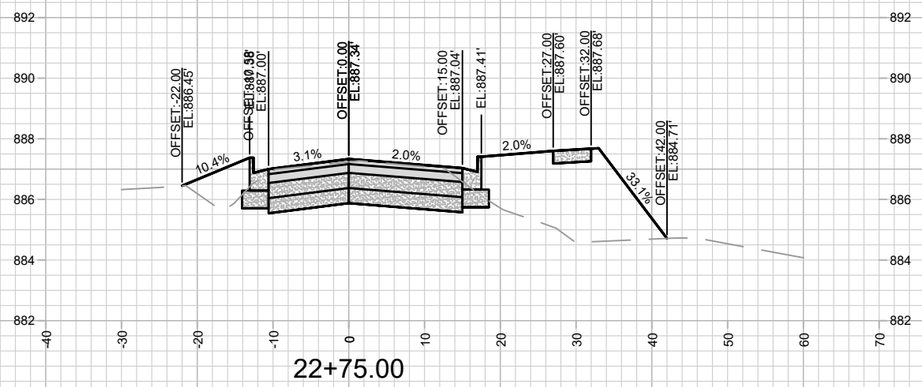

22+75.00

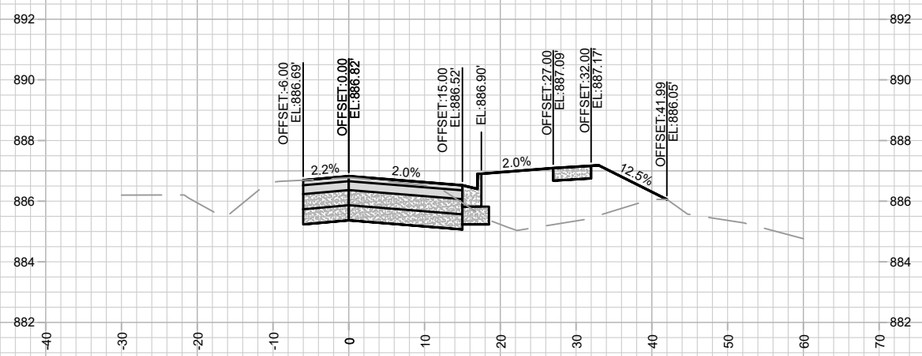

22+50.00

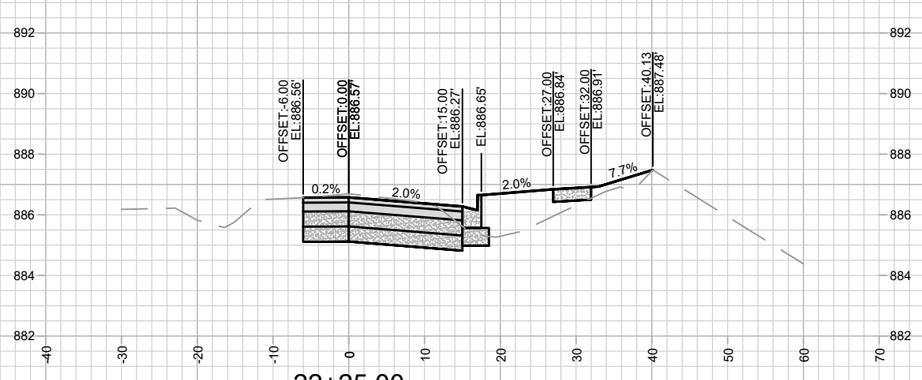

22+25.00

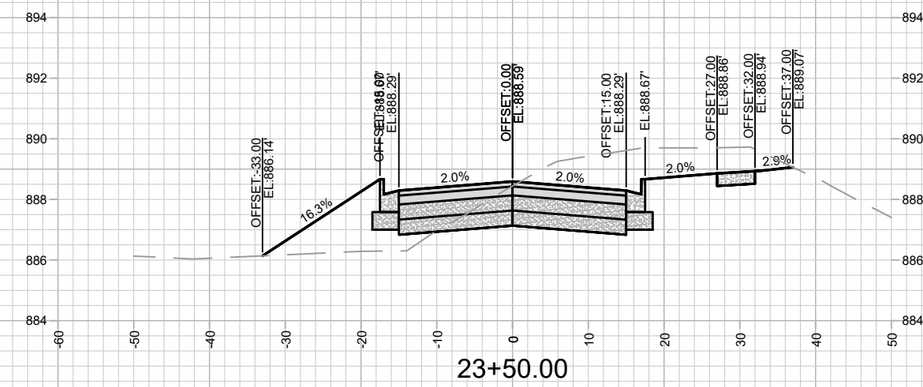

23+50.00

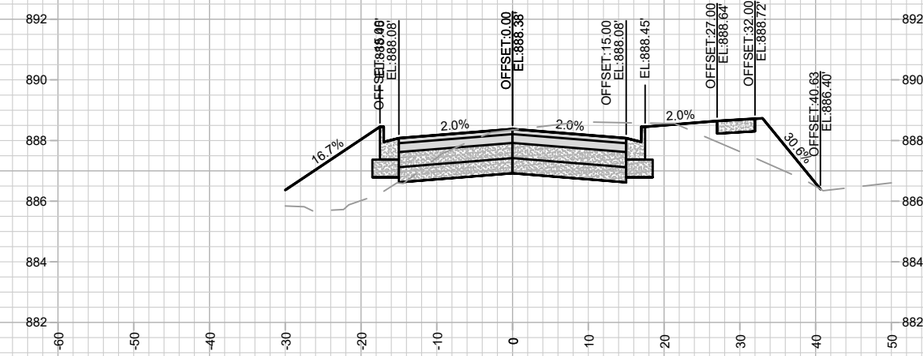

23+25.00

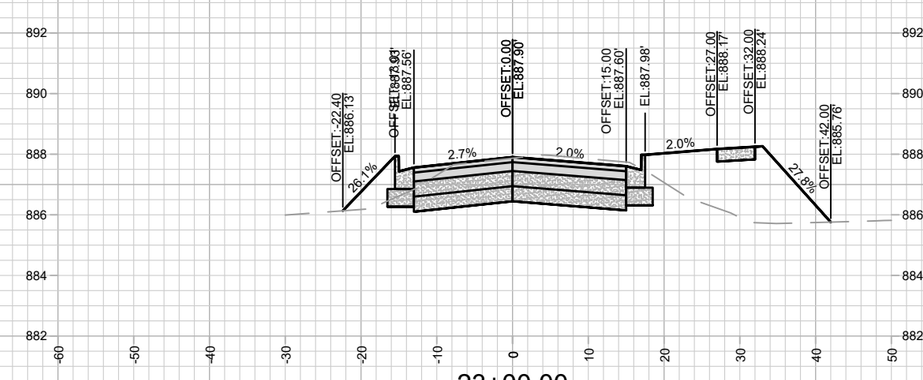

23+00.00

MARK	REVISION	DATE	BY
---	---	---	---
---	---	---	---
---	---	---	---
---	---	---	---

Designed By: IO
Date: 10/23/2024 5:28 AM
Scale: 1" = 20'

X-7

14950

MADISON, WI

9481

CONTRACT NO:

CROSS SECTIONS - LUDS LN

LUDS LANE AND FEMRITE DRIVE CSM

M:\DESIGN\Projects\14950\CAD\Streets\14950EN-AllProf&Corridor_Setup_IO.dwg

14950

X-7

24+25.00

25+00.00

24+00.00

24+75.00

23+75.00

24+50.00

MARK	REVISION	DATE	BY
---	---	---	---
---	---	---	---
---	---	---	---
---	---	---	---

Designed By: IO
Date: 10/23/2024 5:28 AM
Scale: 1" = 20'

14950

MADISON, WI

CONTRACT NO: 9481

CROSS SECTIONS - LUDS LN

LUDS LANE AND FEMRITE DRIVE CSM

M:\DESIGN\Projects\14950\CAD\Streets\14950EN-AllProf&Corridor_Setup_IO.dwg

14950

X-8

25+75.00

26+50.00

25+50.00

26+25.00

25+25.00

26+00.00

MARK	REVISION	DATE	BY
---	---	---	---
---	---	---	---
---	---	---	---
---	---	---	---

Designed By: IO
Date: 10/23/2024 5:28 AM
Scale: 1" = 20'

14950

X-9

14950

MADISON, WI

9481

CONTRACT NO:

CROSS SECTIONS - LUDS LN

LUDS LANE AND FEMRITE DRIVE CSM

M:\DESIGN\Projects\14950\CAD\Streets\14950EN-AllProf&Corridor_Setup_IO.dwg

14950

X-9

27+25.00

28+00.00

27+00.00

27+75.00

26+75.00

27+50.00

MARK	REVISION	DATE	BY
---	---	---	---
---	---	---	---
---	---	---	---
---	---	---	---
---	---	---	---

Designed By: IO | Date: 10/23/2024 5:28 AM | Scale: 1" = 20'

14950 | X-10

14950

MADISON, WI

CONTRACT NO: 9481

CROSS SECTIONS - LUDS LN

LUDS LANE AND FEMRITE DRIVE CSM

M:\DESIGN\Projects\14950\CAD\Streets\14950EN-AllProf&Corridor_Setup_IO.dwg

CITY OF MADISON WISCONSIN

14950

X-10

28+75.00

29+50.00

28+50.00

29+25.00

28+25.00

29+00.00

MARK	REVISION	DATE	BY
---	---	---	---
---	---	---	---
---	---	---	---
---	---	---	---

Designed By: IO
Date: 10/23/2024 5:28 AM
Scale: 1" = 20'

14950

MADISON, WI

9481

CONTRACT NO:

CROSS SECTIONS - LUDS LN

LUDS LANE AND FEMRITE DRIVE CSM

M:\DESIGN\Projects\14950\CAD\Streets\14950EN-AllProf&Corridor_Setup_IO.dwg

14950

X-11

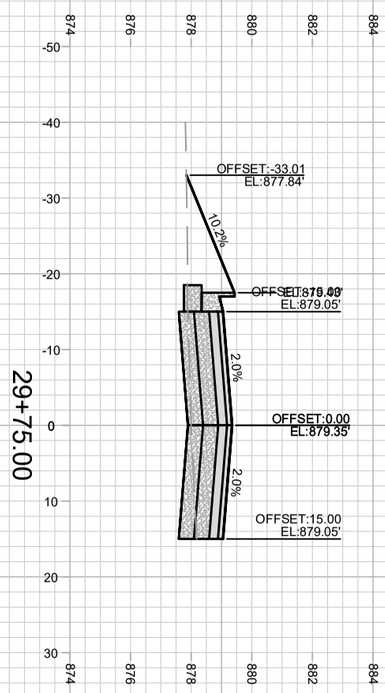

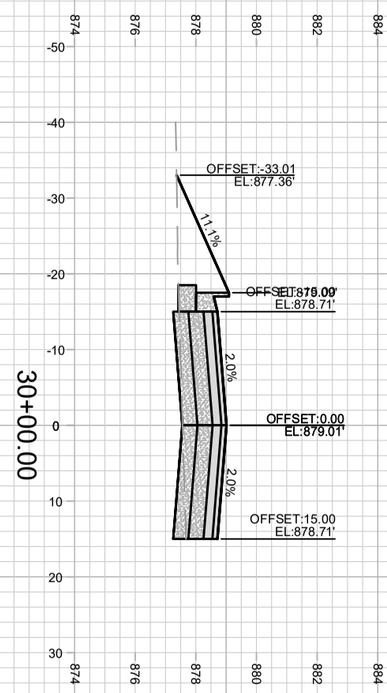

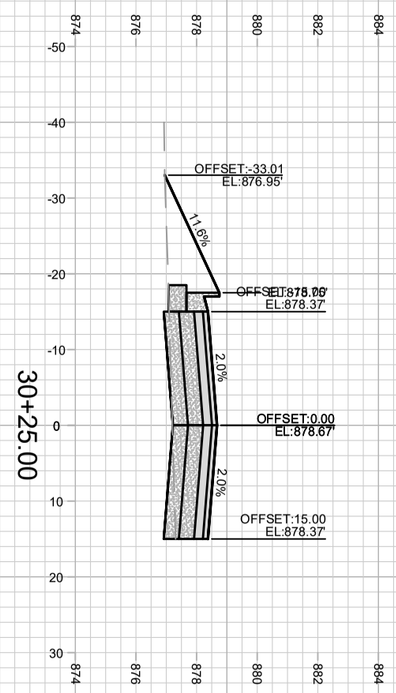

CROSS SECTIONS - LUDS LN		14950	
LUDS LANE AND FEMRITE DRIVE CSM		MADISON, WI	
M:\DESIGN\Projects\14950\CAD\Streets\14950EN-AliProf&Corridor_Setup_IO.dwg	CONTRACT NO:	9481	

MARK	REVISION	DATE	BY
---	---	---	---
---	---	---	---
---	---	---	---
---	---	---	---

Designed By: IO	Date: 10/23/2024 5:28 AM	Scale: 1" = 20'
14950		X-12

14950

X-12

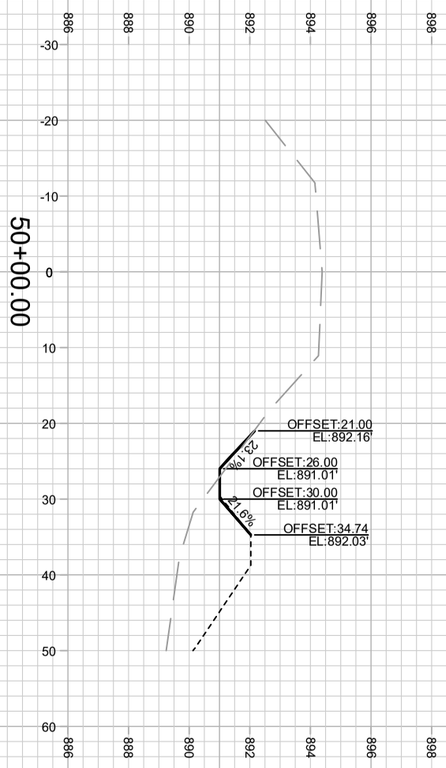

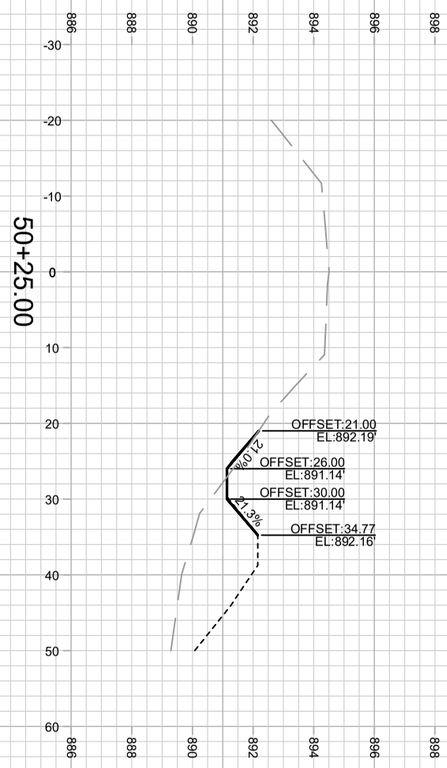

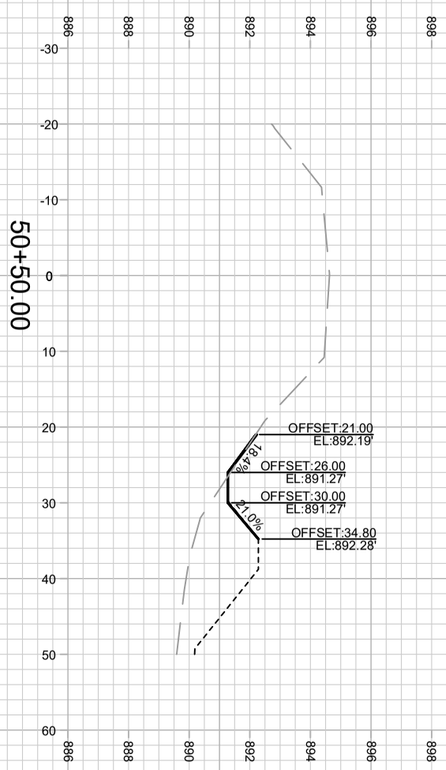

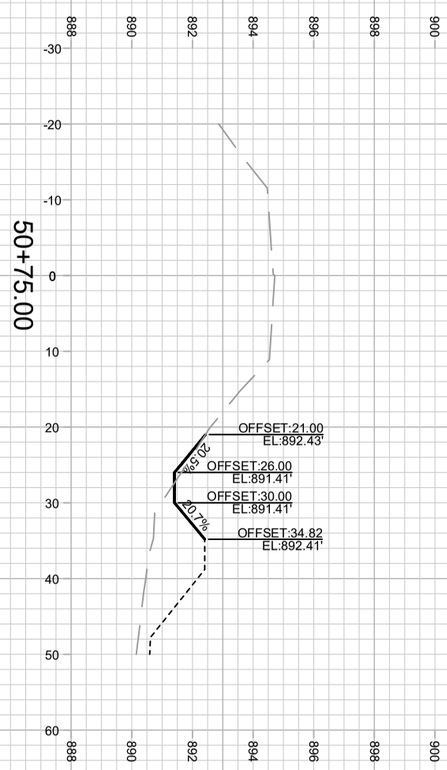

X-13

14950

CROSS SECTIONS - LUDS CT 14950

LUDS LANE AND FEMRITE DRIVE CSM MADISON, WI

M:\DESIGN\Projects\14950\CAD\Streets\14950EN-AliProf&Corridor_Setup_IO.dwg CONTRACT NO: 9481

MARK	REVISION	DATE	BY
---	---	---	---
---	---	---	---
---	---	---	---
---	---	---	---

Designed By: IO | Date: 10/23/2024 5:29 AM | Scale: 1" = 20'

14950 X-13

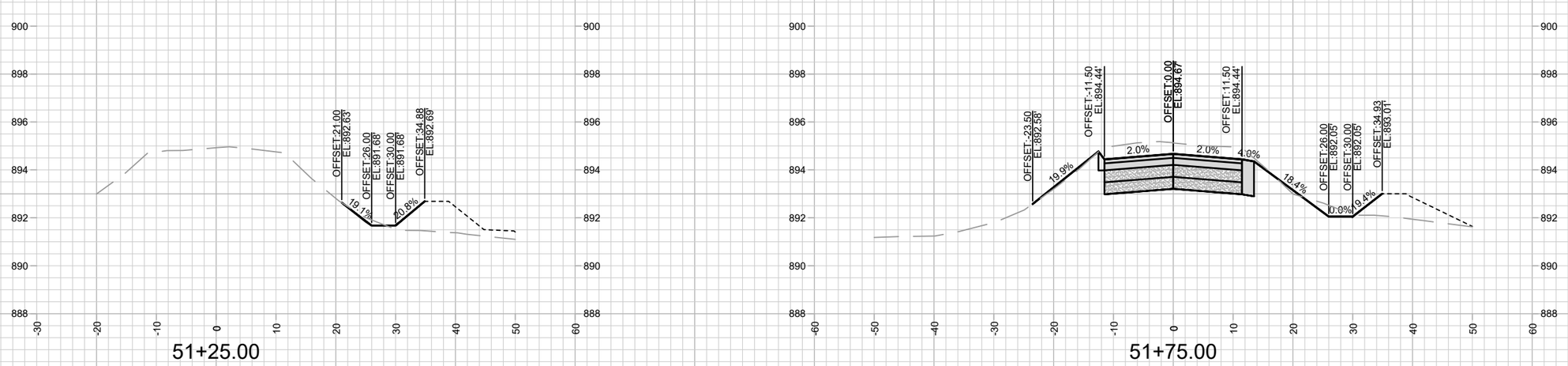

MARK	REVISION	DATE	BY
---	---	---	---
---	---	---	---
---	---	---	---
---	---	---	---

Designed By: IO
Date: 10/23/2024 5:29 AM
Scale: 1" = 20'

14950

MADISON, WI

CONTRACT NO: 9481

CROSS SECTIONS - LUDS CT

LUDS LANE AND FEMRITE DRIVE CSM

M:\DESIGN\Projects\14950\CAD\Streets\14950EN-AllProf&Corridor_Setup_IO.dwg

14950

X-14

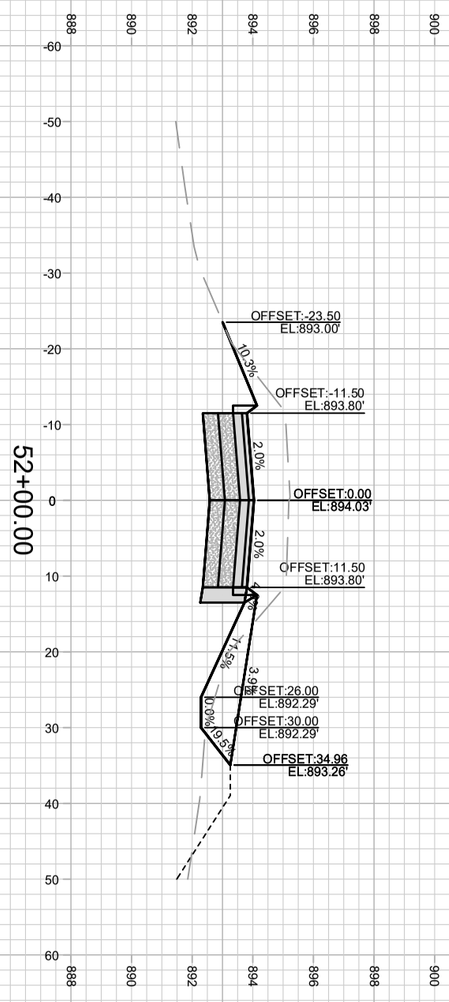

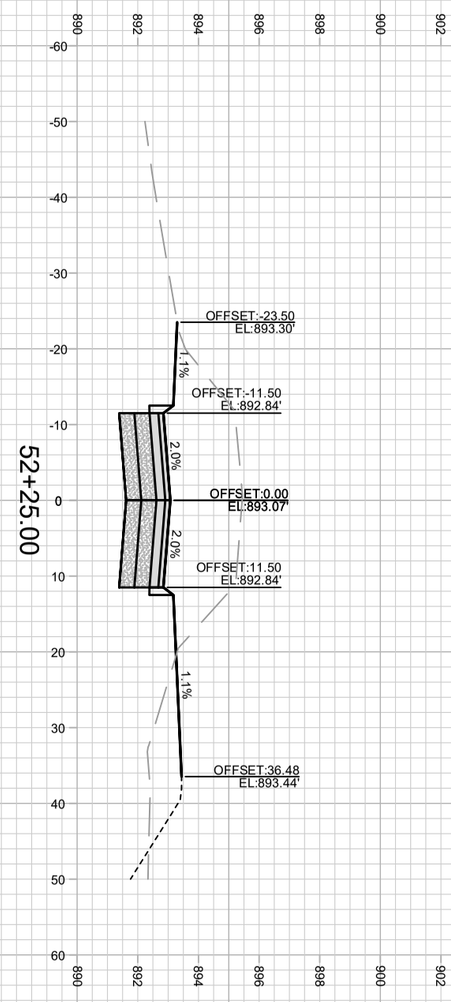

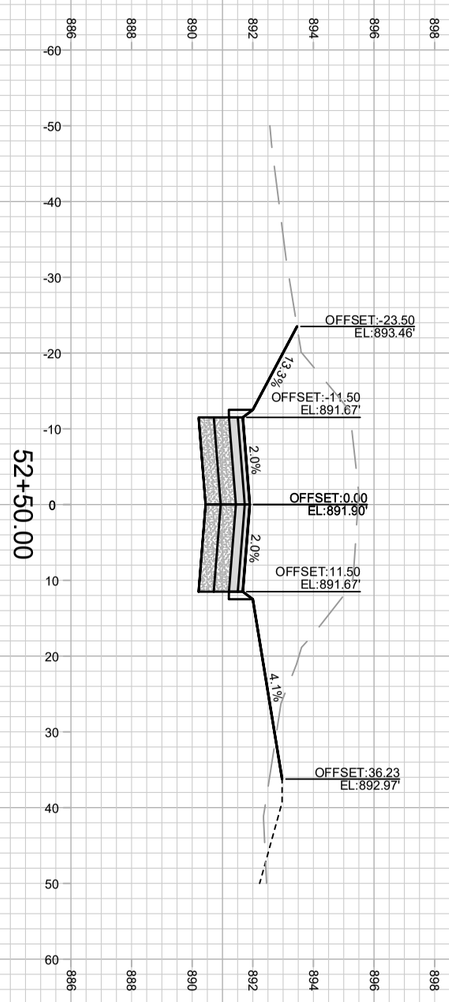

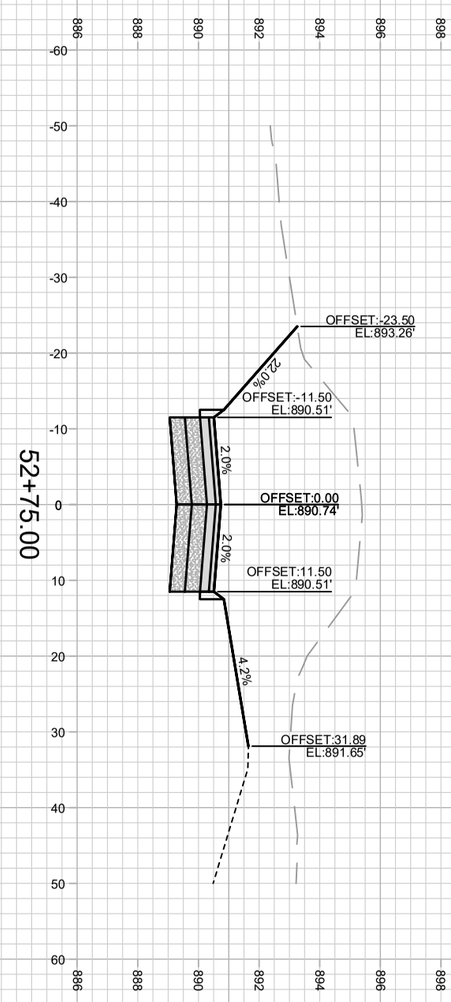

X-15

14950

CROSS SECTIONS - LUDS CT 14950

LUDS LANE AND FEMRITE DRIVE CSM MADISON, WI

M:\DESIGN\Projects\14950\CAD\Streets\14950EN-AliProf&Corridor_Setup_IO.dwg CONTRACT NO: 9481

MARK	REVISION	DATE	BY
---	---	---	---
---	---	---	---
---	---	---	---
---	---	---	---

Designed By: IO | Date: 10/23/2024 5:29 AM | Scale: 1" = 20'

14950 X-15

53+25.00

53+75.00

53+00.00

53+50.00

MARK	REVISION	DATE	BY
---	---	---	---
---	---	---	---
---	---	---	---
---	---	---	---

Designed By: IO
Date: 10/23/2024 5:29 AM
Scale: 1" = 20'

14950

MADISON, WI

CONTRACT NO: 9481

CROSS SECTIONS - LUDS CT

LUDS LANE AND FEMRITE DRIVE CSM

M:\DESIGN\Projects\14950\CAD\Streets\14950EN-AllProf&Corridor_Setup_IO.dwg

14950

X-16

26+75.00

27+50.00

26+50.00

27+25.00

26+37.50

27+00.00

MARK	REVISION	DATE	BY
---	---	---	---
---	---	---	---
---	---	---	---
---	---	---	---

Designed By: IO
Date: 10/23/2024 5:29 AM
Scale: 1" = 20'
14950
X-17

14950

MADISON, WI

9481

CONTRACT NO:

CROSS SECTIONS - LUDS CT SANITARY ACCESS RD

LUDS LANE AND FEMRITE DRIVE CSM

M:\DESIGN\Projects\14950\CAD\Streets\14950EN-AllProf&Corridor_Setup_IO.dwg

14950

X-17

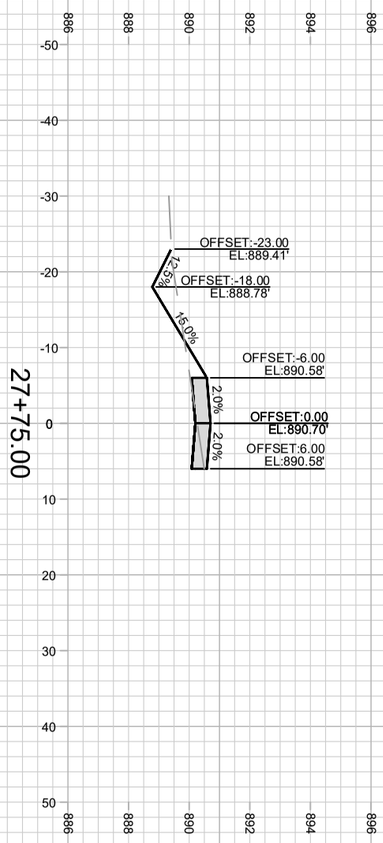

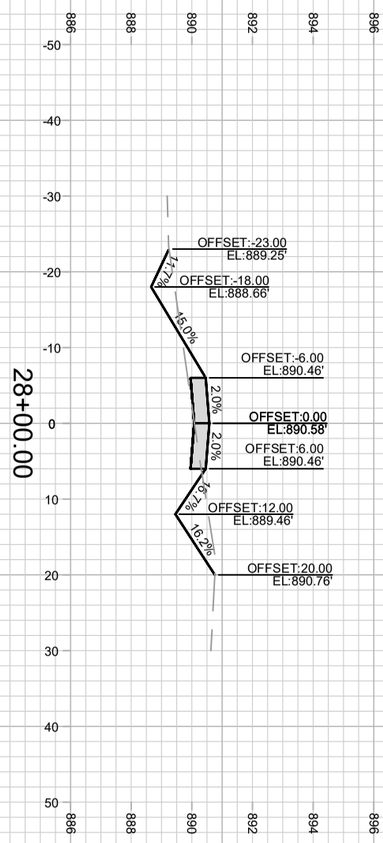

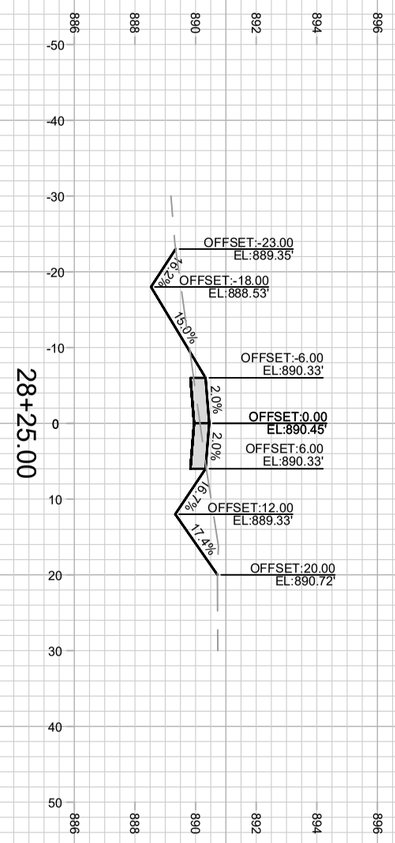

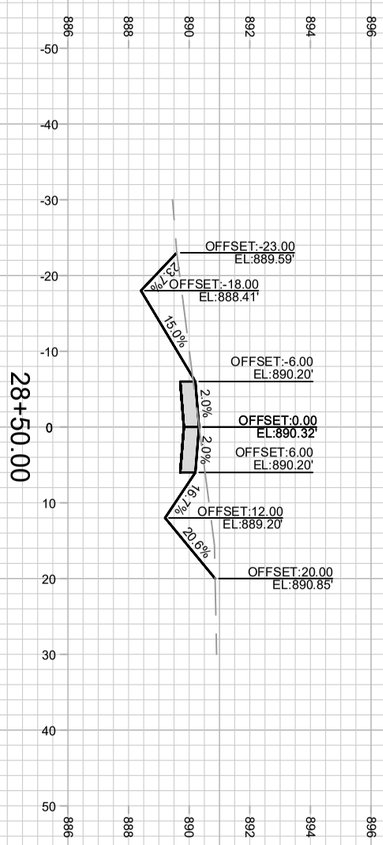

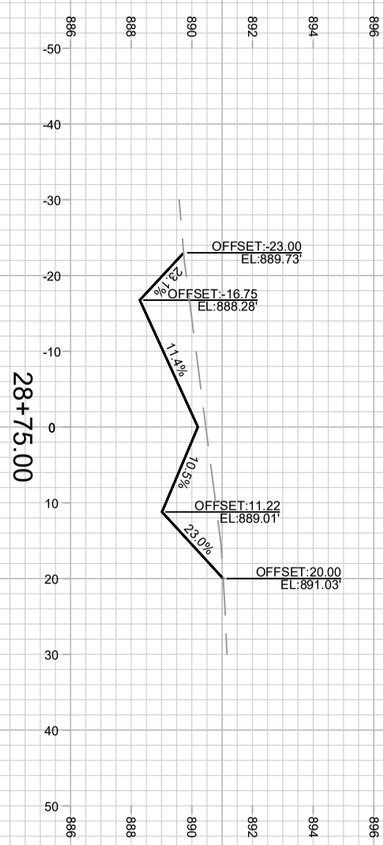

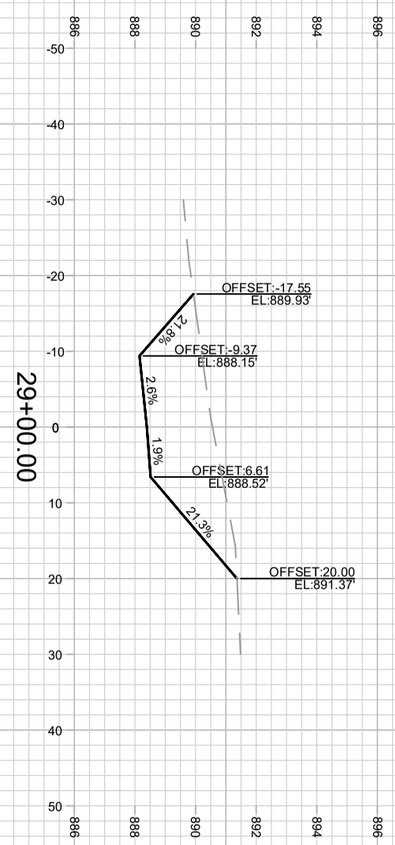

CROSS SECTIONS - LUDS CT SANITARY ACCESS RD		14950	
LUDS LANE AND FEMRITE DRIVE CSM		MADISON, WI	
M:\DESIGN\Projects\14950\CAD\Streets\14950EN-AliProf&Corridor_Setup_IO.dwg	CONTRACT NO:	9481	

MARK	REVISION	DATE	BY
---	---	---	---
---	---	---	---
---	---	---	---
---	---	---	---

Designed By: IO	Date: 10/23/2024 5:29 AM	Scale: 1" = 20'
14950		X-18

14950
X-18

MARK	REVISION	DATE	BY
---	---	---	---
---	---	---	---
---	---	---	---
---	---	---	---

Designed By: IO
Date: 10/23/2024 5:30 AM
Scale: 1" = 20'

14950

14950

MADISON, WI

9481

CONTRACT NO:

CROSS SECTIONS - LUDS CT SANITARY ACCESS RD

LUDS LANE AND FEMRITE DRIVE CSM

M:\DESIGN\Projects\14950\CAD\Streets\14950EN-AllProf&Corridor_Setup_IO.dwg

14950

X-19

X-19

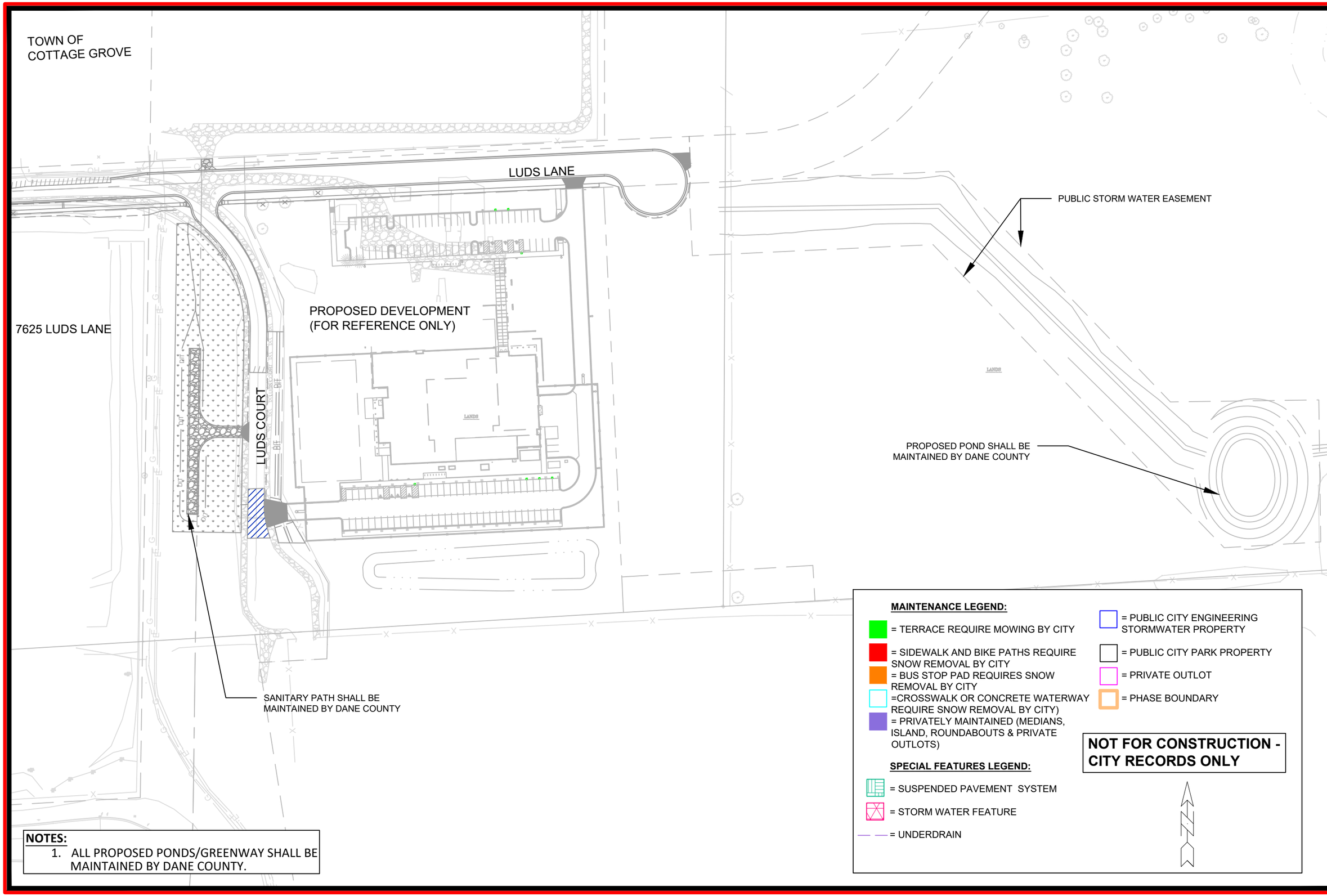

NOTES:

1. ALL PROPOSED PONDS/GREENWAY SHALL BE MAINTAINED BY DANE COUNTY.

MARK	REVISION	DATE	BY
---	---	---	---
---	---	---	---
---	---	---	---
---	---	---	---

Designed By: IO
Date: 10/16/2024 7:14 AM
Scale: ##########

14950

MAINTENANCE PLAN

LUDS LANE AND FEMRITE DRIVE CSM

M:\DESIGN\Projects\14950\CAD\Streets\14950EN-Maintenance.dwg

MADISON, WI

CONTRACT NO: 9481

14950

MN-1

STORM SEWER SCHEDULE

● REVISION 1 - 12/2/2024 EAC
ϕ REVISION 3 - 6/5/2025 EAC

LUDS LN AND FEMRITE DR CSM	SHEET NO.
PROJECT NO. 14950	U-9
STORM SEWER SCHEDULE	
CITY OF MADISON	

U-9

PROPOSED STORM STRUCTURES

	STRUC. NO.	STATION	LOCATION (OFFSET)	TYPE	TOP OF CASTING	E.I.	DEPTH	NOTES
	LUDS LN							
	S-1	31+23.69'	RT-71.81	21" AE W/ GATE	-	873.50	-	[1]
	S-2	30+73.19	RT-51.17	TERRACE INLET TYPE III	877.44	874.20	3.24	[6]; LP; FP
	S-3	29+94.36	RT-16.50	3'X3' SAS	878.78	874.63	4.15	W/R-1550-0054
	S-4	28+97.38	RT-16.51	3'X3' SAS	880.62	875.11	5.51	W/R-3067-7004-V
	S-4A	28+97.09	LT-16.50	H-INLET	880.63	877.13	3.50	W/R-3067-7004-V
	S-5	24+46.91	RT-16.51	5'X5' SAS	888.24	877.36	10.88	W/R-3067-7004-V
	S-5A	24+46.91	LT-16.49	H-INLET	888.24	883.77	4.47	W/R-3067-7004-V
	S-6	22+00.00	RT-16.51	3'X3' SAS	886.53	878.59	7.94	LP; W/R-3067-7004-VB
	S-6A	21+91.50	RT-16.51	3'X3' SAS	886.57	878.63	7.94	W/R-3067-7004-VB
	S-7	18+37.20	RT-16.51	3'X3' SAS	884.85	880.95	3.90	[5]; LP; FP; W/R-3067-7004-VB
	S-7A	18+41.34	LT-19.19	18" AE W/ GATE	-	881.43	-	[2]; [5]
	S-8	17+63.93	RT-16.50	H-INLET	885.44	882.37	3.07	W/R-3067-7004-V
	S-9	15+54.09	RT-16.50	H-INLET	888.32	885.32	3.00	W/R-3067-7004-V
	S-20	16+72.87	RT-41.08	3'X3' SAS	884.49	880.46	4.03	[7]; FP; W/R-1550-0054
	S-21	16+97.91	RT-42.00	24" AE W/ GATE	-	881.87	-	[8]
	SANITARY MAINTENANCE PATH							
●	S-5B	**30+65.05**	**RT-40.25**	H-INLET	**888.08**	881.25	**6.83**	LP; W/R-3067-7004-VB
●	S-5C	**30+55.15**	**RT-8.76**	H-INLET	888.21	882.18	6.03	LP; W/R-3067-7004-VB
● ϕ	S-5D	**30+47.55**	**CL**	3'X3' SAS	**886.52**	882.52	**4.00**	**[3]; LP; R-1878-B7G**
●	S-10	26+22.23	RT-130.30	**14"X23" AE W/ GATE**	-	888.69	-	[4];
●	S-11	26+65.48	RT-117.63	**14"X23" AE W/ GATE**	-	890.72	-	[4]; LP
●	**S-31**	**26+20.35**	**RT-128.42**	**18" AE W/ GATE**	**-**	**888.69**	**-**	**[9]**
●	**S-32**	**26+33.76**	**RT-64.98**	**18" AE W/ GATE**	**-**	**889.34**	**-**	**[10]**

PROPOSED STORM PIPES

	PIPE NO.	FROM (DNSTM)	TO (UPSTM)	DISCH. E.I.	INLET E.I.	PLAN (PAY) LGTH (FT)	PIPE LGTH (FT)	SLOPE (%)	PIPE SIZE	TYPE	NOTES
	LUDS LN										
	P-1	S-1	S-2	873.50	874.20	53	51	1.37%	21"	RCP	
	P-2	S-2	S-3	874.20	874.63	88	85	0.51%	21"	RCP	
	P-3	S-3	S-4	874.63	875.11	97	94	0.51%	21"	RCP	
	P-4	S-4	S-5	875.11	877.36	450	446	0.50%	21"	RCP	
	P-4A	S-4	S-4A	876.96	877.13	33	31	0.55%	12"	RCP	NCM
	P-5	S-5	S-6	877.36	878.59	247	243	0.51%	21"	RCP	
	P-5A	S-5	S-5A	883.61	883.77	33	29	0.55%	12"	RCP	NCM
	P-6A	S-6	S-6A	878.59	878.63	9	6	0.67%	21"	RCP	
	P-6B	S-6A	S-7	878.63	880.95	354	351	0.66%	21"	RCP	
	P-7	S-7	S-8	881.70	882.37	73	70	0.96%	12"	RCP	
	P-7A	S-7	S-7A	881.20	881.43	36	35	0.66%	18"	RCP	
	P-8	S-8	S-9	882.37	885.32	210	207	1.43%	12"	RCP	
	P-20	S-20	S-21	880.46	881.87	25	24	5.87%	24"	TYPE II	
	SANITARY MAINTENANCE PATH										
	P-5B	S-5	S-5B	880.11	881.25	40	36	3.17%	12"	RCP	NCM
	P-5C	S-5B	S-5C	881.25	882.18	33	31	3.00%	12"	RCP	
	P-5D	S-5C	S-5D	882.18	882.52	12	9	3.78%	12"	RCP	
●	P-10	S-10	S-11	888.69	890.72	45	45	4.51%	**14"X23"**	**HERCP**	
●	**P-31**	**S-31**	**S-32**	**888.69**	**889.34**	**65**	**65**	**1.00%**	**18"**	**RCP**	

STORM STRUCTURE REMOVALS & ABANDONMENTS

STRUC. NO.	ID NO.	STATION	LOCATION (OFFSET)	TYPE	DEPTH (FT)	NOTES
LUDS LN						
RS-1	UNMARKED END #1	18+41.34	LT-19.19	15" CMP END	-	
RS-2	UNMARKED END #7	18+35.35	RT-30.57	15" CMP END		
RS-3	UNMARKED END #2	24+12.62	RT-23.84	18" CPP END	-	
RS-4	UNMARKED END #3	23+78.08	RT-4.02	18" CPP END	-	
RS-7	UNMARKED END #6	16+94.66	RT-36.83	24" CPP END	-	
SANITARY MAINTENANCE PATH						
RS-5	UNMARKED END #4	26+33.76	RT-64.98	18" CPP END		
RS-6	UNMARKED END #5	26+33.82	RT-115.29	18" CPP END		

STORM PIPE REMOVALS & ABANDONMENTS

PIPE REMOVAL N	REMOVE FROM	REMOVE TO	LGTH (FT)	PAID (Y/N)	REM LGTH PAID (FT)	ABN LGTH (FT)	SLURRY (CY)	PIPE SIZE	PIPE TYPE	NOTES
LUDS LN										
RP-1	S-7	S-7A	36	N	-	-	-	15"	CMP	[5]
RP-2	RS-2	S-7	12	Y	-	-	-	15"	CMP	
RP-3	RS-3	RS-4	40	Y	-	-	-	18"	CPP	
RP-7	S-20	RS-7	22	Y	-	-	-	24"	CPP	
SANITARY MAINTENANCE PATH										
RP-5	RS-5	RS-6	50	Y	-	-	-	18"	CPP	

SPECIFIC NOTES:

[1] ENDWALL DISCHARGE INVERT TO MATCH PRIMARY DRAINAGE SWALE - SEE PRIVATE DEVELOPMENT PLANS FOR DRAINAGE SWALE DESIGN
[2] TIE-IN TO EXISTING DRAINAGE DITCH, EI = 881.43 PER DEVELOPER - SEE DEVELOPMENT STORM WATER MANAGEMENT PLAN
ϕ **[3] TOP OF FRAME TO MATCH DRAINAGE DITCH LOW POINT~~, BEEHIVE GRATE SHOULD SIT ABOVE LOW POINT~~**
[4] ENDWALL INVERTS TO MATCH DRAINAGE SWALE, S-11 TO MATCH DRAINAGE DITCH LOW POINT
[5] PORTION OF P-7A, S-7A, AND RP-1 LOCATED IN TOWN OF COTTAGE GROVE RIGHT-OF-WAY - COORDINATE FOR REMOVAL
[6] TOP OF CASTING ELEVATION SET 0.2 FEET BELOW TOP OF CURB AT STRUCTURE LOCATION, CONSTRUCT IN ACCORDANCE WITH SDD 5.7.12B
[7] TIE-IN TO EXISTING DRIVEWAY CULVERT PIPE, APPROXIMATE EI = 880.46 AT TIE-IN
[8] TIE-IN TO RELOCATED DRAINAGE DITCH, EI = 881.87
● **[9] ENDWALL INVERT TO MATCH DRAINAGE SWALE LOW POINT TO GREATEST EXTENT POSSIBLE**
● **[10] MATCH ELEVATION OF EXISTING 18" CPP END (RS-5)**

STORM ULO SCHEDULE

ID NO. (OFFSET)	STATION	LOCATION (OFFSET)	TYPE	NOTES
LUDS LN				
ULO1-G	15+54.09	RT-17.00	GAS	
ULO2A-E	21+99.97	RT-17.78	ELECTRIC	
ULO2B-E	21+91.53	RT-17.83	ELECTRIC	

STANDARD NOTES:

- ABBREVIATIONS: AE = APRON ENDWALL; RCP = REINFORCED CONCRETE PIPE; HERCP = HORIZONTAL ELLIPTICAL REINFORCED CONCRETE PIPE; DNA = DOES NOT APPLY; SAS = SEWER ACCESS STRUCTURE; LP = LOW POINT INLET STRUCTURE; FP = FIELD POURED STRUCTURE; TR = TOP OF CONCRETE ROOF; NCM = NO CROWN MATCH FOR PIPES; UD = UNDERDRAIN
- PLAN LENGTH (PAY LENGTH) IS FROM CENTER OF STRUCTURE TO CENTER OF STRUCTURE. PIPE LENGTH IS ACTUAL LENGTH OF PIPE FROM STRUCTURE WALL TO STRUCTURE WALL. SLOPE CALCULATED USING PIPE LENGTH.
- TOP OF CASTING GRADE GIVEN IS THE TOP OF CURB FOR INLET STRUCTURES AND THE FLOWLINE OF THE CLOSED CASTING FOR SAS.
- APPROXIMATE DISCHARGE E.I. GIVEN, ADJUST E.I. AND PIPE SLOPE IN THE FIELD.
- ALL REINFORCED CONCRETE PIPES TO BE CLASS 3 UNLESS OTHERWISE NOTED.

-ALL FIELD POURED SAS STORM STRUCTURES SHALL BE CONSTRUCTED IN ACCORDANCE WITH STANDARD DETAIL DRAWING 5.7.3. ALL PRECAST SAS STORM STRUCTURES SHALL BE CONSTRUCTED IN ACCORDANCE WITH STANDARD DETAIL DRAWING 5.7.5.

- ALL STRUCTURES CALLED OUT AS FIELD POURED SHALL BE FIELD POURED. ALL OTHER STRUCTURES (NOT INDICATED AS FIELD POURED) SHALL BE SUBMITTED TO CITY ENGINEERING FOR APPROVAL ECEFALU@CITYOFMADISON.COM ((608) 243-5894).

-ALL REBAR FOR FIELD POURED STRUCTURES SHALL BE EPOXY COATED. ANY EXPOSED STEEL SHALL BE TOUCHED UP OR RECOATED PRIOR TO USE.

- SURVEYOR TO CONFIRM THAT ALL INLET STATION / OFFSETS LINE UP WITH PROPOSED CURB AND GUTTER.