KCG DEVELOPMENT

Locator Maps

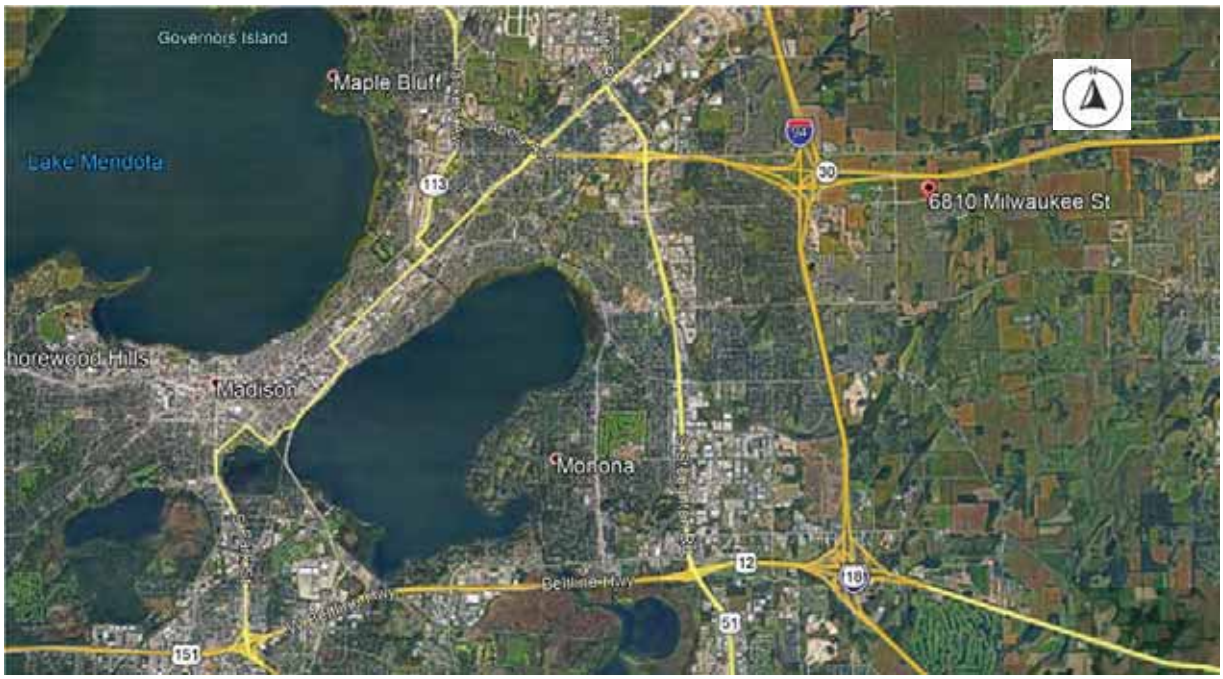

KCG Development
9333 North Meridian Street Suite 230| Indianapolis, IN | 46260 | (317) 708-0943
www.kcgcompanies.com

Sprecher Neighborhood Development Plan

As Adopted January 1998, Amended May 1999, May 2001, November 2001, March 2005 & March 2012
and implemented through subdivision and zoning approvals

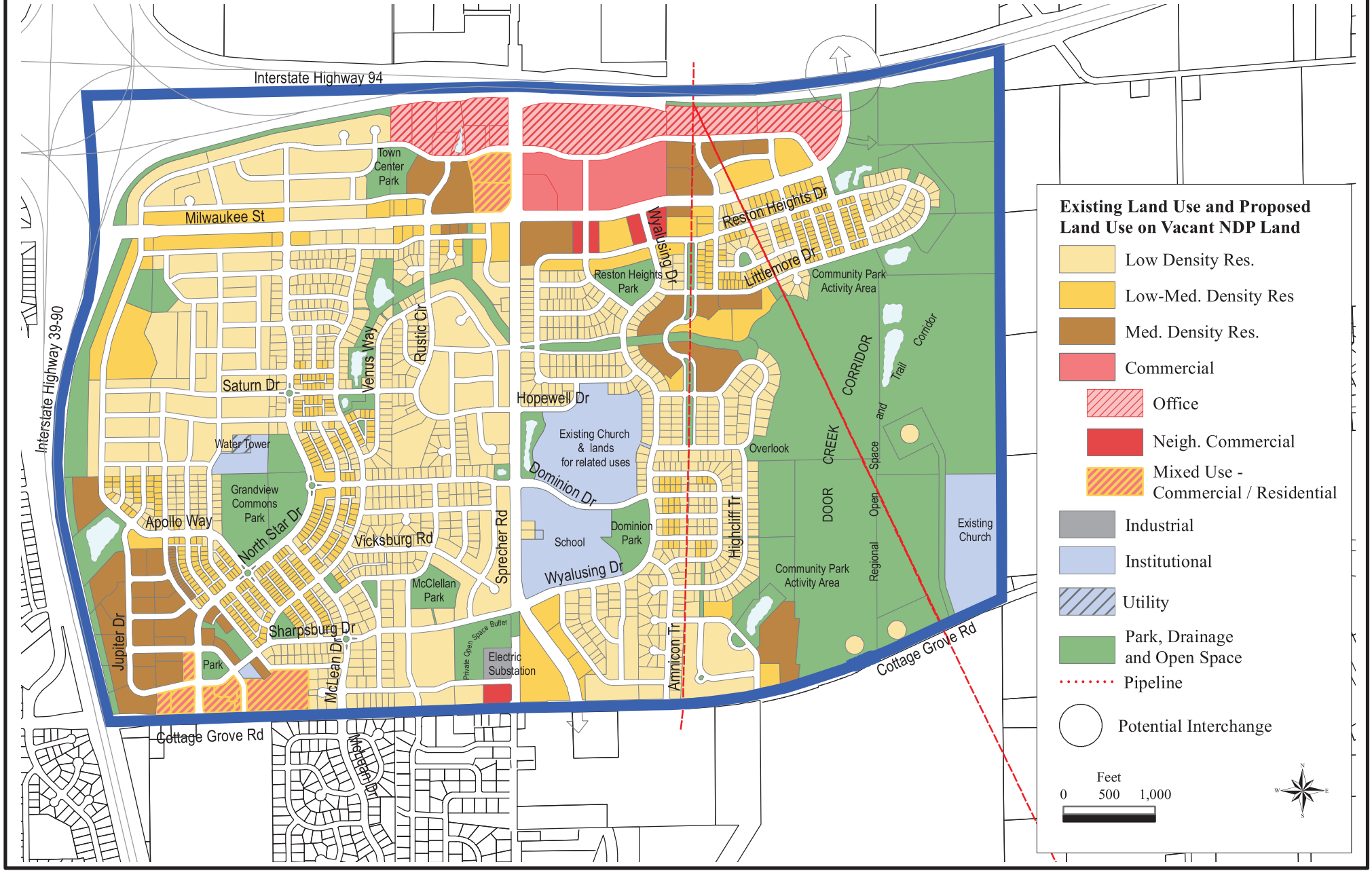

Last Update of NDP file: May 2013

City of Madison Department of Planning & Community & Economic Development, Planning Division

THE MEADOWLANDS

Madison, Wisconsin

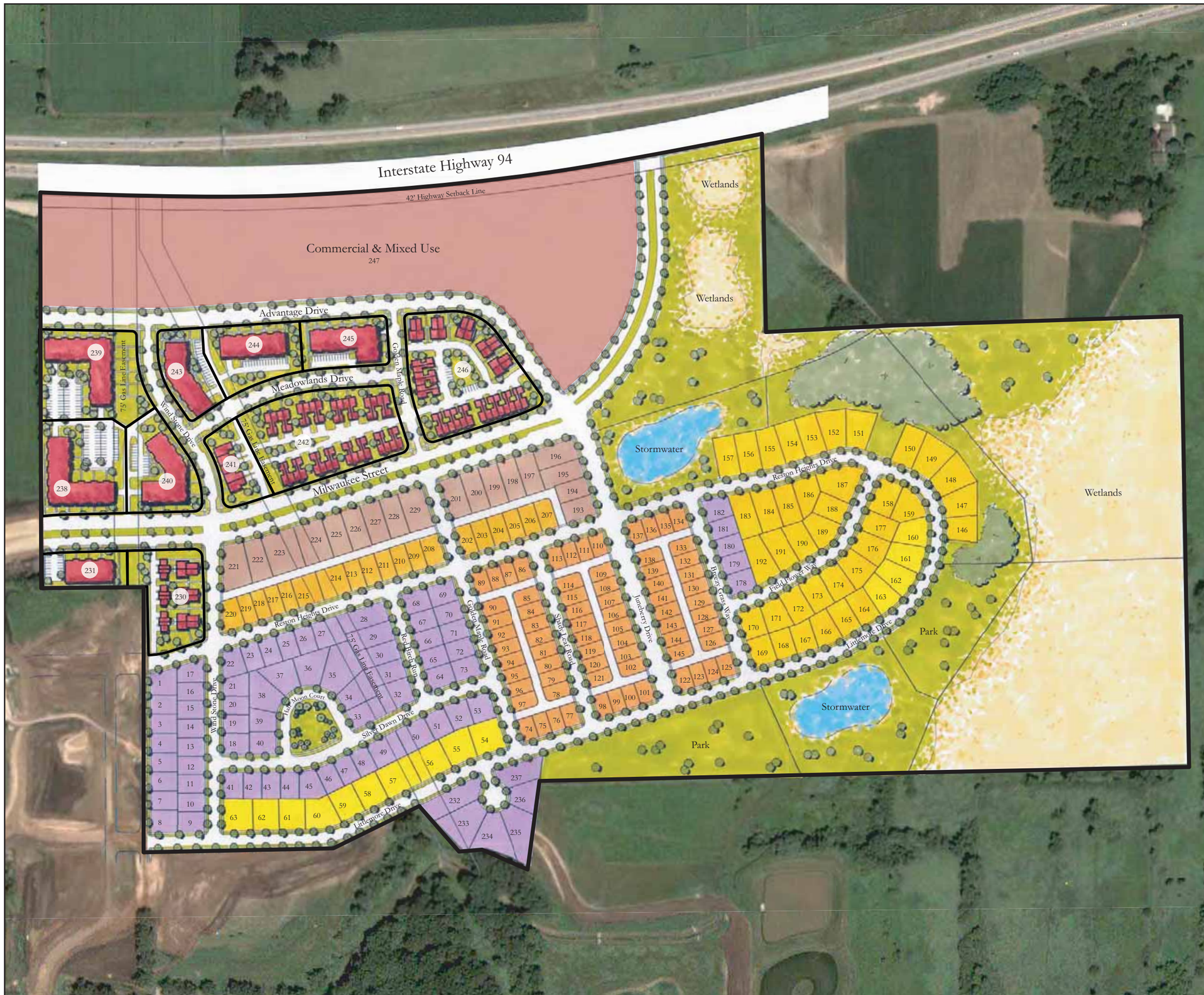

	Single Family (Alley Loaded)	**91 Units**
	45' x 80'	72 Units
	45' x 95'	19 Units
	Single Family (Street Accessed)	**126 Units**
	59' x 85'	74 Units
	69' x 100'	38 Units
	80' x 100'	14 Units
	Multi-Family	**341 Units**
	Twin Homes	36 Units
	Multi-Family Units	305 Units
	Total Units	**558 Units**
	Parks/Open Space/Storm Water	~ 46 Acres

Multi-Family Lot Breakdowns

LOT #	Type of Units	#of Units	Lot Area
230	4-Unit Homes	12	62,563 sq. ft.
231	Condos	22	30,369 sq. ft.
238	Apartment	42	79,884 sq. ft.
239	Apartment	52	92,543 sq. ft.
240	Apartment	26	59,853 sq. ft.
241	Townhomes	5	33,550 sq. ft.
242	Townhomes	32	124,863 sq. ft.
243	Apartment	24	40,614 sq. ft.
244	Condo	24	55,830 sq. ft.
245	Apartment	26	42,576 sq. ft.
246	Townhomes	20	121,798 sq. ft.
	4-Unit Homes	20	
	Totals:	**305**	**17.1 acres**

VERIDIAN HOMES

North
1"=300'
0' 75' 150' 300'

Revised: December 20, 2006

Vandewalle & Associates
© 2006

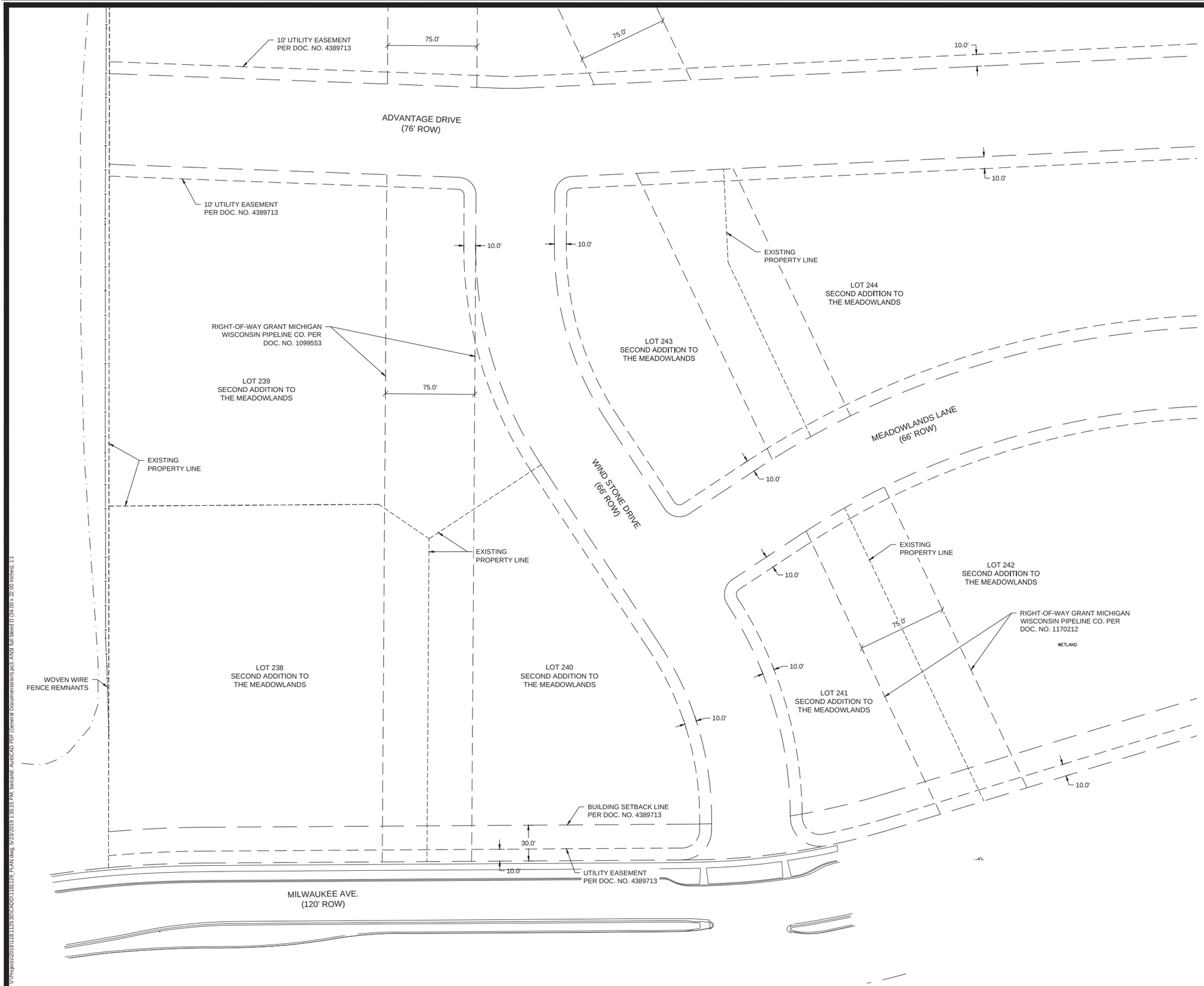

MARK	REVISION	DATE	BY

Engineer: BCA
Technician: BCA
Checked By: MLC
Date: 01-07-2019
Scale: 1" = NOTED
Field Bk:
Pg:

118.1129.30

C 1.0

MADISON, WI

THE MEADOWLANDS - PHASE 11

EXISTING SITE PLAN

SNYDER & ASSOCIATES, INC.
5010 VOGES ROAD
MADISON, WISCONSIN 53718
608-838-0444 | www.snyder-associates.com

SNYDER & ASSOCIATES

118.1129.30

C 1.0

V:\Projects\0118\118.1129.30\CAD\118.1129_PLAN.dwg, 5/28/2019 1:35:15 PM, bamang, AutoCAD PDF (General Documentation).pc3, ANSI full bleed D (34.00 x 22.00 inches), 1:1

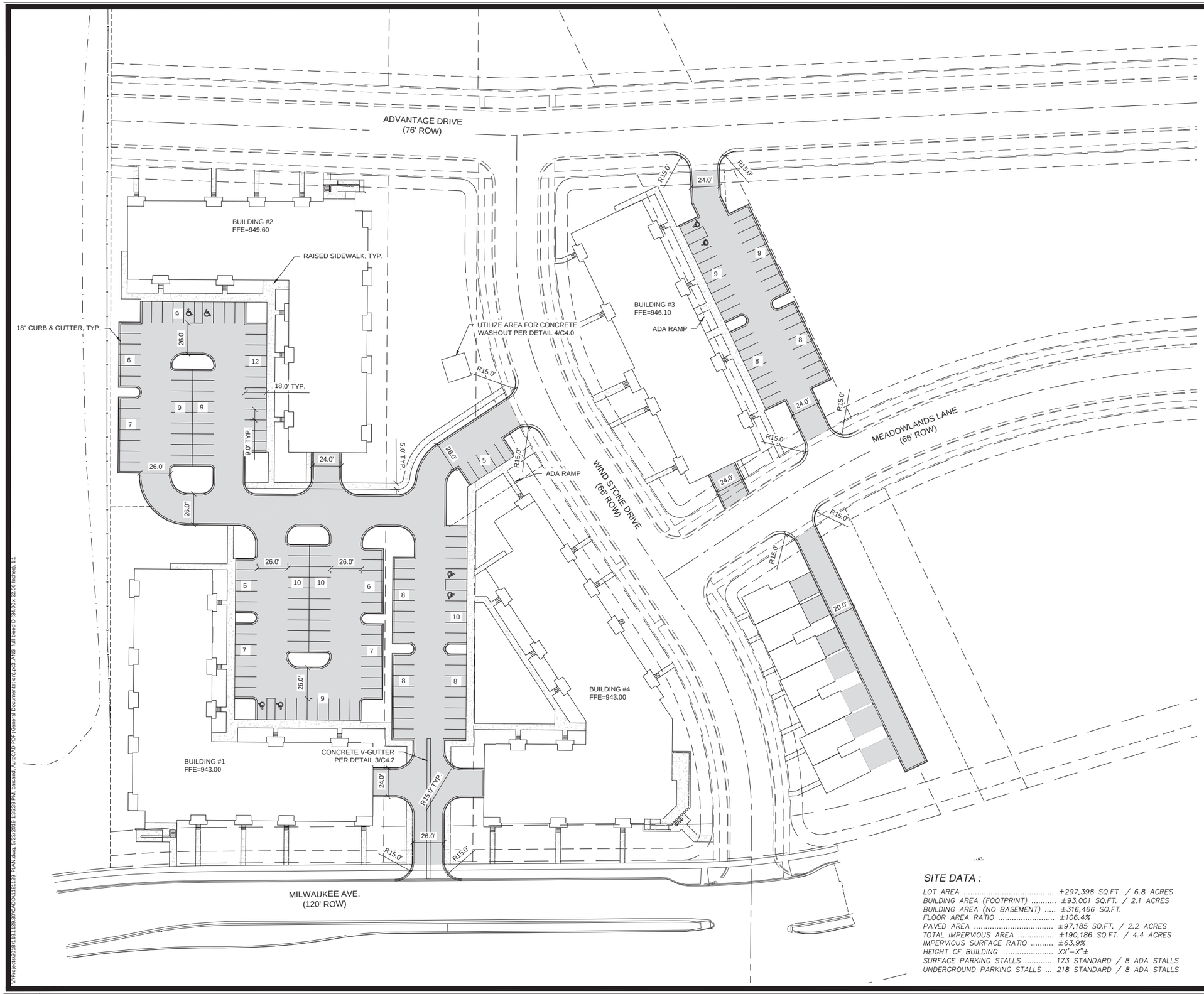

LEGEND

ASPHALT

CONCRETE

NOTES

1. STORMWATER MANAGEMENT REQUIREMENTS WILL BE MET UNDERGROUND.
2. CONTRACTOR SHALL REPLACE ALL SIDEWALK AND CURB AND GUTTER WHICH ABUTS THE PROPERTY WHICH IS DAMAGED BY THE CONSTRUCTION OF ANY SIDEWALK AND CURB AND GUTTER WHICH THE CITY ENGINEER DETERMINES NEEDS TO BE REPLACED BECAUSE IT IS NOT AT A DESIRABLE GRADE REGARDLESS OF WHETHER THE CONDITION EXISTED PRIOR TO BEGINNING CONSTRUCTION.
3. ALL WORK IN THE PUBLIC RIGHT–OF–WAY SHALL BE PERFORMED BY A CITY LICENSED CONTRACTOR.
4. ALL DAMAGE TO THE PAVEMENT ON UNIVERSITY AVENUE AND CAPITOL DRIVE, ADJACENT TO THIS DEVELOPMENT SHALL BE RESTORED IN ACCORDANCE WITH THE CITY OF MADISON'S PAVEMENT PATCHING CRITERIA.
5. THE CONTRACTOR SHALL CLOSE ALL ABANDONED DRIVEWAYS BY REPLACING THE CURB IN FRONT OF THE DRIVEWAYS AND RESTORING THE TERRACE WITH GRASS.

GENERAL CONDITIONS

1. THE CONTRACTOR SHALL NOTIFY THE OWNER TWO WORKING DAYS (48 HOURS) PRIOR TO THE START OF CONSTRUCTION.
2. THE CONTRACTOR SHALL INDEMNIFY THE OWNER, THE ENGINEER, AND THE MUNICIPALITY, THEIR AGENTS, ETC, FROM ALL LIABILITY INVOLVED WITH THE CONSTRUCTION, INSTALLATION, AND TESTING OF THE WORK ON THIS PROJECT.
3. SITE SAFETY SHALL BE THE SOLE RESPONSIBILITY OF THE CONTRACTOR.
4. THE CONTRACTOR IS RESPONSIBLE FOR VERIFYING SOIL CONDITIONS PRIOR TO COMMENCEMENT OF CONSTRUCTION.
5. THE CONTRACTOR IS RESPONSIBLE FOR EXAMINING ALL SITE CONDITIONS PRIOR TO COMMENCEMENT OF CONSTRUCTION AND SHALL COMPARE FIELD CONDITIONS WITH DRAWINGS.
6. THE CONTRACTOR SHALL OBTAIN AND PAY FOR ALL PERMITS REQUIRED FOR EXECUTION OF THE WORK. THE CONTRACTOR SHALL CONDUCT HIS WORK ACCORDING TO THE REQUIREMENTS OF THE PERMITS.
7. THE CONTRACTOR IS RESPONSIBLE FOR FIELD VERIFYING ALL UTILITY INFORMATION SHOWN ON THE PLANS PRIOR TO THE START OF CONSTRUCTION. THE CONTRACTOR SHALL CALL DIGGER'S HOTLINE AT 1–800–242–8511 TO NOTIFY THE UTILITIES OF HIS INTENTIONS, AND TO REQUEST FIELD LOCATING OF EXISTING UTILITIES.
8. CONTRACTOR IS ADVISED THAT ALL MUD AND DEBRIS MUST NOT BE DEPOSITED ONTO THE ADJACENT ROADWAYS PER THE REQUIREMENT OF THE MUNICIPALITY OR OTHER APPROPRIATE GOVERNMENT AGENCIES.
9. ANY ADJACENT PROPERTIES OR ROAD RIGHT–OF–WAYS WHICH ARE DAMAGED DURING CONSTRUCTION MUST BE RESTORED BY THE CONTRACTOR. THE COST OF THE RESTORATION IS CONSIDERED INCIDENTAL, AND SHOULD BE INCLUDED IN THE BID PRICES.
10. REMOVE SIDEWALKS TO THE NEAREST JOINT.
11. SAW CUTS SHALL BE FULL DEPTH PRIOR TO REMOVAL.
12. CITY FORESTRY WILL ISSUE A REMOVAL PERMIT FOR A 2" DIAMETER HORSECHESTNUT TREE DUE TO CONFLICT WITH PROPOSED DRIVEWAY LOCATED AT 3RD TREE ON UNIVERSITY AVE. FROM CAPITAL AVE. PLEASE CONTACT BRAD HOFMANN – BHOFMANN@CITYOFMADISON.COM OR 266–4816 TO OBTAIN STREET TREE REMOVAL PERMIT.

SITE DATA :

LOT AREA	±297,398 SQ.FT. / 6.8 ACRES
BUILDING AREA (FOOTPRINT)	±93,001 SQ.FT. / 2.1 ACRES
BUILDING AREA (NO BASEMENT)	±316,466 SQ.FT.
FLOOR AREA RATIO	±106.4%
PAVED AREA	±97,185 SQ.FT. / 2.2 ACRES
TOTAL IMPERVIOUS AREA	±190,186 SQ.FT. / 4.4 ACRES
IMPERVIOUS SURFACE RATIO	±63.9%
HEIGHT OF BUILDING	XX'–X"±
SURFACE PARKING STALLS	173 STANDARD / 8 ADA STALLS
UNDERGROUND PARKING STALLS	218 STANDARD / 8 ADA STALLS

MARK	REVISION	DATE	BY

Engineer: BCA | Checked By: MLC | Scale: 1" = NOTED
Technician: BCA | Date: 01-07-2019 | Field Bk: Pg:
118.1129.30

C 1.1

MADISON, WI

THE MEADOWLANDS - PHASE 11

SITE PLAN

SNYDER & ASSOCIATES, INC.
5010 VOGES ROAD
MADISON, WISCONSIN 53718
608-838-0444 | www.snyder-associates.com

SNYDER & ASSOCIATES

118.1129.30

C 1.1

V:\Projects\2018\118\1129.30\CADD\118129_PLAN.dwg, 5/29/2019 1:39:39 PM, bacarad, AutoCAD PDF (General Documentation).pc3, ANSI full (Bled D (34.00 x 22.00 Inches), 1:1

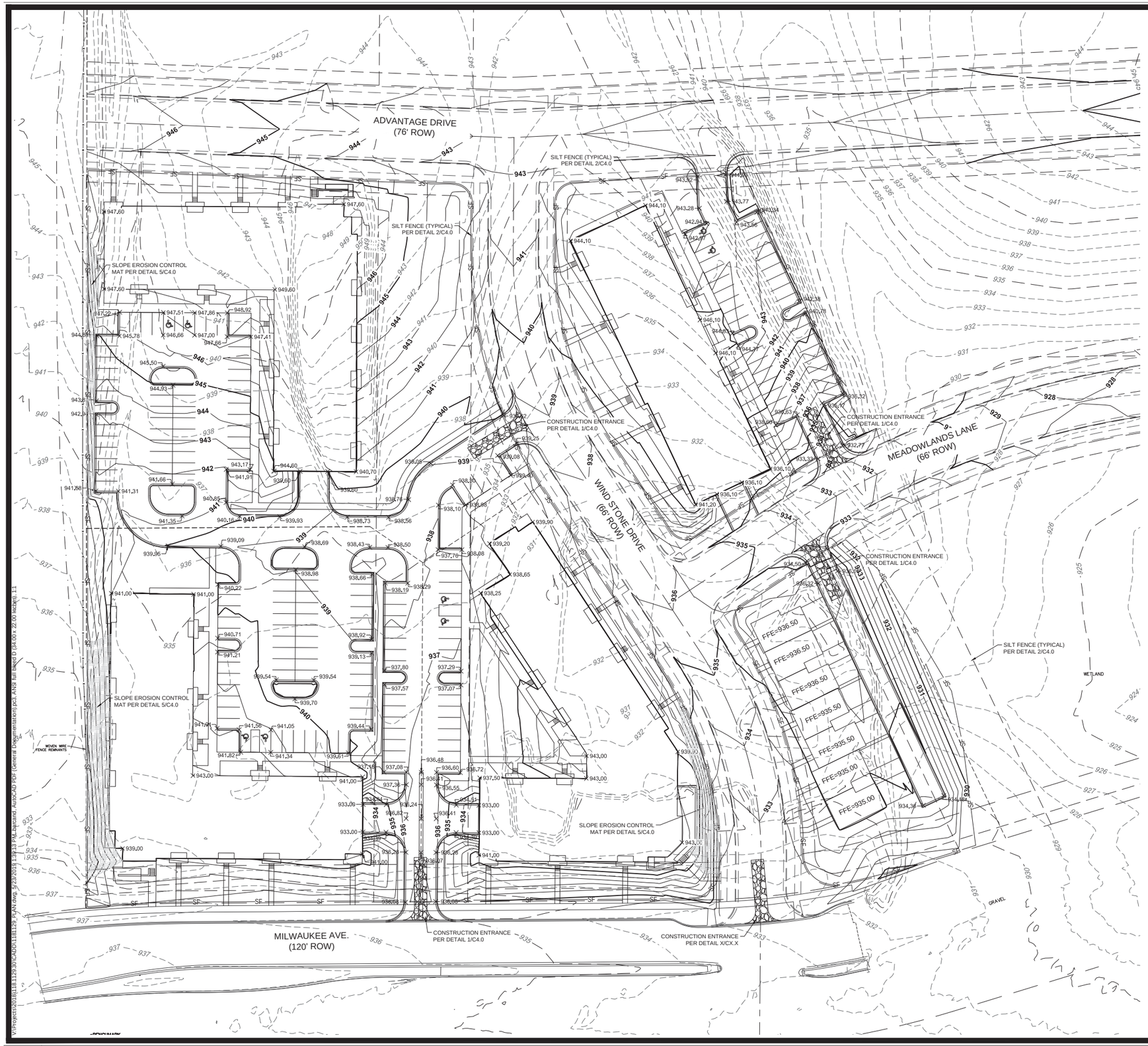

0 40
FEET

EROSION CONTROL

1. THE CONTRACTOR IS RESPONSIBLE FOR OBTAINING COPIES OF ALL PERMITS, INCLUDING WPDES DISCHARGE PERMITS (IF APPLICABLE). CONTRACTOR IS RESPONSIBLE FOR ABIDING BY ALL PERMIT REQUIREMENTS AND RESTRICTIONS.
2. ALL INSTALLATION AND MAINTENANCE OF EROSION CONTROL PRACTICES SHALL BE IN ACCORDANCE WITH THE APPLICABLE WISCONSIN DEPARTMENT OF NATURAL RESOURCES (WDNR) TECHNICAL STANDARD.
3. ALL EROSION CONTROL FACILITIES SHALL BE MAINTAINED THROUGHOUT THE DURATION OF THE PROJECT AND WARRANTY PERIOD.
4. ALL EROSION AND SEDIMENTATION CONTROL PRACTICES SHALL BE INSPECTED WEEKLY AND WITHIN 24 HOURS AFTER EVERY PRECIPITATION EVENT THAT PRODUCES 0.5 INCHES OF RAIN OR MORE DURING A 24 HOUR PERIOD. NEEDED REPAIRS WILL BE MADE IMMEDIATELY.
5. ALL DISTURBED GROUND LEFT INACTIVE FOR THIRTY DAYS OR MORE SHALL BE STABILIZED WITH TOPSOIL, SEED, AND MULCH IN ACCORDANCE WITH THE WDNR TECHNICAL STANDARDS 1059 AND 1058.
6. DISTURBED AREAS THAT CANNOT BE STABILIZED WITH A DENSE GROWTH OF VEGETATION BY SEEDING AND MULCHING DUE TO TEMPERATURE OR TIMING OF CONSTRUCTION, SHALL BE STABILIZED BY APPLYING EROSION MAT IN ACCORDANCE WITH WDNR TECHNICAL STANDARD 1050.
7. SEDIMENT WILL BE REMOVED FROM BEHIND THE SILT FENCE AND DITCH CHECKS WHEN IT REACHES HALF THE HEIGHT OF THE FENCE/BALE THE SILT FENCE AND DITCH CHECKS SHALL BE REPAIRED AS NECESSARY TO MAINTAIN A BARRIER.
8. THE CONTRACTOR IS RESPONSIBLE FOR INSTALLATION OF ANY ADDITIONAL EROSION CONTROL MEASURES NECESSARY TO PREVENT EROSION AND SEDIMENTATION. ALL DISTURBED AREAS ARE TO DRAIN TO APPROVED SEDIMENT CONTROL MEASURES AT ALL TIMES DURING SITE DEVELOPMENT UNTIL FINAL STABILIZATION IS ACHIEVED. DEPENDING ON HOW THE CONTRACTOR GRADES THE SITE, IT MAY BE NECESSARY TO INSTALL TEMPORARY SEDIMENT TRAPS IN VARIOUS LOCATIONS THROUGHOUT THE PROJECT. TEMPORARY SEDIMENT TRAPS SHALL BE DESIGNED, INSTALLED, AND MAINTAINED IN ACCORDANCE WITH WDNR TECHNICAL STANDARD 1063.
9. ANY SEDIMENT TRACKED ONTO A PUBLIC OR PRIVATE ROAD SHOULD BE REMOVED BY STREET CLEANING, NOT FLUSHING, BEFORE THE END OF EACH WORKING DAY.
10. DUST CONTROL SHALL BE PROVIDED AS NECESSARY IN ACCORDANCE WITH WDNR TECHNICAL STANDARD 1068.
11. ALL EROSION CONTROL MEASURES SHALL BE INSTALLED PRIOR TO THE START OF LAND DISTURBING ACTIVITIES.
12. REFER TO SPECIFICATION SECTIONS 31 20 00, 31 25 00, 32 91 19, AND 32 92 00.

GRADING

1. THE CONTRACTOR SHALL MAINTAIN SITE DRAINAGE THROUGHOUT CONSTRUCTION. THIS MAY INCLUDE THE EXCAVATION OF TEMPORARY DITCHES OR PUMPING TO ALLEVIATE WATER PONDING.
2. SILT FENCE AND OTHER EROSION CONTROL FACILITIES MUST BE INSTALLED PRIOR TO CONSTRUCTION OR ANY OTHER LAND DISTURBING ACTIVITY. THE CONTRACTOR SHALL BE RESPONSIBLE FOR REMOVING ALL EROSION CONTROL FACILITIES ONCE THE SITE HAS BEEN STABILIZED WITH VEGETATION AND THE APPROVAL OF THE GOVERNING AGENCY.
3. THE CONTRACTOR SHALL ASSUME SOLE RESPONSIBILITY FOR ALL GRADING, CUT AND FILL CALCULATIONS AND FOR ACTUAL LAND BALANCE, INCLUDING UTILITY TRENCH SPOIL. THE CONTRACTOR SHALL IMPORT OR EXPORT MATERIAL AS NECESSARY TO COMPLETE THE PROJECT.
4. GRADING SHALL CONSIST OF CLEARING AND GRUBBING EXISTING VEGETATION, STRIPPING TOPSOIL, REMOVAL OF EXISTING PAVEMENT OR FOUNDATIONS, IMPORTING OR EXPORTING MATERIAL TO ACHIEVE AND ON-SITE EARTHWORK BALANCE, GRADING THE BUILDING PADS AND PAVEMENT AREAS, SCARIFYING AND FINAL COMPACTION OF THE PAVEMENT SUBGRADE, AND PLACEMENT OF TOPSOIL.
5. NO FILL SHALL BE PLACED ON A WET OR SOFT SUBGRADE THE SUBGRADE SHALL BE PROOF-ROLLED AND INSPECTED BY THE ENGINEER BEFORE ANY MATERIAL IS PLACED.
6. REFER TO SPECIFICATION SECTIONS 31 20 00, 31 25 00, 32 91 19, AND 32 92 00.

MARK	REVISION	DATE	BY

Engineer: BCA | Checked By: MLC | Scale: 1" = NOTED
Technician: BCA | Date: 01-07-2019 | Field Bk: Pg:
118.1129.30 | C 2.0

MADISON, WI

5010 VOGES ROAD
MADISON, WISCONSIN 53718
608-838-0444 | www.snyder-associates.com

THE MEADOWLANDS - PHASE 11

GRADING PLAN

SNYDER & ASSOCIATES, INC.

SNYDER & ASSOCIATES

118.1129.30

C 2.0

V:\Projects\2018\118.1129.00\CADD\118129-PLAN.dwg, 5/23/2019 1:29:13 PM, bjarsund AutoCAD PDF (General Documentation).pc3, ANSI full page (3.00in x 22.00in scale), 1:1

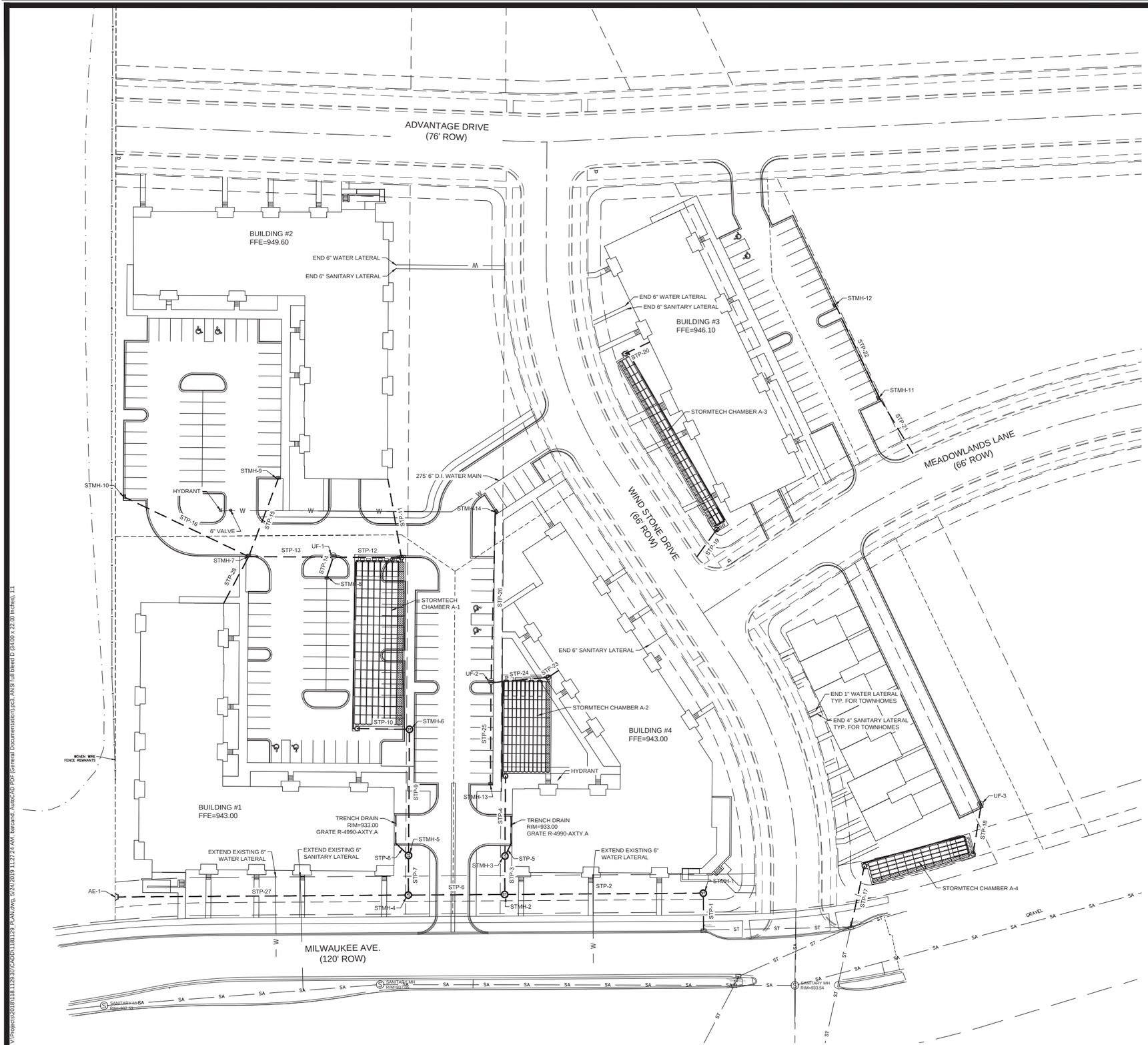

STRUCTURE TABLE					
STRUCT #	RIM EL	STRUCT TYPE	FRAME/GRATE	INVERTS IN	INVERTS OUT
AE-1	934.47	APRON ENDWALL	APRON ENDWALL	INV E = 932.39	
STMH-1	937.86	48" CONC STMH	R-1550	INV W = 929.56	INV S = 929.56
STMH-2	937.75	48" CONC STMH	R-1550	INV W = 930.35 INV N = 930.35	INV E = 930.35
STMH-3	937.55	48" CONC STMH	R-1550	INV N = 930.50 INV NE = 930.50	INV S = 930.50
STMH-4	938.23	48" CONC STMH	R-1550	INV N = 931.23	INV E = 930.73 INV W = 931.23
STMH-5	937.62	48" CONC STMH	R-1550	INV N = 931.39 INV NW = 931.39	INV S = 931.39
STMH-6	938.89	48" CONC STMH	R-1550	INV W = 932.48	INV S = 932.48
STMH-7	939.57	2' X 3' CI	R-3067	INV NW = 935.61 INV SW = 935.61 INV N = 935.61	INV E = 935.36
STMH-8	939.42	2' X 3' CI	R-3067		INV N = 936.16
STMH-9	943.03	2' X 3' CI	R-3067		INV S = 939.11
STMH-10	942.19	2' X 3' CI	R-3067		INV SE = 938.12
STMH-11	936.97	2' X 3' CI	R-1550	INV NW = 931.00	INV SE = 931.00
STMH-12	942.86	2' X 3' CI	R-1550		INV SE = 935.28
STMH-13	936.70	2' X 3' CI	R-3067		INV N = 932.66
STMH-14	938.90	2' X 3' CI	R-3067		INV S = 934.92
UF-1	939.14	UPFLOW FILTER	R-3067	INV W = 933.88 INV S = 935.64	INV E = 933.63
UF-2	937.22	UPFLOW FILTER	R-3067	INV N = 931.60 INV S = 931.60	INV E = 931.60
UF-3	934.65	UPFLOW FILTER	R-3067		INV S = 930.44

STORM PIPE TABLE								
PIPE NAME	PIPE TYPE	SIZE (IN.)	FROM	TO	LENGTH (FT)	START INV	END INV	SLOPE
STP-1	CORRUGATED HDPE	30	EX INLET		29	929.56	929.41	0.50%
STP-2	CORRUGATED HDPE	30	STMH-2	STMH-1	157	930.35	929.56	0.50%
STP-3	CORRUGATED HDPE	15	STMH-3	STMH-2	30	930.50	930.35	0.50%
STP-4	CORRUGATED HDPE	A-2		STMH-3	63	931.00	930.50	0.79%
STP-5	CORRUGATED HDPE	TRENCH DRAIN		STMH-3	11	931.00	930.50	4.72%
STP-6	CORRUGATED HDPE	30	STMH-4	STMH-2	76	930.73	930.35	0.50%
STP-7	CORRUGATED HDPE	15	STMH-5	STMH-4	31	931.39	931.23	0.50%
STP-8	CORRUGATED HDPE	TRENCH DRAIN		STMH-5	14	931.46	931.39	0.50%
STP-9	CORRUGATED HDPE	15	STMH-6	STMH-5	100	932.48	931.39	1.09%
STP-10	CORRUGATED HDPE	A-1		STMH-6	41	933.13	932.48	1.57%
STP-11	CORRUGATED HDPE	BUILDING #2	A-1		63	933.76	933.13	1.00%
STP-12	CORRUGATED HDPE	18	A-1		54	933.63	933.13	0.93%
STP-13	CORRUGATED HDPE	15	STMH-7	UF-1	67	935.36	933.88	2.21%
STP-14	CORRUGATED HDPE	12	STMH-8	UF-1	16	936.16	935.64	3.19%
STP-15	CORRUGATED HDPE	12	STMH-9	STMH-7	66	939.11	935.61	5.34%
STP-16	CORRUGATED HDPE	12	STMH-10	STMH-7	110	938.12	935.61	2.28%
STP-17	CORRUGATED HDPE	A-4	EX INLET		50	928.25	927.75	1.01%
STP-18	CORRUGATED HDPE	12	A-4		40	930.44	928.25	5.41%
STP-19	CORRUGATED HDPE	A-3	EX INLET		27	933.00	932.79	0.79%
STP-20	CORRUGATED HDPE	BUILDING #3	A-3		22	933.22	933.00	1.00%
STP-21	CORRUGATED HDPE	12	EX INLET		52	931.00	927.82	6.16%
STP-22	CORRUGATED HDPE	12	STMH-12	STMH-11	81	935.28	931.00	5.28%
STP-23	CORRUGATED HDPE	BUILDING #4	A-2		10	931.10	931.00	1.00%
STP-24	CORRUGATED HDPE	12	A-2		46	931.60	931.00	1.32%
STP-25	CORRUGATED HDPE	12	STMH-13	UF-2	81	932.66	931.60	1.31%
STP-26	CORRUGATED HDPE	12	STMH-14	UF-2	135	934.92	931.60	2.46%
STP-27	CORRUGATED HDPE	24	STMH-4	AE-1	232	931.23	932.39	0.50%
STP-28	CORRUGATED HDPE	BUILDING #1		STMH-7	42	935.95	935.61	0.81%
TRENCH DRAIN 1	CORRUGATED HDPE	6			22	931.11	931.00	0.50%
TRENCH DRAIN 2	CORRUGATED HDPE	6			22	931.57	931.46	0.50%

MARK	REVISION	DATE	BY

Engineer: BCA
Technician: BCA
Checked By: MLC
Date: 01-07-2019
Scale: 1" = NOTED
Field Bk: Pg:
118.1129.30
C 3.0

MADISON, WI

5010 VOGES ROAD
MADISON, WISCONSIN 53718
608-838-0444 | www.snyder-associates.com

THE MEADOWLANDS - PHASE 11

UTILITY PLAN

SNYDER & ASSOCIATES, INC.

SNYDER & ASSOCIATES

118.1129.30

C 3.0

V:\Projects\2018\118.1129.30\CADD\118.1129_PLAN.dwg, 9/24/2019 12:27:24 AM, bacarad, AutoCAD PDF (General Documentation).pc3, ANSI full bleed D (34.00 x 22.00 Inches), 1:1

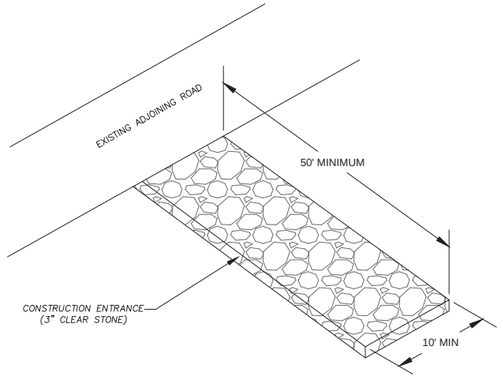

GENERAL NOTES:

1. CONSTRUCTION ENTRANCE TO BE INSTALLED PRIOR TO ANY TRAFFIC LEAVING THE SITE.
2. THE AGGREGATE FOR THE CONSTRUCTION ENTRANCE SHALL BE 3 INCH CLEAR OR WASHED STONE.
3. AGGREGATE SHALL BE PLACED IN A LAYER AT LEAST 12 INCHES THICK.
4. THE CONSTRUCTION ENTRANCE SHALL BE UNDERLAIN WITH A WDOT TYPE HR OR FF GEOTEXTILE FABRIC TO PREVENT MIGRATION OF UNDERLYING SOIL INTO THE STONE.
5. SURFACE WATERS MUST BE PREVENTED FROM PASSING THROUGH THE CONSTRUCTION ENTRANCE. FLOWS SHALL BE DIVERTED AWAY FROM THE CONSTRUCTION ENTRANCE OR CONVEYED UNDER AND AROUND THEM BY USE OF A CULVERT. DIVERSION BERM OR OTHER PRACTICES AS APPROVED BY THE CONSTRUCTION ENGINEER.
6. CLEANING BY SCRAPING OR ADDING NEW STONE SHALL BE REQUIRED IF ENTRANCE BECOMES MORE THAN 50% COVERED BY TRACKED MUD.

1 / C4.0 CONSTRUCTION ENTRANCE
SCALE: NTS

GENERAL NOTES
MANUFACTURED ALTERNATIVES APPROVED AND LISTED ON THE WisDOT'S EROSION CONTROL PRODUCT ACCEPTABILITY LIST MAY BE SUBSTITUTED.

CLEANING SHALL BE REQUIRED WHEN SEDIMENT OR STANDING WATER IS WITHIN 6" OF OVERFLOW HOLES OR AS DIRECTED BY THE CONSTRUCTION ENGINEER.

WHEN REMOVING OR MAINTAINING INLET PROTECTION. CARE SHALL BE TAKEN SO THAT THE SEDIMENT TRAPPED ON THE GEOTEXTILE FABRIC DOES NOT FALL INTO THE INLET. ANY MATERIAL FALLING INTO THE INLET SHALL BE REMOVED IMMEDIATELY.

THE INSTALLED BAG SHALL HAVE A MINIMUM SIDE CLEARING BETWEEN THE INLET WALLS AND THE BAG, MEASURED AT THE BOTTOM OF THE OVERFLOW HOLES, OF 3". WHERE NECESSARY THE CONTRACTOR SHALL CINCH THE BAG. USING PLASTIC ZIP TIES. TO ACHIEVE THE 3" CLEARANCE. THE TIES SHALL BE PLACED AT A MAXIMUM OF 4" FROM THE BOTTOM OF THE BAG.

1. TRIM EXCESS FABRIC IN THE FLOW LINE TO WITHIN 3" OF THE GRATE.
2. FOR INLET PROTECTION WITH CURB BOX AN ADDITIONAL 18" OF FABRIC IS WRAPPED AROUND THE WOOD AND SECURED WITH STAPLES. THE WOOD SHALL NOT BLOCK THE ENTIRE HEIGHT OF THE CURB BOX OPENING.
3. FLAP POCKETS SHALL BE LARGE ENOUGH TO ACCEPT WOOD 2X4.

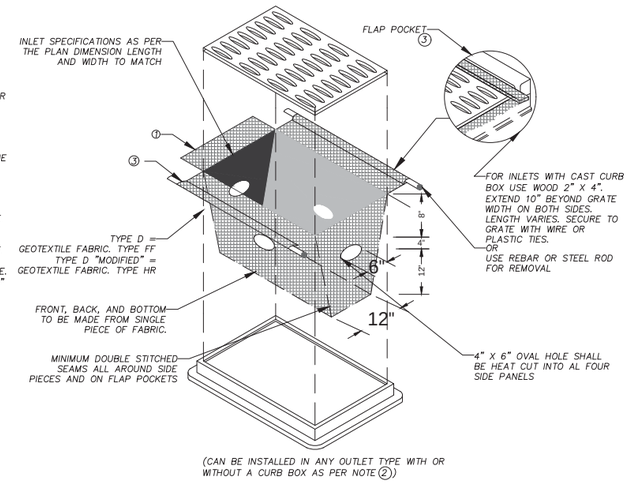

3 / C4.0 INLET PROTECTION TYPE "D" DETAIL
SCALE: NTS

EROSION CONTROL NOTES

1. THE CONTRACTOR IS RESPONSIBLE FOR OBTAINING COPIES OF ALL PERMITS, INCLUDING WISDNR WPDES DISCHARGE PERMIT (IF APPLICABLE), COUNTY AND LOCAL EROSION CONTROL PERMIT. CONTRACTOR IS RESPONSIBLE FOR ABIDING BY ALL PERMIT REQUIREMENTS AND RESTRICTIONS.
2. ALL EROSION CONTROL MEASURES SHALL BE INSTALLED PRIOR TO LAND DISTURBING ACTIVITIES.
3. ALL INSTALLATION AND MAINTENANCE OF EROSION CONTROL PRACTICES SHALL BE IN ACCORDANCE WITH THE APPLICABLE WISCONSIN DEPARTMENT OF NATURAL RESOURCES (WDNR) TECHNICAL STANDARD, FOUND AT: http://dnr.wi.gov/topic/stormwater/standards/const_standards.html OR THE WISCONSIN CONSTRUCTION SITE BEST MANAGEMENT PRACTICE HANDBOOK IF A TECHNICAL STANDARD IS NOT AVAILABLE.
4. ALL EROSION CONTROL FACILITIES SHALL BE MAINTAINED THROUGHOUT THE DURATION OF THE PROJECT AND WARRANTY PERIOD IN CONFORMANCE WITH ALL APPLICABLE PERMITS ISSUED FOR THE PROJECT.
5. ALL EROSION AND SEDIMENTATION CONTROL PRACTICES SHALL BE INSPECTED WEEKLY AND WITHIN 24 HOURS AFTER EVERY PRECIPITATION EVENT THAT PRODUCES 0.5 INCHES OF RAIN OR MORE DURING A 24 HOUR PERIOD. REPAIRS SHALL BE MADE IMMEDIATELY TO EROSION CONTROL PRACTICES AS NECESSARY.
6. TEMPORARY STOCKPILES SHALL BE STABILIZED IF NOT REMOVED IN 10 DAYS. PERIMETER CONTROL ON THE DOWNHILL SIDE SHALL BE IN PLACE AT ALL TIMES (SILT FENCE OR APPROVED EQUAL).
7. TEMPORARY SEED MIXTURE SHALL CONFORM TO 630.2.1.5.1.4 OF THE WISDOT STANDARD SPECIFICATIONS USE WINTER WHEAT OR RYE FOR FALL PLANTINGS STARTED AFTER SEPTEMBER 1.
8. DISTURBED AREAS THAT CANNOT BE STABILIZED WITH A DENSE GROWTH OF VEGETATION BY SEEDING AND MULCHING DUE TO TEMPERATURE OR TIMING OF CONSTRUCTION, SHALL BE STABILIZED BY APPLYING ANIONIC POLYACRYLAMIDE (PAM) IN ACCORDANCE WITH WDNR TECHNICAL STANDARD 1050.
9. SEDIMENT SHALL BE REMOVED FROM THE SEDIMENT BASINS TO MAINTAIN A THREE FOOT DEPTH OF TREATMENT, MEASURED BELOW THE NORMAL WATER ELEVATION. SEDIMENT WILL BE REMOVED FROM THE DIVERSION DITCHES WHEN IT REACHES HALF THE HEIGHT OF THE DITCH. SEDIMENT WILL BE REMOVED FROM BEHIND THE SILT FENCE AND DITCH CHECKS WHEN IT REACHES HALF THE HEIGHT OF THE FENCE/BALE THE SILT FENCE AND DITCH CHECKS SHALL BE REPAIRED AS NECESSARY TO MAINTAIN A BARRIER.
10. ALL WATER FROM CONSTRUCTION DEWATERING SHALL BE TREATED IN ACCORDANCE WITH WDNR TECHNICAL STANDARD 1061 PRIOR TO DISCHARGE TO WATERS OF THE STATE, WETLANDS, OR OFFSITE.
11. THE CONTRACTOR IS RESPONSIBLE FOR INSTALLATION OF ANY ADDITIONAL EROSION CONTROL MEASURES NECESSARY TO PREVENT EROSION AND SEDIMENTATION. ALL DISTURBED AREAS ARE TO DRAIN TO APPROVED SEDIMENT CONTROL MEASURES AT ALL TIMES DURING SITE DEVELOPMENT UNTIL FINAL STABILIZATION IS ACHIEVED. DEPENDING ON HOW THE CONTRACTOR GRADES THE SITE, IT MAY BE NECESSARY TO INSTALL TEMPORARY EROSION CONTROL AND/OR SEDIMENT TRAPS IN VARIOUS LOCATIONS THROUGHOUT THE PROJECT. TEMPORARY SEDIMENT TRAPS SHALL BE DESIGNED, INSTALLED, AND MAINTAINED IN ACCORDANCE WITH WDNR TECHNICAL STANDARD 1063.
12. TRACKED MATERIAL TO ADJACENT STREETS SHALL BE COLLECTED AT THE END OF EACH WORKING DAY OR AS REQUIRED BY THE LOCAL MUNICIPALITY.
13. DUST CONTROL SHALL BE PROVIDED AS NECESSARY IN ACCORDANCE WITH WDNR TECHNICAL STANDARD 106B.
14. FINAL STABILIZATION OF LANDSCAPED AREAS SHALL BE IN ACCORDANCE WITH THE APPROVED LANDSCAPE PLAN.
15. ALL SEEDED AREAS WILL BE FERTILIZED, RESEEDED AS NECESSARY, AND MULCHED ACCORDING TO SPECIFICATIONS IN THE APPROVED LANDSCAPE PLAN TO MAINTAIN A VIGOROUS DENSE VEGETATIVE COVER.
16. THE CONTRACTOR IS RESPONSIBLE FOR PROVIDING ALL EROSION CONTROL FACILITIES AND MEASURES NECESSARY TO CONTROL EROSION AND SEDIMENTATION AT THE PROJECT SITE. THESE FACILITIES AND MEASURES MAY OR MAY NOT BE SHOWN ON THE DRAWINGS AND THEIR ABSENCE ON THE DRAWINGS DOES NOT ALLEVIATE THE CONTRACTOR FROM PROVIDING THEM. ANY MEASURES AND FACILITIES SHOWN ON THE DRAWINGS ARE THE MINIMUM ACTIONS REQUIRED.
17. ERODED MATERIAL THAT HAS LEFT THE CONSTRUCTION SITE SHALL BE COLLECTED AND RETURNED TO THE SITE BY THE CONTRACTOR.
18. AFTER FINAL VEGETATION IS ESTABLISHED, REMOVE ALL EROSION CONTROL FACILITIES. RESTORE AREAS DISTURBED BY THE REMOVALS.
19. KEEP A COPY OF THE CURRENT EROSION CONTROL PLAN ON SITE THROUGHOUT THE DURATION OF THE PROJECT.
20. COMPLETE AND STABILIZE SEDIMENT BASINS/TRAPS PRIOR TO MASS LAND DISTURBANCE TO CONTROL RUNOFF DURING CONSTRUCTION. REMOVE SEDIMENT AS NEEDED TO MAINTAIN 3 FEET OF DEPTH TO THE OUTLET, AND PROPERLY DISPOSE OF SEDIMENT REMOVED DURING MAINTENANCE. CONSTRUCT AND MAINTAIN THE SEDIMENT BASIN PER WDNR TECHNICAL STANDARDS.
21. PROPERLY DISPOSE OF ALL WASTE AND UNUSED BUILDING MATERIALS (INCLUDING GARBAGE, DEBRIS, CLEANING WASTES, OR OTHER CONSTRUCTION MATERIALS) AND DO NOT ALLOW THESE MATERIALS TO BE CARRIED BY RUNOFF INTO THE RECEIVING CHANNEL.
22. MAKE PROVISIONS FOR WATERING DURING THE FIRST 8 WEEKS FOLLOWING SEEDING OR PLANTING OF DISTURBED AREAS WHENEVER MORE THAN 7 CONSECUTIVE DAYS OF DRY WEATHER OCCUR.

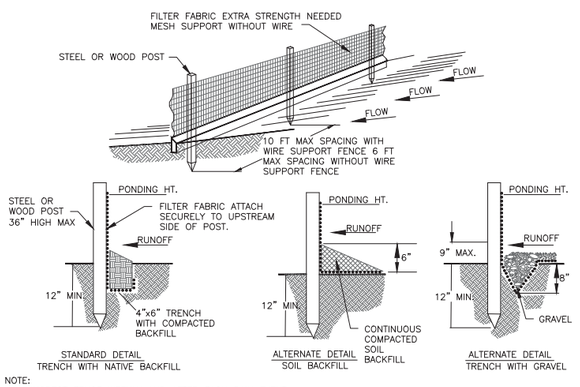

NOTE:

1. INSPECT FENCE WEEKLY AND AFTER EACH RAIN EVENT OF 0.5 INCHES AND REPAIR IF REQUIRED. REMOVE SEDIMENT WHEN NECESSARY OR WHEN SEDIMENT REACHES ½ OF FENCE HEIGHT.
2. REMOVED SEDIMENT SHALL BE DEPOSITED TO AN AREA THAT WILL NOT CONTRIBUTE SEDIMENT OFF-SITE AND CAN BE PERMANENTLY STABILIZED.
3. SILT FENCE SHALL BE PLACED ON SLOPE CONTOURS TO MAXIMIZE PONDING EFFICIENCY.
4. SILT FENCE SHALL BE INSTALLED AND MAINTAINED IN ACCORDANCE WITH WDNR TECHNICAL STANDARD 1056.

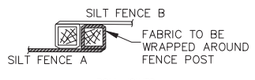

ROLL JOINTS

2 / C4.0 SILT FENCE DETAIL
SCALE: NTS

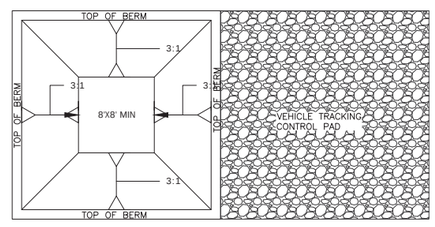

PLAN VIEW

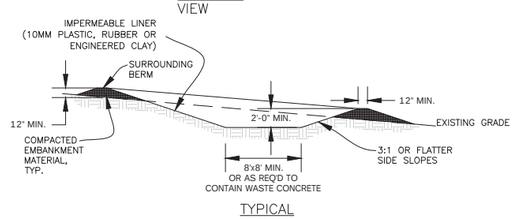

TYPICAL SECTION

CONCRETE WASHOUT AREA INSTALLATION NOTES

1. SEE EROSION CONTROL PLAN FOR LOCATIONS OF CONCRETE WASHOUT AREA(S). TO BE PLACED A MIN. OF 50' FROM DRAINAGEWAYS, BODIES OF WATER, AND INLETS.)
2. THE CONCRETE WASHOUT AREA(S) SHALL BE INSTALLED PRIOR TO ANY CONCRETE PLACEMENT ON SITE.
3. VEHICLE TRACKING CONTROL PAD IS REQ'D AT THE ACCESS POINT(S).
4. SIGNS SHALL BE PLACED AT THE CONSTRUCTION ENTRANCE, AT THE WASHOUT AREA(S), AND ELSEWHERE AS NECESSARY TO CLEARLY INDICATE THE LOCATION OF THE CONCRETE WASHOUT AREAS TO OPERATORS OF CONCRETE TRUCKS AND PUMP RIGS.
5. EXCAVATED MATERIAL SHALL BE UTILIZED IN PERIMETER BERM CONSTRUCTION.

CONCRETE WASHOUT AREA MAINTENANCE NOTES

6. THE CONCRETE WASHOUT AREA SHALL BE REPAIRED AND ENLARGED OR CLEANED OUT AS NECESSARY TO MAINTAIN CAPACITY FOR WASTED CONCRETE
7. AT THE END OF CONSTRUCTION, ALL CONCRETE SHALL BE REMOVED FROM SITE AND DISPOSED OF AT AN APPROVED WASTE SITE.
8. WHEN CONCRETE WASHOUT AREA(S) IS REMOVED, THE DISTURBED AREA SHALL BE STABILIZED PER SITE EROSION CONTROL MEASURES.
9. INSPECT WEEKLY AND DURING AND AFTER ALL STORM EVENTS. CLEAN-OUT OR COVER WASHOUT AREA PRIOR TO PREDICTED STORM EVENTS TO PREVENT OVER-FLOW.

4 / C4.0 CONCRETE WASHOUT AREA
SCALE: NTS

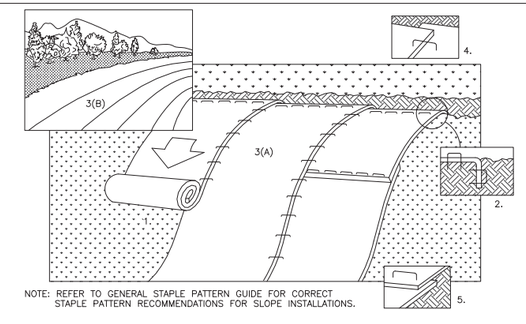

NOTE: REFER TO GENERAL STAPLE PATTERN GUIDE FOR CORRECT STAPLE PATTERN RECOMMENDATIONS FOR SLOPE INSTALLATIONS.

1. PREPARE SOIL BEFORE INSTALLING BLANKETS, INCLUDING APPLICATION OF FERTILIZER AND SEED. NOTE: WHEN USING CELL-O-SEED DO NOT SEED PREPARED AREA. CELL-O-SEED MUST BE INSTALLED WITH PAPER SIDE DOWN.
2. BEGIN AT THE TOP OF THE SLOPE BY ANCHORING THE BLANKET IN 6" DEEP X 6" WIDE TRENCH. BACKFILL AND COMPACT THE TRENCH AFTER STAPLING.
3. ROLL THE BLANKETS (A.) DOWN OR (B.) HORIZONTALLY ACROSS THE SLOPE.
4. THE EDGES OF PARALLEL BLANKETS MUST BE STAPLED WITH APPROXIMATELY 2" OVERLAP.
5. WHEN BLANKETS MUST BE SPLICED DOWN THE SLOPE, PLACE BLANKETS END OVER END (SHINGLE STYLE) WITH APPROXIMATELY 4" OVERLAP. STAPLE THROUGH OVERLAPPED AREA, APPROXIMATELY 12" APART.
6. ALL BLANKETS MUST BE SECURELY FASTENED TO THE SLOPE BY PLACING STAPLES/STAKES IN APPROPRIATE LOCATIONS AS RECOMMENDED BY THE MANUFACTURER.
7. EROSION MAT SHALL BE INSTALLED AND MAINTAINED IN ACCORDANCE WITH WDNR TECHNICAL STANDARD # 1052.

5 / C4.0 EROSION CONTROL MAT - SLOPE INSTALLATION
SCALE: NTS

MARK	REVISION	DATE	BY

Engineer: BCA | Checked By: MLC | Scale: 1" = NOTED
Technician: BCA | Date: 01-07-2019 | Field Bk: | Pg:
118.1129.30 | C 4.0

MADISON, WI

5010 VOGES ROAD
MADISON, WISCONSIN 53718
608-838-0444 | www.snyder-associates.com

THE MEADOWLANDS - PHASE 11

EROSION DETAILS

SNYDER & ASSOCIATES, INC.

SNYDER & ASSOCIATES

118.1129.30

C 4.0

V:\Projects\3018\118.1129.30\CADD\118129-PLAN.dwg, 5/23/2019 1:58:06 PM, bacsand, AutoCAD PDF (General Documentation).pc3, ANSI full bleed D (34.00 x 22.00 Inches), 1:1

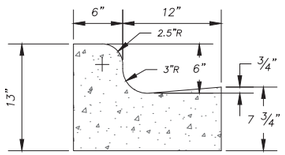

STANDARD

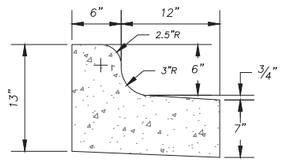

REJECT

NOTES:

1. LATERAL CONTRACTION JOINTS SHALL BE PLACED AT INTERVALS OF NOT MORE THAN 15' NOR LESS THAN 6' IN LENGTH. THE JOINTS SHALL BE A MINIMUM OF 3" IN DEPTH EXPANSION JOINTS SHALL BE PLACED TRANSVERSELY AT RADIUS POINTS ON CURVES OF RADIUS 200' OR LESS, AND AT ANGLE POINTS, OR AS DIRECTED BY THE ENGINEER.
2. THE EXPANSION JOINT SHALL BE A ONE PIECE ASPHALTIC MATERIAL HAVING THE SAME DIMENSIONS AS CURB & GUTTER AT THAT STATION AND BE 1/2" THICK. IN ALL CASES, CONCRETE CURB & GUTTER SHALL BE PLACED ON THOROUGHLY COMPACTED CRUSHED STONE.

1 / C4.1 CONCRETE CURB & GUTTER
SCALE: NTS

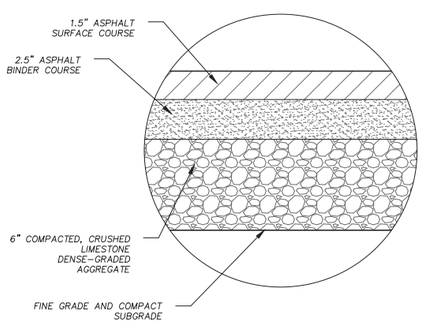

2 / C4.1 LIGHT DUTY ASPHALT PAVING DETAIL
SCALE: NTS

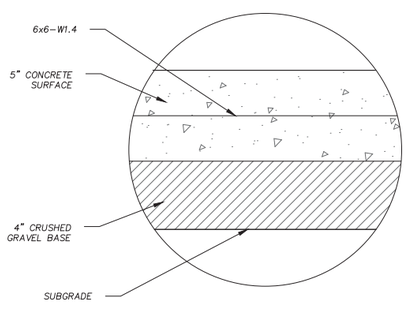

3 / C4.1 DUMPSTER PAD LOADING CONCRETE DETAIL
SCALE: NTS

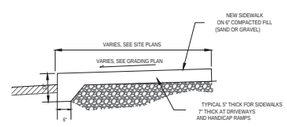

THICKENED EDGE

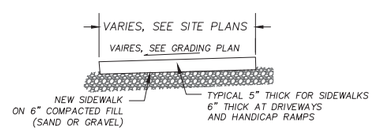

TYPICAL

4 / C4.1 CONCRETE SIDEWALK DETAILS
SCALE: NTS

PAVEMENT AND CURB NOTES

1. THE IMPROVEMENTS SHALL BE CONSTRUCTED ACCORDING TO THE WISCONSIN D.O. T. STANDARD SPECIFICATIONS FOR HIGHWAY AND STRUCTURE CONSTRUCTION, LA TEST EDITION, AND THE LOCAL ORDINANCES AND SPECIFICATIONS.
2. PAVING SHALL CONSIST OF FINE GRADING PAVEMENT AREAS, INSTALLATION OF CRUSHED STONE BASE, CONCRETE AND/OR BITUMINOUS PAVEMENT, PAVEMENT MARKING, AND CLEANUP. ALL MATERIALS SHALL BE PROVIDED BY THE CONTRACTOR.
3. AGGREGATES USED IN THE CRUSHED AGGREGATE BASE SHALL BE (*-INCH) DENSE GRADED BASE IN ACCORDANCE WITH SUBSECTION 305.2.2 OF THE STANDARD SPECIFICATIONS.
4. HOT MIX ASPHALT PAVEMENT (HMA) SHALL BE SUPERPAVE (E-**) IN ACCORDANCE WITH SECTION 460 OF THE STANDARD SPECIFICATIONS.
5. ASPHALTIC MATERIALS SHALL BE PERFORMANCE GRADED (PG) BINDERS IN ACCORDANCE WITH SECTION 455 OF THE STANDARD SPECIFICATIONS. UPPER LAYERS SHALL BE PG(***), AND LOWER LAYERS SHALL BE PG(***).
6. AGGREGATES USED IN THE HMA SHALL BE IN ACCORDANCE WITH SUBSECTION 460.2.2.3 OF THE STANDARD SPECIFICATIONS. THE NOMINAL AGGREGATE SIZE FOR THE UPPER LAYER PAVEMENT SHALL BE (****), AND THE LOWER LAYER PAVEMENT SHALL BE (****).
7. TACK COAT SHALL BE IN ACCORDANCE WITH SUBSECTION 455.2.5 OF THE STANDARD SPECIFICATIONS. THE RATE OF APPLICATION SHALL BE 0.025 GAL/SY.
8. CONCRETE FOR CURB, DRIVEWAY, WALKS AND NON-FLOOR SLABS SHALL BE GRADE A (OR GRADE A2 IF PLACING BY SLIP-FORMED PROCESS) AIR ENTRAINED IN ACCORDANCE WITH SECTION 501 FOR THE STANDARD SPECIFICATIONS, WITH A MINIMUM 28 DA Y COMPRESSIVE STRENGTH OF 3,500 PSI.
9. CONCRETE CONSTRUCTION SHALL BE IN ACCORDANCE WITH THE FOLLOWING SECTIONS OF THE STANDARD SPECIFICATIONS:
   SECTION 415 FOR CONCRETE PAVEMENT
   SECTION 601 FOR CONCRETE CURB AND GUTTER
   SECTION 602 FOR CONCRETE SIDEWALKS.
10. ALL FINISHED CONCRETE SHALL BE COVERED WITH A LIQUID CURING COMPOUND CONFORMING TO AASHTO M 148, TYPE 2, IN ACCORDANCE WITH SECTION 415 OF THE STANDARD SPECIFICATIONS.
11. PAVEMENT MARKINGS SHALL BE PAINT IN ACCORDANCE WITH SECTION 646 OF THE STANDARD SPECIFICATIONS. (COLOR SHALL BE AS INDICATED ON THE PLANS.) THE FOLLOWING ITEMS SHALL BE PAINTED WITH COLORS NOTED BELOW:
    PARKING STALLS: WHITE
    PEDESTRIAN CROSSWALKS: WHITE
    LANE STRIPING WHERE SEPARATING TRAFFIC IS MOVING IN OPPOSITE DIRECTIONS: YELLOW
    LANE STRIPING WHERE SEPARATING TRAFFIC IS MOVING IN SAME DIRECTIONS: WHITE
    ADA SYMBOLS: BLUE OR PER LOCAL CODE
    FIRE LANES: PER LOCAL CODE
    EXTERIOR SIDEWALK CURBED, LIGHT POLE BASES, AND GUARD POSTS: YELLOW

NOTE: PAVEMENT SHALL BE DESIGNED BY GEOTECHNICAL ENGINEER. MISSING INFORMATION ABOVE, DESIGNATED WITH (*), SHALL BE FILLED IN PER GEOTECHNICAL REPORT. CAUTION: INFORMATION BELOW SHALL BE USED ONLY AS A GUIDE.

* DENSE GRADED BASE GRADATIONS: 3-INCH, 1 1/4-INCH, OR 3/4-INCH (TYPICALLY 1 1/4-INCH)

** HMA SUPERPAVE TYPES: E-0.3, E-1, E-3, E-10, E-30 (TYPICALLY E-0.3 OR E-1 FOR MOST RESIDENTIAL AND COMMERCIAL PROJECTS)

*** PG BINDERS:
64-22 BASIC ASPHALT, TYPICALLY USED FOR PARKING LOTS
58-28 RECOMMENDED FOR OVERLAY PROJECTS
64-28 POLYMER ADDED, HIGH COST ASPHALT, LARGEST RANGE OF TEMP.
UPPER LAYER PG64-28, PG64-22, OR PG58-28
LOWER LAYER PG64-22 (IF UPPER LAYER IS PG64-xx OR HIGHER), OR PG58-28

**** HMA AGGREGATE GRADATIONS: 37.5 MM, 25.0 MM, 19.0 MM, 12.5 MM, 9.5 MM (TYPICALL Y: 12.5 MM FOR UPPER LAYER, 19.0 MM FOR LOWER LAYER)

MARK	REVISION	DATE	BY

Engineer: BCA | Checked By: MLC | Scale: 1" = NOTED
Technician: BCA | Date: 01-07-2019 | Field Bk: | Pg:
118.1129.30 | C 4.1

MADISON, WI

THE MEADOWLANDS - PHASE 11

SITE DETAILS

SNYDER & ASSOCIATES, INC.
5010 VOGES ROAD
MADISON, WISCONSIN 53718
608-838-0444 | www.snyder-associates.com

SNYDER & ASSOCIATES

118.1129.30

C 4.1

V:\Projects\2018\118112930\CADD\118112930_PLAN.dwg, 6/29/2019 1:58:32 PM, bascand, AutoCAD PDF (General Documentation).pc3, ANSI full bleed D (34.00 x 22.00 Inches), 1:1

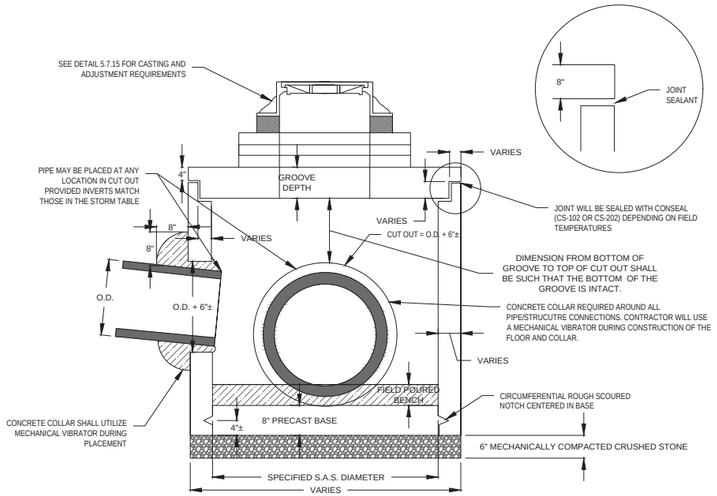

PROFILE VIEW

1 C4.2 PRECAST STORM SEWER
SCALE: NTS

NOTE: ALL STORM SEWER ACCESS STRUCTURES (S.A.S.) SHALL BE CONSTRUCTED IN COMPLIANCE WITH ASTM C478.

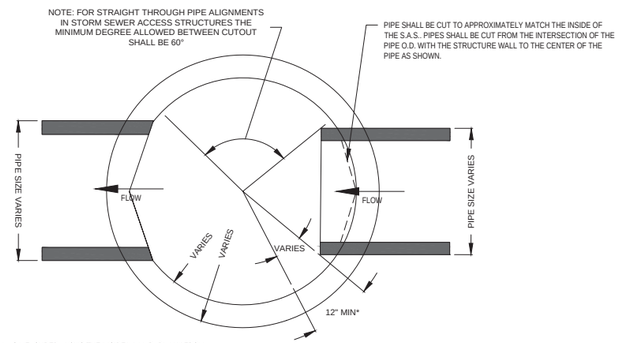

* 12" OF CONCRETE MINIMUM, AS MEASURED ALONG THE INSIDE WALL RADIALLY FROM THE CLOSEST POINT BETWEEN CUTOUTS, SHALL BE PROVIDED IN THE DESIGN OF ALL PRECAST SEWER ACCESS STRUCTURES. WHEN MEASURED IN THE FIELD THIS DIMENSION SHALL BE ALLOWED TO BE 10" DUE TO MANUFACTURING TOLERANCES. STRUCTURES WITH LESS THAN 10" SHALL ONLY BE ALLOWED WITH THE CONSTRUCTION ENGINEER'S APPROVAL.

** PIPES SHOWN IN VARIOUS CONSTRUCTION STAGES FOR ILLUSTRATIVE PURPOSES.

PLAN VIEW

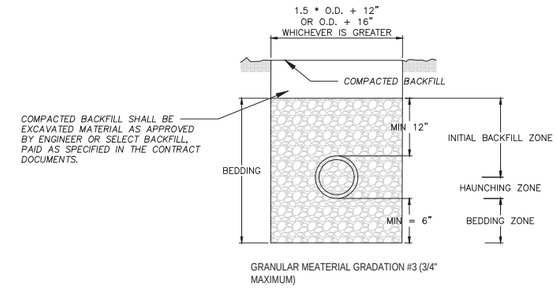

NOTES:

UNLESS OTHERWISE SPECIFIED, ALL SANITARY AND STORM SEWER PIPES, INCLUDING LATERALS AND LEADS, SHALL BE INSTALLED WITH THE TYPE OF BEDDING SHOWN FOR THE TYPE AND SIZE OF PIPE INSTALLED.

THE COST OF BEDDING SHALL BE INCLUDED IN THE UNIT PRICES BID FOR THE PIPE. FOR RCP, BEDDING INCLUDES THE HAUNCHING & BEDDING ZONES. FOR PLASTIC PIPES, THE BEDDING INCLUDES THE HAUNCHING, BEDDING & INITIAL BACKFILL ZONES. THE BEDDING SHALL BE INSTALLED & COMPACTED IN 6" MAXIMUM LIFTS.

ALL TRENCHES SHALL BE HAND BACKFILLED TO A POINT 12" ABOVE THE TOP OF THE PIPE. ALL BEDDING SHALL BE MECHANICALLY COMPACTED.

PAYMENT SHALL NOT BE MADE FOR BACKFILL WITH EXCAVATED MATERIAL, IF APPROVED. SELECT FILL IF REQUIRED. SHALL BE PAID PER CONTRACT.

THE MAXIMUM ALLOWABLE TRENCH WIDTH SHALL BE O.D. +24" AND MINIMUM OF O.D. +16" AS SPECIFIED, AND SHALL APPLY FROM THE BOTTOM OF THE TRENCH TO A POINT 12" ABOVE THE TOP OF THE PIPE. WHERE THIS WIDTH IS EXCEEDED, THE CONTRACTOR SHALL FURNISH AND INSTALL A HIGHER TYPE OF BEDDING AT NO EXTRA COST. THE TYPE OF BEDDING SHALL BE DETERMINED BY THE ENGINEER.

O.D. EQUALS THE OUTSIDE DIAMETER OF THE PIPE.

2 C4.2 STORM PIPE BEDDING AND BACKFILL
SCALE: NTS

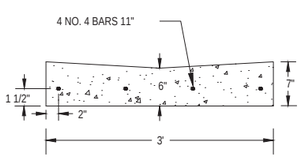

3 C4.2 V-GUTTER DETAIL
SCALE: NTS

V:\Projects\30\118\1129.30\CAD\118129_PLAN.dwg, 5/23/2019 1:59:06 PM, bartand, AutoCAD PDF (General Documentation).pc3, ANSI full bleed (34.00x22.00 inches), 1:1

MARK	REVISION	DATE	BY

Engineer: BCA | Checked By: MLC | Scale: 1" = NOTED
Technician: BCA | Date: 01-07-2019 | Field Bk: Pg:
118.1129.30 | C 4.2

MADISON, WI

5010 VOGES ROAD
MADISON, WISCONSIN 53718
608-838-0444 | www.snyder-associates.com

THE MEADOWLANDS - PHASE 11

UTILITY DETAILS

SNYDER & ASSOCIATES, INC.

SNYDER & ASSOCIATES

118.1129.30

C 4.2

ADVANCED DRAINAGE SYSTEMS, INC.

SiteASSIST™ by StormTech

FOR STORMTECH INSTRUCTIONS, DOWNLOAD THE INSTALLATION APP

The Meadowlands (A-1)

Madison, WI

STORMTECH CHAMBER SPECIFICATIONS

1. CHAMBERS SHALL BE STORMTECH SC-740, SC-310, OR APPROVED EQUAL.
2. CHAMBERS SHALL BE MANUFACTURED FROM VIRGIN POLYPROPYLENE OR POLYETHYLENE RESINS.
3. CHAMBER ROWS SHALL PROVIDE CONTINUOUS, UNOBSTRUCTED INTERNAL SPACE WITH NO INTERNAL SUPPORT PANELS THAT WOULD IMPEDE FLOW OR LIMIT ACCESS FOR INSPECTION.
4. THE STRUCTURAL DESIGN OF THE CHAMBERS, THE STRUCTURAL BACKFILL, AND THE INSTALLATION REQUIREMENTS SHALL ENSURE THAT THE LOAD FACTORS SPECIFIED IN THE AASHTO LRFD BRIDGE DESIGN SPECIFICATIONS, SECTION 12.12, ARE MET FOR: 1) LONG-DURATION DEAD LOADS AND 2) SHORT-DURATION LIVE LOADS, BASED ON THE AASHTO DESIGN TRUCK WITH CONSIDERATION FOR IMPACT AND MULTIPLE VEHICLE PRESENCES.
5. CHAMBERS SHALL MEET ASTM F2922 (POLYETHYLENE) OR ASTM F2418 (POLYPROPYLENE), "STANDARD SPECIFICATION FOR THERMOPLASTIC CORRUGATED WALL STORMWATER COLLECTION CHAMBERS".
6. CHAMBERS SHALL BE DESIGNED AND ALLOWABLE LOADS DETERMINED IN ACCORDANCE WITH ASTM F2787, "STANDARD PRACTICE FOR STRUCTURAL DESIGN OF THERMOPLASTIC CORRUGATED WALL STORMWATER COLLECTION CHAMBERS".
7. ONLY CHAMBERS THAT ARE APPROVED BY THE SITE DESIGN ENGINEER WILL BE ALLOWED. THE CHAMBER MANUFACTURER SHALL SUBMIT THE FOLLOWING UPON REQUEST TO THE SITE DESIGN ENGINEER FOR APPROVAL BEFORE DELIVERING CHAMBERS TO THE PROJECT SITE:
   a. A STRUCTURAL EVALUATION SEALED BY A REGISTERED PROFESSIONAL ENGINEER THAT DEMONSTRATES THAT THE SAFETY FACTORS ARE GREATER THAN OR EQUAL TO 1.95 FOR DEAD LOAD AND 1.75 FOR LIVE LOAD, THE MINIMUM REQUIRED BY ASTM F2787 AND BY AASHTO FOR THERMOPLASTIC PIPE.
   b. A STRUCTURAL EVALUATION SEALED BY A REGISTERED PROFESSIONAL ENGINEER THAT DEMONSTRATES THAT THE LOAD FACTORS SPECIFIED IN THE AASHTO LRFD BRIDGE DESIGN SPECIFICATIONS, SECTION 12.12, ARE MET. THE 50 YEAR CREEP MODULUS DATA SPECIFIED IN ASTM F2418 OR ASTM F2922 MUST BE USED AS PART OF THE AASHTO STRUCTURAL EVALUATION TO VERIFY LONG-TERM PERFORMANCE.
   c. STRUCTURAL CROSS SECTION DETAIL ON WHICH THE STRUCTURAL EVALUATION IS BASED.
8. CHAMBERS AND END CAPS SHALL BE PRODUCED AT AN ISO 9001 CERTIFIED MANUFACTURING FACILITY.

IMPORTANT - NOTES FOR THE BIDDING AND INSTALLATION OF THE SC-310/SC-740 SYSTEM

1. STORMTECH SC-310 & SC-740 CHAMBERS SHALL NOT BE INSTALLED UNTIL THE MANUFACTURER'S REPRESENTATIVE HAS COMPLETED A PRE-CONSTRUCTION MEETING WITH THE INSTALLERS.
2. STORMTECH SC-310 & SC-740 CHAMBERS SHALL BE INSTALLED IN ACCORDANCE WITH THE "STORMTECH SC-310/SC-740/SC-780 CONSTRUCTION GUIDE".
3. CHAMBERS ARE NOT TO BE BACKFILLED WITH A DOZER OR AN EXCAVATOR SITUATED OVER THE CHAMBERS.

   STORMTECH RECOMMENDS 3 BACKFILL METHODS:
   - STONESHOOTER LOCATED OFF THE CHAMBER BED.
   - BACKFILL AS ROWS ARE BUILT USING AN EXCAVATOR ON THE FOUNDATION STONE OR SUBGRADE.
   - BACKFILL FROM OUTSIDE THE EXCAVATION USING A LONG BOOM HOE OR EXCAVATOR.
4. THE FOUNDATION STONE SHALL BE LEVELED AND COMPACTED PRIOR TO PLACING CHAMBERS.
5. JOINTS BETWEEN CHAMBERS SHALL BE PROPERLY SEATED PRIOR TO PLACING STONE.
6. MAINTAIN MINIMUM - 6" (150 mm) SPACING BETWEEN THE CHAMBER ROWS.
7. EMBEDMENT STONE SURROUNDING CHAMBERS MUST BE A CLEAN, CRUSHED, ANGULAR STONE 3/4-2" (20-50 mm).
8. THE CONTRACTOR MUST REPORT ANY DISCREPANCIES WITH CHAMBER FOUNDATION MATERIALS BEARING CAPACITIES TO THE SITE DESIGN ENGINEER.
9. ADS RECOMMENDS THE USE OF "FLEXSTORM CATCH IT" INSERTS DURING CONSTRUCTION FOR ALL INLETS TO PROTECT THE SUBSURFACE STORMWATER MANAGEMENT SYSTEM FROM CONSTRUCTION SITE RUNOFF.

NOTES FOR CONSTRUCTION EQUIPMENT

1. STORMTECH SC-310 & SC-740 CHAMBERS SHALL BE INSTALLED IN ACCORDANCE WITH THE "STORMTECH SC-310/SC-740/DC-780 CONSTRUCTION GUIDE".
2. THE USE OF CONSTRUCTION EQUIPMENT OVER SC-310 & SC-740 CHAMBERS IS LIMITED:
   - NO EQUIPMENT IS ALLOWED ON BARE CHAMBERS.
   - NO RUBBER TIRED LOADERS, DUMP TRUCKS, OR EXCAVATORS ARE ALLOWED UNTIL PROPER FILL DEPTHS ARE REACHED IN ACCORDANCE WITH THE "STORMTECH SC-310/SC-740/DC-780 CONSTRUCTION GUIDE".
   - WEIGHT LIMITS FOR CONSTRUCTION EQUIPMENT CAN BE FOUND IN THE "STORMTECH SC-310/SC-740/DC-780 CONSTRUCTION GUIDE".
3. FULL 36" (900 mm) OF STABILIZED COVER MATERIALS OVER THE CHAMBERS IS REQUIRED FOR DUMP TRUCK TRAVEL OR DUMPING.

USE OF A DOZER TO PUSH EMBEDMENT STONE BETWEEN THE ROWS OF CHAMBERS MAY CAUSE DAMAGE TO THE CHAMBERS AND IS NOT AN ACCEPTABLE BACKFILL METHOD. ANY CHAMBERS DAMAGED BY THE "DUMP AND PUSH" METHOD ARE NOT COVERED UNDER THE STORMTECH STANDARD WARRANTY.

CONTACT STORMTECH AT 1-888-892-2694 WITH ANY QUESTIONS ON INSTALLATION REQUIREMENTS OR WEIGHT LIMITS FOR CONSTRUCTION EQUIPMENT.

©2015 ADS, INC.

CONCEPTUAL LAYOUT

(144) STORMTECH SC-740 CHAMBERS
(16) STORMTECH SC-740 END CAPS
INSTALLED WITH 6 " COVER STONE, 30 " BASE STONE, 40% STONE VOID
INSTALLED SYSTEM VOLUME: 15980 CF
AREA OF SYSTEM: 5459 **FT²**
PERIMETER OF SYSTEM: 359 **FT**

COMPUTER GENERATED CONCEPTUAL LAYOUT - NOT FOR CONSTRUCTION

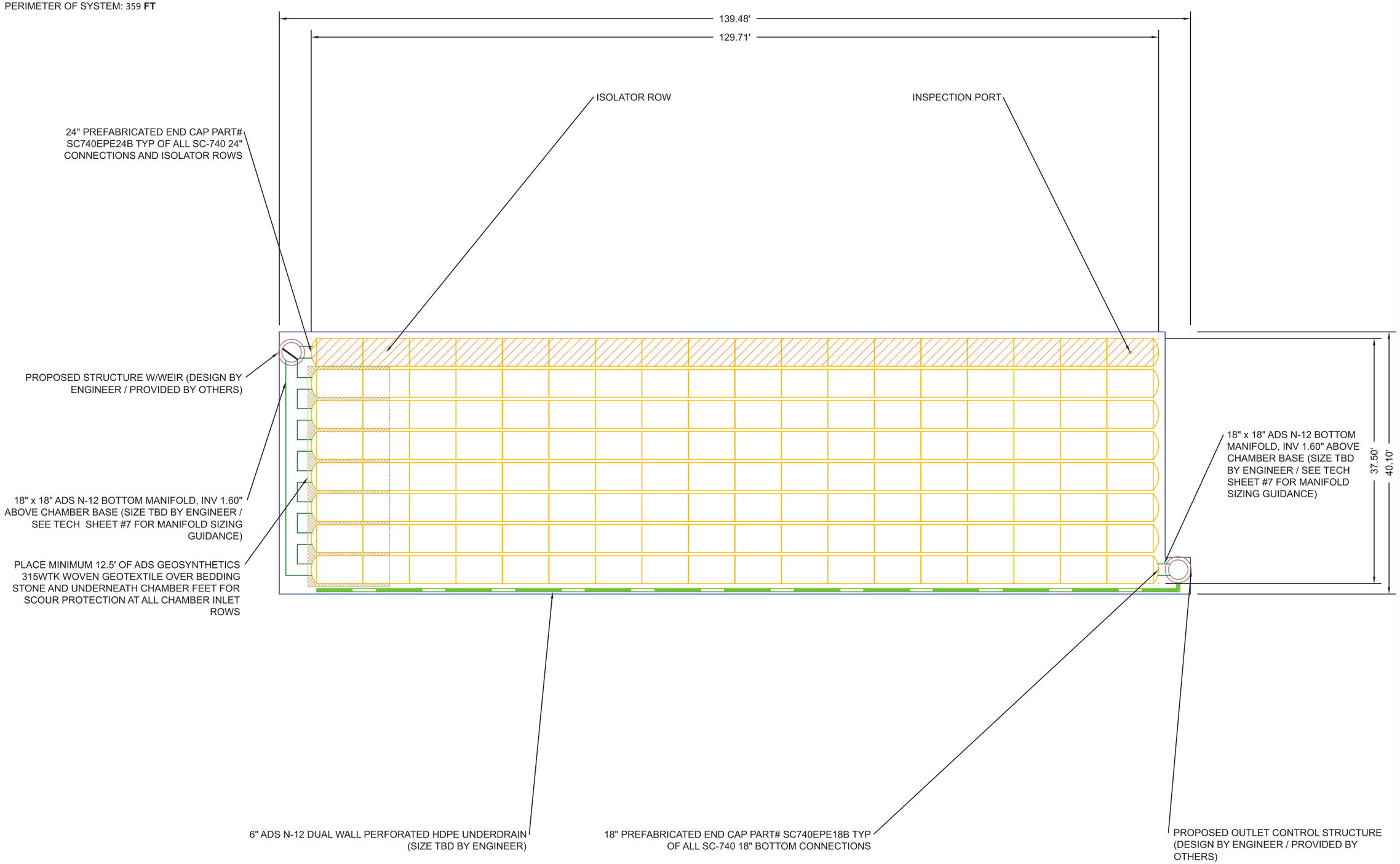

The Meadowlands (A-1)
Madison, WI

DATE: 01/29/2019 DRAWN: BA
PROJECT #: Tool CHECKED: ---

REV	DRW	CHK	DESCRIPTION

StormTech®
Detention- Retention- Water Quality
70 INWOOD ROAD, SUITE 3 | ROCKY HILL | CT | 06067
860-529-8188 |888-892-2694 | WWW.STORMTECH.COM

ADS.
ADVANCED DRAINAGE SYSTEMS, INC.
4640 TRUEMAN BLVD
HILLIARD, OH 43026
1-800-733-7473

NOT TO SCALE

THIS DRAWING HAS BEEN PREPARED BASED ON INFORMATION PROVIDED TO ADS UNDER THE DIRECTION OF THE SITE DESIGN ENGINEER OR OTHER PROJECT REPRESENTATIVE. THE SITE DESIGN ENGINEER SHALL REVIEW THIS DRAWING PRIOR TO CONSTRUCTION. IT IS THE ULTIMATE RESPONSIBILITY OF THE SITE DESIGN ENGINEER TO ENSURE THAT THE PRODUCT(S) DEPICTED AND ALL ASSOCIATED DETAILS MEET ALL APPLICABLE LAWS, REGULATIONS, AND PROJECT REQUIREMENTS.

ACCEPTABLE FILL MATERIALS: STORMTECH SC-740 CHAMBER SYSTEMS

MATERIAL LOCATION		DESCRIPTION	AASHTO MATERIAL CLASSIFICATIONS	COMPACTION / DENSITY REQUIREMENT
D	**FINAL FILL:** FILL MATERIAL FOR LAYER 'D' STARTS FROM THE TOP OF THE 'C' LAYER TO THE BOTTOM OF FLEXIBLE PAVEMENT OR UNPAVED FINISHED GRADE ABOVE. NOTE THAT PAVEMENT SUBBASE MAY BE PART OF THE 'D' LAYER	ANY SOIL/ROCK MATERIALS, NATIVE SOILS, OR PER ENGINEER'S PLANS. CHECK PLANS FOR PAVEMENT SUBGRADE REQUIREMENTS.	N/A	PREPARE PER SITE DESIGN ENGINEER'S PLANS. PAVED INSTALLATIONS MAY HAVE STRINGENT MATERIAL AND PREPARATION REQUIREMENTS.
C	**INITIAL FILL:** FILL MATERIAL FOR LAYER 'C' STARTS FROM THE TOP OF THE EMBEDMENT STONE ('B' LAYER) TO 18" (450 mm) ABOVE THE TOP OF THE CHAMBER. NOTE THAT PAVEMENT SUBBASE MAY BE A PART OF THE 'C' LAYER.	GRANULAR WELL-GRADED SOIL/AGGREGATE MIXTURES, <35% FINES OR PROCESSED AGGREGATE. MOST PAVEMENT SUBBASE MATERIALS CAN BE USED IN LIEU OF THIS LAYER.	AASHTO M145[1] A-1, A-2-4, A-3 OR AASHTO M43[1] 3, 357, 4, 467, 5, 56, 57, 6, 67, 68, 7, 78, 8, 89, 9, 10	BEGIN COMPACTIONS AFTER 12" (300 mm) OF MATERIAL OVER THE CHAMBERS IS REACHED. COMPACT ADDITIONAL LAYERS IN 6" (150 mm) MAX LIFTS TO A MIN. 95% PROCTOR DENSITY FOR WELL GRADED MATERIAL AND 95% RELATIVE DENSITY FOR PROCESSED AGGREGATE MATERIALS. ROLLER GROSS VEHICLE WEIGHT NOT TO EXCEED 12,000 lbs (53 kN). DYNAMIC FORCE NOT TO EXCEED 20,000 lbs (89 kN).
B	**EMBEDMENT STONE:** FILL SURROUNDING THE CHAMBERS FROM THE FOUNDATION STONE ('A' LAYER) TO THE 'C' LAYER ABOVE.	CLEAN, CRUSHED, ANGULAR STONE, NOMINAL SIZE DISTRIBUTION BETWEEN 3/4-2 INCH (20-50 mm)	AASHTO M43[1] 3, 357, 4, 467, 5, 56, 57	NO COMPACTION REQUIRED.
A	**FOUNDATION STONE:** FILL BELOW CHAMBERS FROM THE SUBGRADE UP TO THE FOOT (BOTTOM) OF THE CHAMBER.	CLEAN, CRUSHED, ANGULAR STONE, NOMINAL SIZE DISTRIBUTION BETWEEN 3/4-2 INCH (20-50 mm)	AASHTO M43[1] 3, 357, 4, 467, 5, 56, 57	PLATE COMPACT OR ROLL TO ACHIEVE A FLAT SURFACE. [2] [3]

PLEASE NOTE:

1. THE LISTED AASHTO DESIGNATIONS ARE FOR GRADATIONS ONLY. THE STONE MUST ALSO BE CLEAN, CRUSHED, ANGULAR. FOR EXAMPLE, A SPECIFICATION FOR #4 STONE WOULD STATE: "CLEAN, CRUSHED, ANGULAR NO. 4 (AASHTO M43) STONE".
2. STORMTECH COMPACTION REQUIREMENTS ARE MET FOR 'A' LOCATION MATERIALS WHEN PLACED AND COMPACTED IN 6" (150 mm) (MAX) LIFTS USING TWO FULL COVERAGES WITH A VIBRATORY COMPACTOR.
3. WHERE INFILTRATION SURFACES MAY BE COMPROMISED BY COMPACTION, FOR STANDARD DESIGN LOAD CONDITIONS, A FLAT SURFACE MAY BE ACHIEVED BY RAKING OR DRAGGING WITHOUT COMPACTION EQUIPMENT. FOR SPECIAL LOAD DESIGNS, CONTACT STORMTECH FOR COMPACTION REQUIREMENTS.

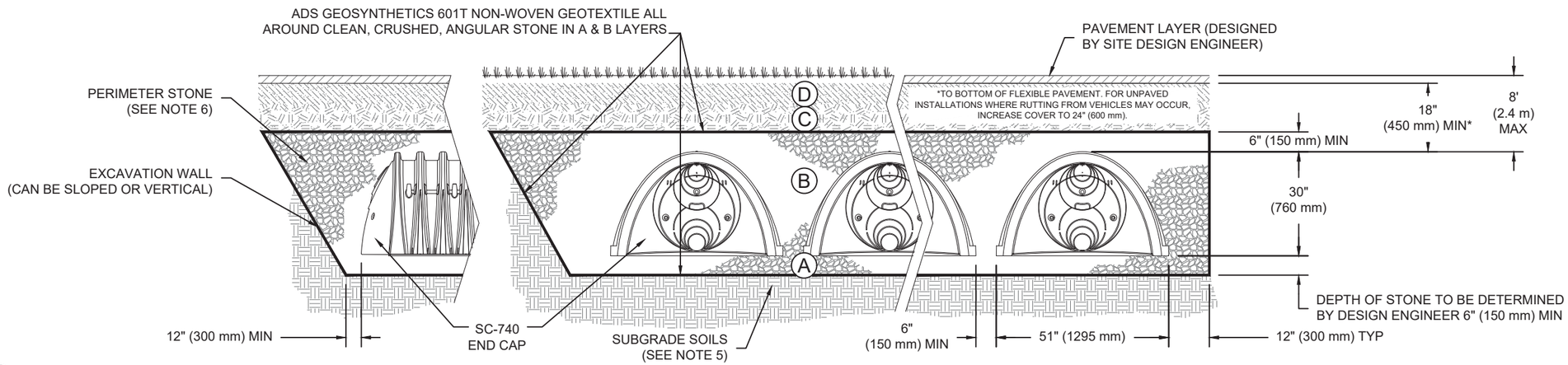

NOTES:

1. SC-740 CHAMBERS SHALL CONFORM TO THE REQUIREMENTS OF ASTM F2418 "STANDARD SPECIFICATION FOR POLYPROPYLENE (PP) CORRUGATED WALL STORMWATER COLLECTION CHAMBERS", OR ASTM F2922 "STANDARD SPECIFICATION FOR POLYETHYLENE (PE) CORRUGATED WALL STORMWATER COLLECTION CHAMBERS".
2. SC-740 CHAMBERS SHALL BE DESIGNED IN ACCORDANCE WITH ASTM F2787 "STANDARD PRACTICE FOR STRUCTURAL DESIGN OF THERMOPLASTIC CORRUGATED WALL STORMWATER COLLECTION CHAMBERS".
3. "ACCEPTABLE FILL MATERIALS" TABLE ABOVE PROVIDES MATERIAL LOCATIONS, DESCRIPTIONS, GRADATIONS, AND COMPACTION REQUIREMENTS FOR FOUNDATION, EMBEDMENT, AND FILL MATERIALS.
4. THE "SITE DESIGN ENGINEER" REFERS TO THE ENGINEER RESPONSIBLE FOR THE DESIGN AND LAYOUT OF THE STORMTECH CHAMBERS FOR THIS PROJECT.
5. THE SITE DESIGN ENGINEER IS RESPONSIBLE FOR ASSESSING THE BEARING RESISTANCE (ALLOWABLE BEARING CAPACITY) OF THE SUBGRADE SOILS AND THE DEPTH OF FOUNDATION STONE WITH CONSIDERATION FOR THE RANGE OF EXPECTED SOIL MOISTURE CONDITIONS.
6. PERIMETER STONE MUST BE EXTENDED HORIZONTALLY TO THE EXCAVATION WALL FOR BOTH VERTICAL AND SLOPED EXCAVATION WALLS.
7. ONCE LAYER 'C' IS PLACED, ANY SOIL/MATERIAL CAN BE PLACED IN LAYER 'D' UP TO THE FINISHED GRADE. MOST PAVEMENT SUBBASE SOILS CAN BE USED TO REPLACE THE MATERIAL REQUIREMENTS OF LAYER 'C' OR 'D' AT THE SITE DESIGN ENGINEER'S DISCRETION.

The Meadowlands (A-1)
Madison, WI

DATE: 01/29/2019 | DRAWN: BA
PROJECT #: Tool | CHECKED: ---

REV	DRW	CHK	DESCRIPTION

StormTech® Detention•Retention•Water Quality
70 INWOOD ROAD, SUITE 3 | ROCKY HILL | CT | 06067
860-529-8188 | 888-892-2694 | WWW.STORMTECH.COM

ADS® ADVANCED DRAINAGE SYSTEMS, INC.
4640 TRUEMAN BLVD
HILLIARD, OH 43026
1-800-733-7473

THIS DRAWING HAS BEEN PREPARED BASED ON INFORMATION PROVIDED TO ADS UNDER THE DIRECTION OF THE SITE DESIGN ENGINEER OR OTHER PROJECT REPRESENTATIVE. THE SITE DESIGN ENGINEER SHALL REVIEW THIS DRAWING PRIOR TO CONSTRUCTION. IT IS THE ULTIMATE RESPONSIBILITY OF THE SITE DESIGN ENGINEER TO ENSURE THAT THE PRODUCT(S) DEPICTED AND ALL ASSOCIATED DETAILS MEET ALL APPLICABLE LAWS, REGULATIONS, AND PROJECT REQUIREMENTS.

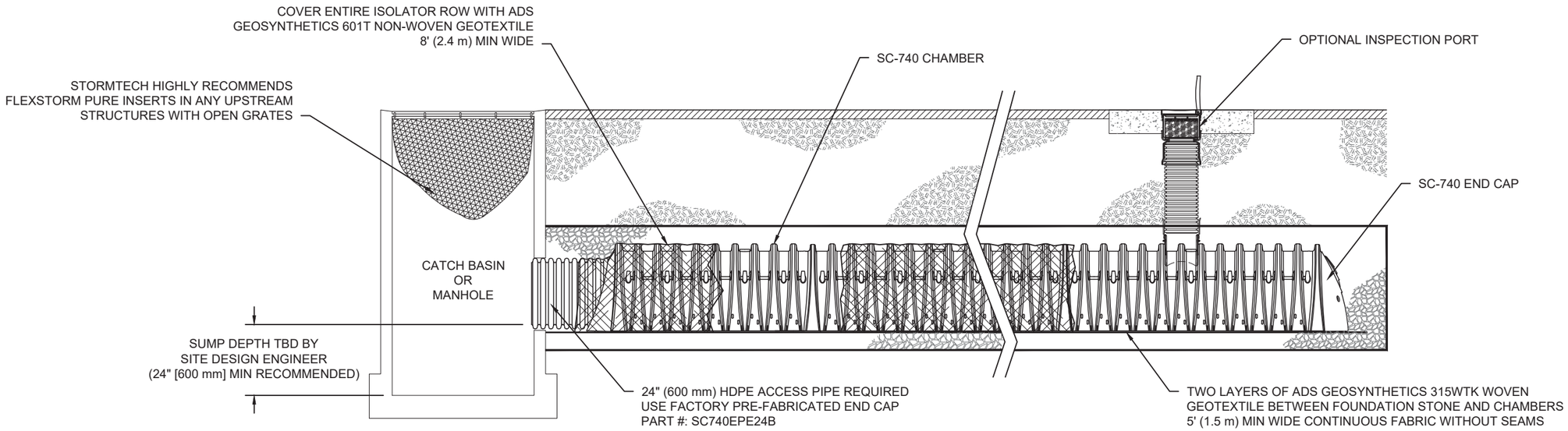

SC-740 ISOLATOR ROW DETAIL

NTS

INSPECTION & MAINTENANCE

STEP 1) INSPECT ISOLATOR ROW FOR SEDIMENT
- A. INSPECTION PORTS (IF PRESENT)
  - A.1. REMOVE/OPEN LID ON NYLOPLAST INLINE DRAIN
  - A.2. REMOVE AND CLEAN FLEXSTORM FILTER IF INSTALLED
  - A.3. USING A FLASHLIGHT AND STADIA ROD, MEASURE DEPTH OF SEDIMENT AND RECORD ON MAINTENANCE LOG
  - A.4. LOWER A CAMERA INTO ISOLATOR ROW FOR VISUAL INSPECTION OF SEDIMENT LEVELS (OPTIONAL)
  - A.5. IF SEDIMENT IS AT, OR ABOVE, 3" (80 mm) PROCEED TO STEP 2. IF NOT, PROCEED TO STEP 3.
- B. ALL ISOLATOR ROWS
  - B.1. REMOVE COVER FROM STRUCTURE AT UPSTREAM END OF ISOLATOR ROW
  - B.2. USING A FLASHLIGHT, INSPECT DOWN THE ISOLATOR ROW THROUGH OUTLET PIPE
    - i) MIRRORS ON POLES OR CAMERAS MAY BE USED TO AVOID A CONFINED SPACE ENTRY
    - ii) FOLLOW OSHA REGULATIONS FOR CONFINED SPACE ENTRY IF ENTERING MANHOLE
  - B.3. IF SEDIMENT IS AT, OR ABOVE, 3" (80 mm) PROCEED TO STEP 2. IF NOT, PROCEED TO STEP 3.

STEP 2) CLEAN OUT ISOLATOR ROW USING THE JETVAC PROCESS
- A. A FIXED CULVERT CLEANING NOZZLE WITH REAR FACING SPREAD OF 45" (1.1 m) OR MORE IS PREFERRED
- B. APPLY MULTIPLE PASSES OF JETVAC UNTIL BACKFLUSH WATER IS CLEAN
- C. VACUUM STRUCTURE SUMP AS REQUIRED

STEP 3) REPLACE ALL COVERS, GRATES, FILTERS, AND LIDS; RECORD OBSERVATIONS AND ACTIONS.

STEP 4) INSPECT AND CLEAN BASINS AND MANHOLES UPSTREAM OF THE STORMTECH SYSTEM.

NOTES

1. INSPECT EVERY 6 MONTHS DURING THE FIRST YEAR OF OPERATION. ADJUST THE INSPECTION INTERVAL BASED ON PREVIOUS OBSERVATIONS OF SEDIMENT ACCUMULATION AND HIGH WATER ELEVATIONS.
2. CONDUCT JETTING AND VACTORING ANNUALLY OR WHEN INSPECTION SHOWS THAT MAINTENANCE IS NECESSARY.

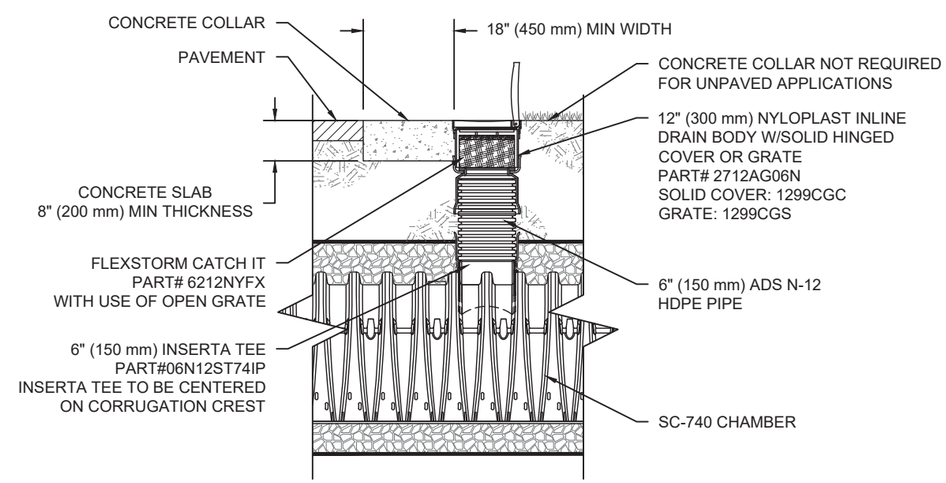

SC-740 6" INSPECTION PORT DETAIL

NTS

The Meadowlands (A-1)
Madison, WI

DATE: 01/29/2019 DRAWN: BA
PROJECT #: Tool CHECKED: ---

REV	DRW	CHK	DESCRIPTION

StormTech® Detention•Retention•Water Quality
70 INWOOD ROAD, SUITE 3 | ROCKY HILL | CT | 06067
860-529-8188 | 888-892-2694 | WWW.STORMTECH.COM

ADS® ADVANCED DRAINAGE SYSTEMS, INC.
4640 TRUEMAN BLVD
HILLIARD, OH 43026
1-800-733-7473

THIS DRAWING HAS BEEN PREPARED BASED ON INFORMATION PROVIDED TO ADS UNDER THE DIRECTION OF THE SITE DESIGN ENGINEER OR OTHER PROJECT REPRESENTATIVE. THE SITE DESIGN ENGINEER SHALL REVIEW THIS DRAWING PRIOR TO CONSTRUCTION. IT IS THE ULTIMATE RESPONSIBILITY OF THE SITE DESIGN ENGINEER TO ENSURE THAT THE PRODUCT(S) DEPICTED AND ALL ASSOCIATED DETAILS MEET ALL APPLICABLE LAWS, REGULATIONS, AND PROJECT REQUIREMENTS.

UNDERDRAIN DETAIL

NTS

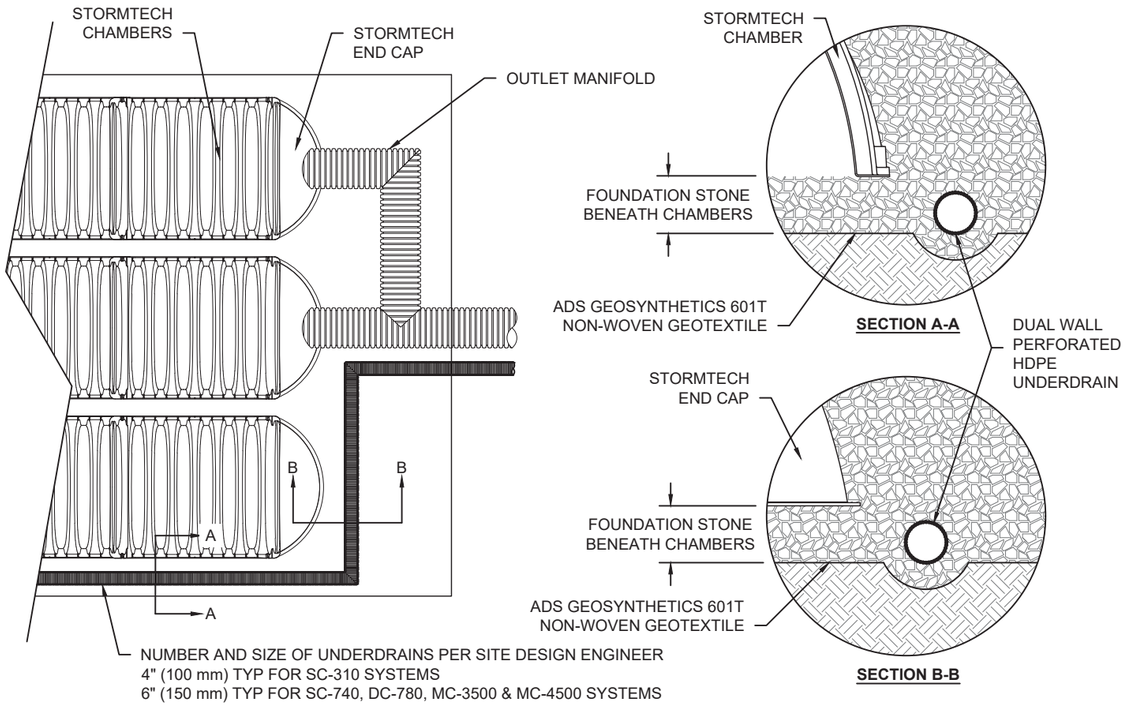

SC-740 TECHNICAL SPECIFICATION

NTS

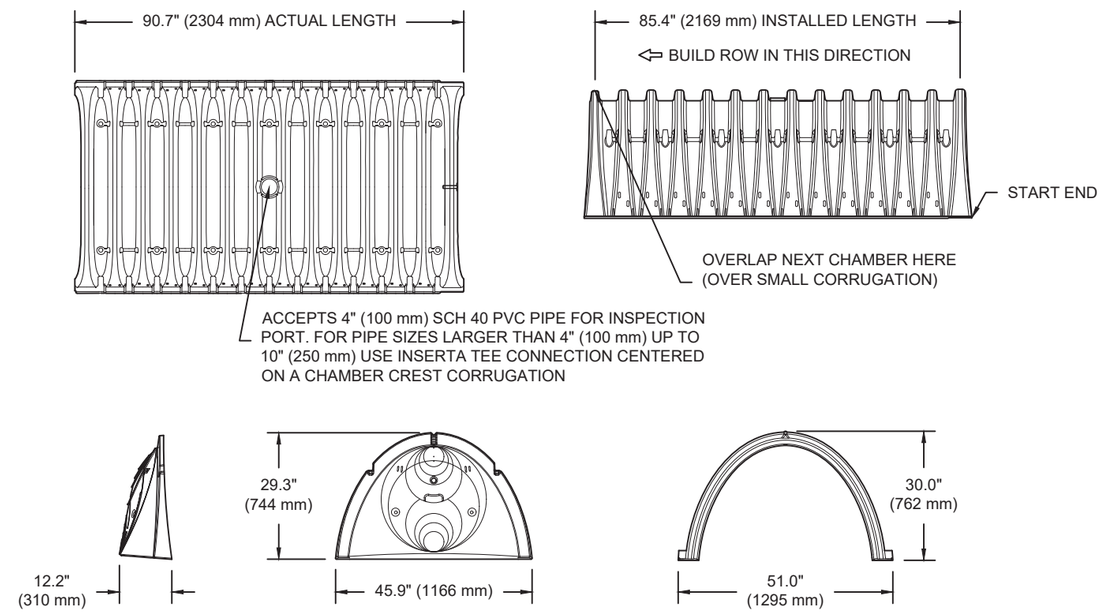

NOMINAL CHAMBER SPECIFICATIONS

SIZE (W X H X INSTALLED LENGTH)	51.0" X 30.0" X 85.4"	(1295 mm X 762 mm X 2169 mm)
CHAMBER STORAGE	45.9 CUBIC FEET	(1.30 m³)
MINIMUM INSTALLED STORAGE*	74.9 CUBIC FEET	(2.12 m³)
WEIGHT	75.0 lbs.	(33.6 kg)

*ASSUMES 6" (152 mm) STONE ABOVE, BELOW, AND BETWEEN CHAMBERS

INSERTA TEE DETAIL

NTS

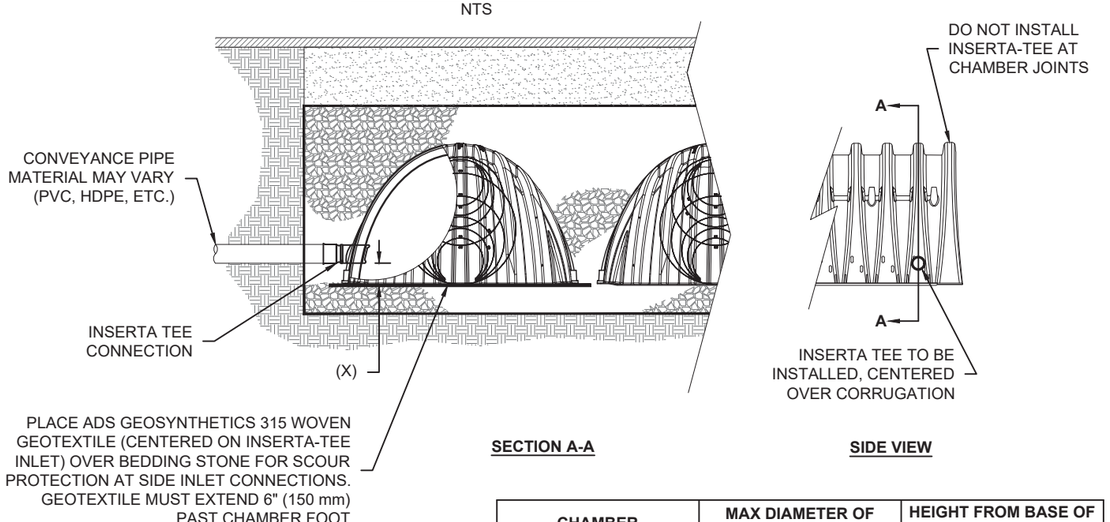

CHAMBER	MAX DIAMETER OF INSERTA TEE	HEIGHT FROM BASE OF CHAMBER (X)
SC-310	6" (150 mm)	4" (100 mm)
SC-740	10" (250 mm)	4" (100 mm)
DC-780	10" (250 mm)	4" (100 mm)
MC-3500	12" (300 mm)	6" (150 mm)
MC-4500	12" (300 mm)	8" (200 mm)
INSERTA TEE FITTINGS AVAILABLE FOR SDR 26, SDR 35, SCH 40 IPS GASKETED & SOLVENT WELD, N-12, HP STORM, C-900 OR DUCTILE IRON		

NOTE:
PART NUMBERS WILL VARY BASED ON INLET PIPE MATERIALS.
CONTACT STORMTECH FOR MORE INFORMATION.

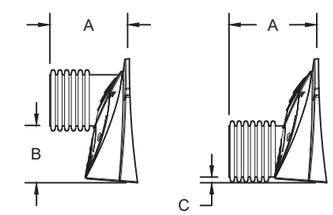

STUBS AT BOTTOM OF END CAP FOR PART NUMBERS ENDING WITH "B"
STUBS AT TOP OF END CAP FOR PART NUMBERS ENDING WITH "T"

PART #	STUB	A	B	C
SC740EPE06T / SC740EPE06TPC	6" (150 mm)	10.9" (277 mm)	18.5" (470 mm)	---
SC740EPE06B / SC740EPE06BPC			---	0.5" (13 mm)
SC740EPE08T /SC740EPE08TPC	8" (200 mm)	12.2" (310 mm)	16.5" (419 mm)	---
SC740EPE08B / SC740EPE08BPC			---	0.6" (15 mm)
SC740EPE10T / SC740EPE10TPC	10" (250 mm)	13.4" (340 mm)	14.5" (368 mm)	---
SC740EPE10B / SC740EPE10BPC			---	0.7" (18 mm)
SC740EPE12T / SC740EPE12TPC	12" (300 mm)	14.7" (373 mm)	12.5" (318 mm)	---
SC740EPE12B / SC740EPE12BPC			---	1.2" (30 mm)
SC740EPE15T / SC740EPE15TPC	15" (375 mm)	18.4" (467 mm)	9.0" (229 mm)	---
SC740EPE15B / SC740EPE15BPC			---	1.3" (33 mm)
SC740EPE18T / SC740EPE18TPC	18" (450 mm)	19.7" (500 mm)	5.0" (127 mm)	---
SC740EPE18B / SC740EPE18BPC			---	1.6" (41 mm)
SC740EPE24B*	24" (600 mm)	18.5" (470 mm)	---	0.1" (3 mm)

ALL STUBS, EXCEPT FOR THE SC740EPE24B ARE PLACED AT BOTTOM OF END CAP SUCH THAT THE OUTSIDE DIAMETER OF THE STUB IS FLUSH WITH THE BOTTOM OF THE END CAP. FOR ADDITIONAL INFORMATION CONTACT STORMTECH AT 1-888-892-2694.

* FOR THE SC740EPE24B THE 24" (600 mm) STUB LIES BELOW THE BOTTOM OF THE END CAP APPROXIMATELY 1.75" (44 mm). BACKFILL MATERIAL SHOULD BE REMOVED FROM BELOW THE N-12 STUB SO THAT THE FITTING SITS LEVEL.

NOTE: ALL DIMENSIONS ARE NOMINAL

The Meadowlands (A-1)
Madison, WI

DATE: 01/29/2019 | DRAWN: BA
PROJECT #: Tool | CHECKED: ---

REV	DRW	CHK	DESCRIPTION

StormTech®
Detention•Retention•Water Quality
70 INWOOD ROAD, SUITE 3 | ROCKY HILL | CT | 06067
860-529-8188 | 888-892-2694 | WWW.STORMTECH.COM

ADS®
ADVANCED DRAINAGE SYSTEMS, INC.
4640 TRUEMAN BLVD
HILLIARD, OH 43026
1-800-733-7473

THIS DRAWING HAS BEEN PREPARED BASED ON INFORMATION PROVIDED TO ADS UNDER THE DIRECTION OF THE SITE DESIGN ENGINEER OR OTHER PROJECT REPRESENTATIVE. THE SITE DESIGN ENGINEER SHALL REVIEW THIS DRAWING PRIOR TO CONSTRUCTION. IT IS THE ULTIMATE RESPONSIBILITY OF THE SITE DESIGN ENGINEER TO ENSURE THAT THE PRODUCT(S) DEPICTED AND ALL ASSOCIATED DETAILS MEET ALL APPLICABLE LAWS, REGULATIONS, AND PROJECT REQUIREMENTS.

ADVANCED DRAINAGE SYSTEMS, INC.

SiteASSIST™ by StormTech

FOR STORMTECH INSTRUCTIONS, DOWNLOAD THE INSTALLATION APP

The Meadowlands (A-2)

Madison, WI

STORMTECH CHAMBER SPECIFICATIONS

1. CHAMBERS SHALL BE STORMTECH SC-740, SC-310, OR APPROVED EQUAL.
2. CHAMBERS SHALL BE MANUFACTURED FROM VIRGIN POLYPROPYLENE OR POLYETHYLENE RESINS.
3. CHAMBER ROWS SHALL PROVIDE CONTINUOUS, UNOBSTRUCTED INTERNAL SPACE WITH NO INTERNAL SUPPORT PANELS THAT WOULD IMPEDE FLOW OR LIMIT ACCESS FOR INSPECTION.
4. THE STRUCTURAL DESIGN OF THE CHAMBERS, THE STRUCTURAL BACKFILL, AND THE INSTALLATION REQUIREMENTS SHALL ENSURE THAT THE LOAD FACTORS SPECIFIED IN THE AASHTO LRFD BRIDGE DESIGN SPECIFICATIONS, SECTION 12.12, ARE MET FOR: 1) LONG-DURATION DEAD LOADS AND 2) SHORT-DURATION LIVE LOADS, BASED ON THE AASHTO DESIGN TRUCK WITH CONSIDERATION FOR IMPACT AND MULTIPLE VEHICLE PRESENCES.
5. CHAMBERS SHALL MEET ASTM F2922 (POLYETHYLENE) OR ASTM F2418 (POLYPROPYLENE), "STANDARD SPECIFICATION FOR THERMOPLASTIC CORRUGATED WALL STORMWATER COLLECTION CHAMBERS".
6. CHAMBERS SHALL BE DESIGNED AND ALLOWABLE LOADS DETERMINED IN ACCORDANCE WITH ASTM F2787, "STANDARD PRACTICE FOR STRUCTURAL DESIGN OF THERMOPLASTIC CORRUGATED WALL STORMWATER COLLECTION CHAMBERS".
7. ONLY CHAMBERS THAT ARE APPROVED BY THE SITE DESIGN ENGINEER WILL BE ALLOWED. THE CHAMBER MANUFACTURER SHALL SUBMIT THE FOLLOWING UPON REQUEST TO THE SITE DESIGN ENGINEER FOR APPROVAL BEFORE DELIVERING CHAMBERS TO THE PROJECT SITE:
   a. A STRUCTURAL EVALUATION SEALED BY A REGISTERED PROFESSIONAL ENGINEER THAT DEMONSTRATES THAT THE SAFETY FACTORS ARE GREATER THAN OR EQUAL TO 1.95 FOR DEAD LOAD AND 1.75 FOR LIVE LOAD, THE MINIMUM REQUIRED BY ASTM F2787 AND BY AASHTO FOR THERMOPLASTIC PIPE.
   b. A STRUCTURAL EVALUATION SEALED BY A REGISTERED PROFESSIONAL ENGINEER THAT DEMONSTRATES THAT THE LOAD FACTORS SPECIFIED IN THE AASHTO LRFD BRIDGE DESIGN SPECIFICATIONS, SECTION 12.12, ARE MET. THE 50 YEAR CREEP MODULUS DATA SPECIFIED IN ASTM F2418 OR ASTM F2922 MUST BE USED AS PART OF THE AASHTO STRUCTURAL EVALUATION TO VERIFY LONG-TERM PERFORMANCE.
   c. STRUCTURAL CROSS SECTION DETAIL ON WHICH THE STRUCTURAL EVALUATION IS BASED.
8. CHAMBERS AND END CAPS SHALL BE PRODUCED AT AN ISO 9001 CERTIFIED MANUFACTURING FACILITY.

IMPORTANT - NOTES FOR THE BIDDING AND INSTALLATION OF THE SC-310/SC-740 SYSTEM

1. STORMTECH SC-310 & SC-740 CHAMBERS SHALL NOT BE INSTALLED UNTIL THE MANUFACTURER'S REPRESENTATIVE HAS COMPLETED A PRE-CONSTRUCTION MEETING WITH THE INSTALLERS.
2. STORMTECH SC-310 & SC-740 CHAMBERS SHALL BE INSTALLED IN ACCORDANCE WITH THE "STORMTECH SC-310/SC-740/SC-780 CONSTRUCTION GUIDE".
3. CHAMBERS ARE NOT TO BE BACKFILLED WITH A DOZER OR AN EXCAVATOR SITUATED OVER THE CHAMBERS.

   STORMTECH RECOMMENDS 3 BACKFILL METHODS:
   - STONESHOOTER LOCATED OFF THE CHAMBER BED.
   - BACKFILL AS ROWS ARE BUILT USING AN EXCAVATOR ON THE FOUNDATION STONE OR SUBGRADE.
   - BACKFILL FROM OUTSIDE THE EXCAVATION USING A LONG BOOM HOE OR EXCAVATOR.
4. THE FOUNDATION STONE SHALL BE LEVELED AND COMPACTED PRIOR TO PLACING CHAMBERS.
5. JOINTS BETWEEN CHAMBERS SHALL BE PROPERLY SEATED PRIOR TO PLACING STONE.
6. MAINTAIN MINIMUM - 6" (150 mm) SPACING BETWEEN THE CHAMBER ROWS.
7. EMBEDMENT STONE SURROUNDING CHAMBERS MUST BE A CLEAN, CRUSHED, ANGULAR STONE 3/4-2" (20-50 mm).
8. THE CONTRACTOR MUST REPORT ANY DISCREPANCIES WITH CHAMBER FOUNDATION MATERIALS BEARING CAPACITIES TO THE SITE DESIGN ENGINEER.
9. ADS RECOMMENDS THE USE OF "FLEXSTORM CATCH IT" INSERTS DURING CONSTRUCTION FOR ALL INLETS TO PROTECT THE SUBSURFACE STORMWATER MANAGEMENT SYSTEM FROM CONSTRUCTION SITE RUNOFF.

NOTES FOR CONSTRUCTION EQUIPMENT

1. STORMTECH SC-310 & SC-740 CHAMBERS SHALL BE INSTALLED IN ACCORDANCE WITH THE "STORMTECH SC-310/SC-740/DC-780 CONSTRUCTION GUIDE".
2. THE USE OF CONSTRUCTION EQUIPMENT OVER SC-310 & SC-740 CHAMBERS IS LIMITED:
   - NO EQUIPMENT IS ALLOWED ON BARE CHAMBERS.
   - NO RUBBER TIRED LOADERS, DUMP TRUCKS, OR EXCAVATORS ARE ALLOWED UNTIL PROPER FILL DEPTHS ARE REACHED IN ACCORDANCE WITH THE "STORMTECH SC-310/SC-740/DC-780 CONSTRUCTION GUIDE".
   - WEIGHT LIMITS FOR CONSTRUCTION EQUIPMENT CAN BE FOUND IN THE "STORMTECH SC-310/SC-740/DC-780 CONSTRUCTION GUIDE".
3. FULL 36" (900 mm) OF STABILIZED COVER MATERIALS OVER THE CHAMBERS IS REQUIRED FOR DUMP TRUCK TRAVEL OR DUMPING.

USE OF A DOZER TO PUSH EMBEDMENT STONE BETWEEN THE ROWS OF CHAMBERS MAY CAUSE DAMAGE TO THE CHAMBERS AND IS NOT AN ACCEPTABLE BACKFILL METHOD. ANY CHAMBERS DAMAGED BY THE "DUMP AND PUSH" METHOD ARE NOT COVERED UNDER THE STORMTECH STANDARD WARRANTY.

CONTACT STORMTECH AT 1-888-892-2694 WITH ANY QUESTIONS ON INSTALLATION REQUIREMENTS OR WEIGHT LIMITS FOR CONSTRUCTION EQUIPMENT.

©2015 ADS, INC.

CONCEPTUAL LAYOUT

(110) STORMTECH SC-310 CHAMBERS
(22) STORMTECH SC-310 END CAPS
INSTALLED WITH 6 " COVER STONE, 30 " BASE STONE, 40% STONE VOID
INSTALLED SYSTEM VOLUME: 6242 CF
AREA OF SYSTEM: 3039 **FT²**
PERIMETER OF SYSTEM: 241 **FT**

COMPUTER GENERATED CONCEPTUAL LAYOUT - NOT FOR CONSTRUCTION

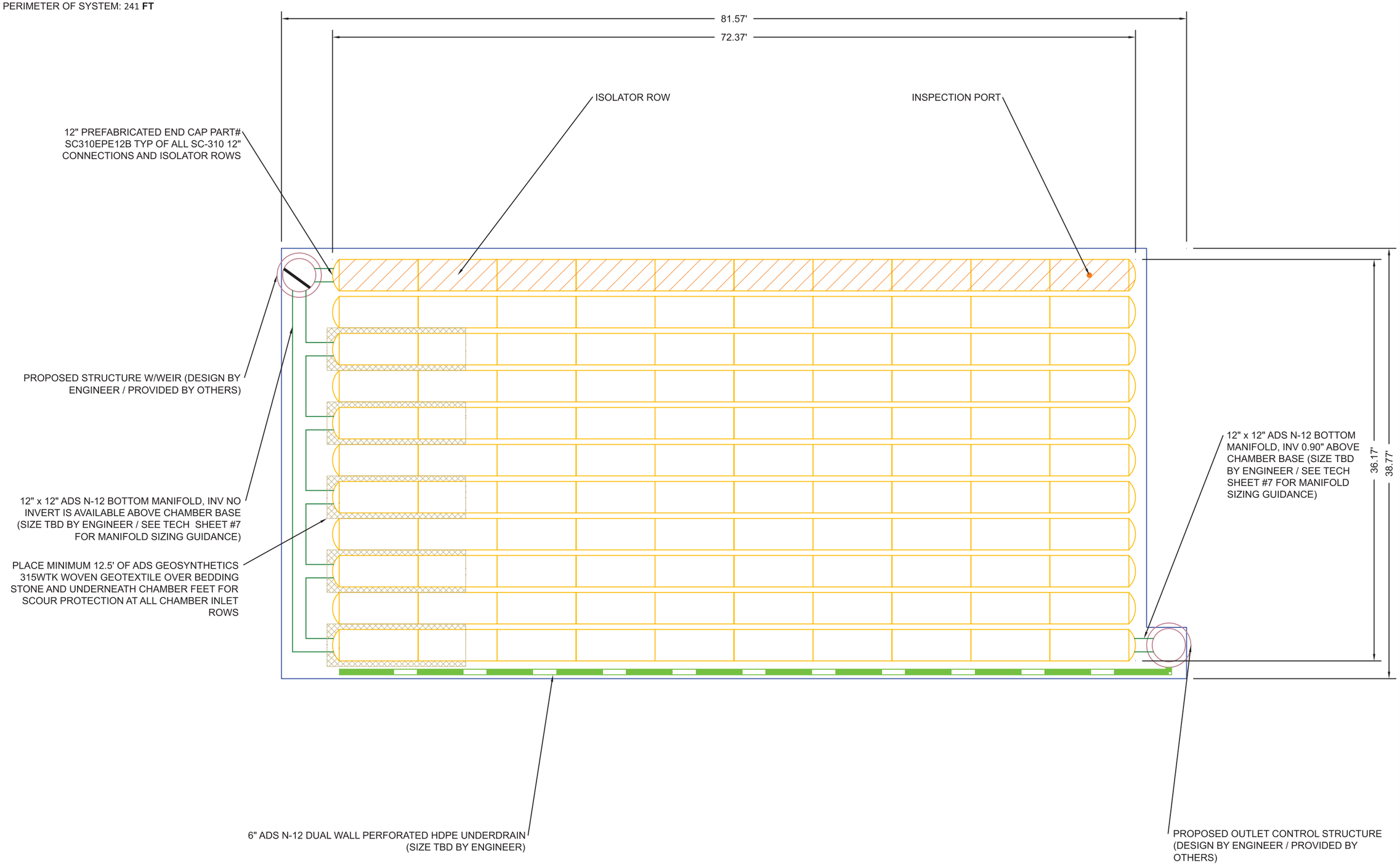

The Meadowlands (A-2)
Madison, WI

DATE: 01/29/2019 | DRAWN: BA
PROJECT #: Tool | CHECKED: ---

REV	DRW	CHK	DESCRIPTION

StormTech®
Detention · Retention · Water Quality
70 INWOOD ROAD, SUITE 3 | ROCKY HILL | CT | 06067
860-529-8188 | 888-892-2694 | WWW.STORMTECH.COM

ADS
ADVANCED DRAINAGE SYSTEMS, INC.
4640 TRUEMAN BLVD
HILLIARD, OH 43026
1-800-733-7473

NOT TO SCALE

THIS DRAWING HAS BEEN PREPARED BASED ON INFORMATION PROVIDED TO ADS UNDER THE DIRECTION OF THE SITE DESIGN ENGINEER OR OTHER PROJECT REPRESENTATIVE. THE SITE DESIGN ENGINEER SHALL REVIEW THIS DRAWING PRIOR TO CONSTRUCTION. IT IS THE ULTIMATE RESPONSIBILITY OF THE SITE DESIGN ENGINEER TO ENSURE THAT THE PRODUCT(S) DEPICTED AND ALL ASSOCIATED DETAILS MEET ALL APPLICABLE LAWS, REGULATIONS, AND PROJECT REQUIREMENTS.

ACCEPTABLE FILL MATERIALS: STORMTECH SC-310 CHAMBER SYSTEMS

MATERIAL LOCATION		DESCRIPTION	AASHTO MATERIAL CLASSIFICATIONS	COMPACTION / DENSITY REQUIREMENT
D	**FINAL FILL:** FILL MATERIAL FOR LAYER 'D' STARTS FROM THE TOP OF THE 'C' LAYER TO THE BOTTOM OF FLEXIBLE PAVEMENT OR UNPAVED FINISHED GRADE ABOVE. NOTE THAT PAVEMENT SUBBASE MAY BE PART OF THE 'D' LAYER	ANY SOIL/ROCK MATERIALS, NATIVE SOILS, OR PER ENGINEER'S PLANS. CHECK PLANS FOR PAVEMENT SUBGRADE REQUIREMENTS.	N/A	PREPARE PER SITE DESIGN ENGINEER'S PLANS. PAVED INSTALLATIONS MAY HAVE STRINGENT MATERIAL AND PREPARATION REQUIREMENTS.
C	**INITIAL FILL:** FILL MATERIAL FOR LAYER 'C' STARTS FROM THE TOP OF THE EMBEDMENT STONE ('B' LAYER) TO 18" (450 mm) ABOVE THE TOP OF THE CHAMBER. NOTE THAT PAVEMENT SUBBASE MAY BE A PART OF THE 'C' LAYER.	GRANULAR WELL-GRADED SOIL/AGGREGATE MIXTURES, <35% FINES OR PROCESSED AGGREGATE. MOST PAVEMENT SUBBASE MATERIALS CAN BE USED IN LIEU OF THIS LAYER.	AASHTO M145[1] A-1, A-2-4, A-3 OR AASHTO M43[1] 3, 357, 4, 467, 5, 56, 57, 6, 67, 68, 7, 78, 8, 89, 9, 10	BEGIN COMPACTIONS AFTER 12" (300 mm) OF MATERIAL OVER THE CHAMBERS IS REACHED. COMPACT ADDITIONAL LAYERS IN 6" (150 mm) MAX LIFTS TO A MIN. 95% PROCTOR DENSITY FOR WELL GRADED MATERIAL AND 95% RELATIVE DENSITY FOR PROCESSED AGGREGATE MATERIALS. ROLLER GROSS VEHICLE WEIGHT NOT TO EXCEED 12,000 lbs (53 kN). DYNAMIC FORCE NOT TO EXCEED 20,000 lbs (89 kN).
B	**EMBEDMENT STONE:** FILL SURROUNDING THE CHAMBERS FROM THE FOUNDATION STONE ('A' LAYER) TO THE 'C' LAYER ABOVE.	CLEAN, CRUSHED, ANGULAR STONE, NOMINAL SIZE DISTRIBUTION BETWEEN 3/4-2 INCH (20-50 mm)	AASHTO M43[1] 3, 357, 4, 467, 5, 56, 57	NO COMPACTION REQUIRED.
A	**FOUNDATION STONE:** FILL BELOW CHAMBERS FROM THE SUBGRADE UP TO THE FOOT (BOTTOM) OF THE CHAMBER.	CLEAN, CRUSHED, ANGULAR STONE, NOMINAL SIZE DISTRIBUTION BETWEEN 3/4-2 INCH (20-50 mm)	AASHTO M43[1] 3, 357, 4, 467, 5, 56, 57	PLATE COMPACT OR ROLL TO ACHIEVE A FLAT SURFACE. [2 3]

PLEASE NOTE:
1. THE LISTED AASHTO DESIGNATIONS ARE FOR GRADATIONS ONLY. THE STONE MUST ALSO BE CLEAN, CRUSHED, ANGULAR. FOR EXAMPLE, A SPECIFICATION FOR #4 STONE WOULD STATE: "CLEAN, CRUSHED, ANGULAR NO. 4 (AASHTO M43) STONE".
2. STORMTECH COMPACTION REQUIREMENTS ARE MET FOR 'A' LOCATION MATERIALS WHEN PLACED AND COMPACTED IN 6" (150 mm) (MAX) LIFTS USING TWO FULL COVERAGES WITH A VIBRATORY COMPACTOR.
3. WHERE INFILTRATION SURFACES MAY BE COMPROMISED BY COMPACTION, FOR STANDARD DESIGN LOAD CONDITIONS, A FLAT SURFACE MAY BE ACHIEVED BY RAKING OR DRAGGING WITHOUT COMPACTION EQUIPMENT. FOR SPECIAL LOAD DESIGNS, CONTACT STORMTECH FOR COMPACTION REQUIREMENTS.

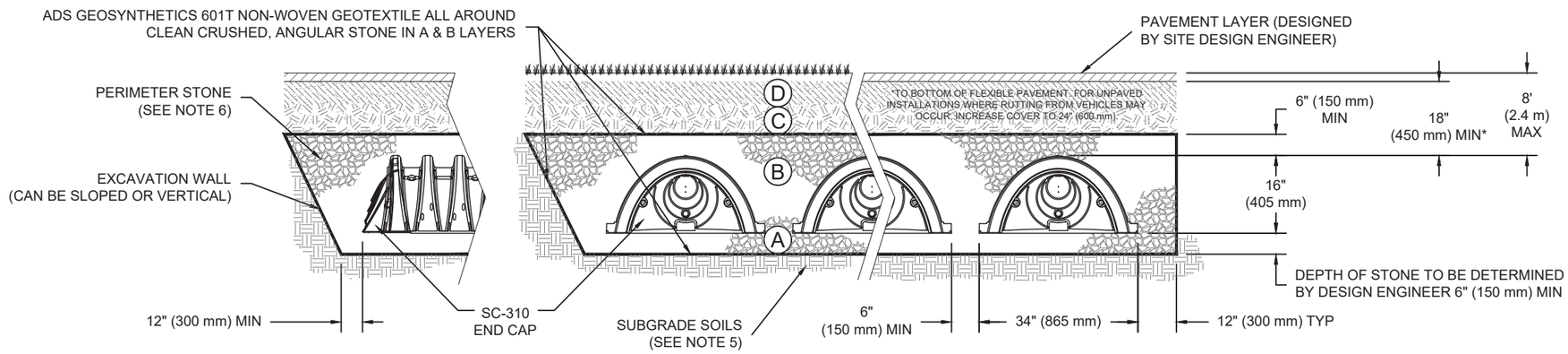

NOTES:

1. SC-310 CHAMBERS SHALL CONFORM TO THE REQUIREMENTS OF ASTM F2418 "STANDARD SPECIFICATION FOR POLYPROPYLENE (PP) CORRUGATED WALL STORMWATER COLLECTION CHAMBERS", OR ASTM F2922 "STANDARD SPECIFICATION FOR POLYETHYLENE (PE) CORRUGATED WALL STORMWATER COLLECTION CHAMBERS".
2. SC-310 CHAMBERS SHALL BE DESIGNED IN ACCORDANCE WITH ASTM F2787 "STANDARD PRACTICE FOR STRUCTURAL DESIGN OF THERMOPLASTIC CORRUGATED WALL STORMWATER COLLECTION CHAMBERS".
3. "ACCEPTABLE FILL MATERIALS" TABLE ABOVE PROVIDES MATERIAL LOCATIONS, DESCRIPTIONS, GRADATIONS, AND COMPACTION REQUIREMENTS FOR FOUNDATION, EMBEDMENT, AND FILL MATERIALS.
4. THE "SITE DESIGN ENGINEER" REFERS TO THE ENGINEER RESPONSIBLE FOR THE DESIGN AND LAYOUT OF THE STORMTECH CHAMBERS FOR THIS PROJECT.
5. THE SITE DESIGN ENGINEER IS RESPONSIBLE FOR ASSESSING THE BEARING RESISTANCE (ALLOWABLE BEARING CAPACITY) OF THE SUBGRADE SOILS AND THE DEPTH OF FOUNDATION STONE WITH CONSIDERATION FOR THE RANGE OF EXPECTED SOIL MOISTURE CONDITIONS.
6. PERIMETER STONE MUST BE EXTENDED HORIZONTALLY TO THE EXCAVATION WALL FOR BOTH VERTICAL AND SLOPED EXCAVATION WALLS.
7. ONCE LAYER 'C' IS PLACED, ANY SOIL/MATERIAL CAN BE PLACED IN LAYER 'D' UP TO THE FINISHED GRADE. MOST PAVEMENT SUBBASE SOILS CAN BE USED TO REPLACE THE MATERIAL REQUIREMENTS OF LAYER 'C' OR 'D' AT THE SITE DESIGN ENGINEER'S DISCRETION.

The Meadowlands (A-2)
Madison, WI

DATE: 01/29/2019 DRAWN: BA
PROJECT #: Tool CHECKED: ---

REV	DRW	CHK	DESCRIPTION

StormTech® Detention•Retention•Water Quality
70 INWOOD ROAD, SUITE 3 | ROCKY HILL | CT | 06067
860-529-8188 | 888-892-2694 | WWW.STORMTECH.COM

ADS® ADVANCED DRAINAGE SYSTEMS, INC.
4640 TRUEMAN BLVD
HILLIARD, OH 43026
1-800-733-7473

THIS DRAWING HAS BEEN PREPARED BASED ON INFORMATION PROVIDED TO ADS UNDER THE DIRECTION OF THE SITE DESIGN ENGINEER OR OTHER PROJECT REPRESENTATIVE. THE SITE DESIGN ENGINEER SHALL REVIEW THIS DRAWING PRIOR TO CONSTRUCTION. IT IS THE ULTIMATE RESPONSIBILITY OF THE SITE DESIGN ENGINEER TO ENSURE THAT THE PRODUCT(S) DEPICTED AND ALL ASSOCIATED DETAILS MEET ALL APPLICABLE LAWS, REGULATIONS, AND PROJECT REQUIREMENTS.

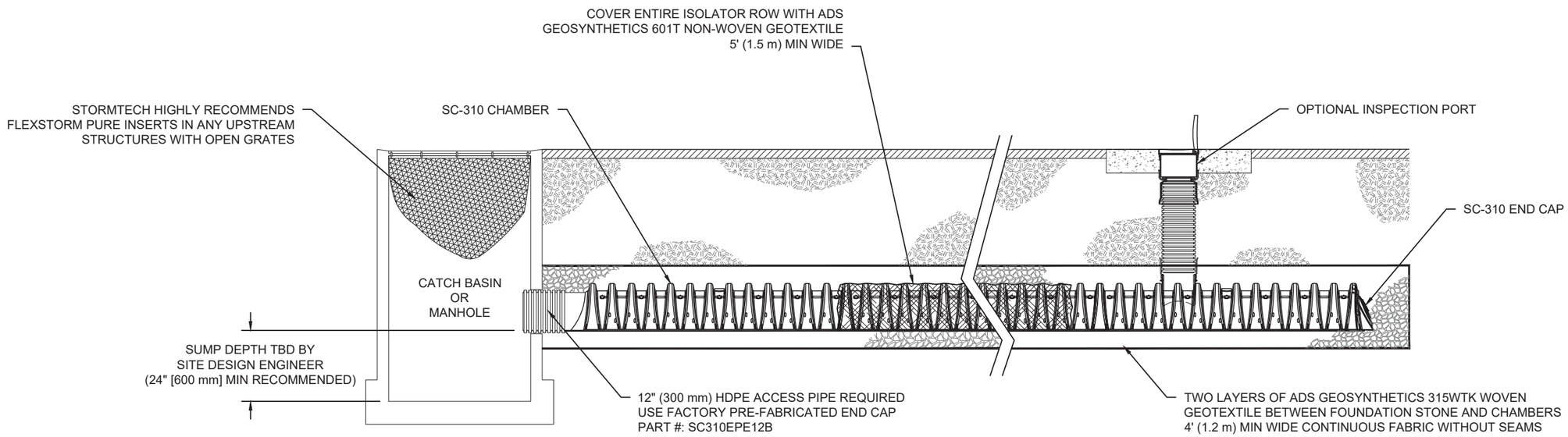

SC-310 ISOLATOR ROW DETAIL

NTS

INSPECTION & MAINTENANCE

STEP 1) INSPECT ISOLATOR ROW FOR SEDIMENT
- A. INSPECTION PORTS (IF PRESENT)
  - A.1. REMOVE/OPEN LID ON NYLOPLAST INLINE DRAIN
  - A.2. REMOVE AND CLEAN FLEXSTORM FILTER IF INSTALLED
  - A.3. USING A FLASHLIGHT AND STADIA ROD, MEASURE DEPTH OF SEDIMENT AND RECORD ON MAINTENANCE LOG
  - A.4. LOWER A CAMERA INTO ISOLATOR ROW FOR VISUAL INSPECTION OF SEDIMENT LEVELS (OPTIONAL)
  - A.5. IF SEDIMENT IS AT, OR ABOVE, 3" (80 mm) PROCEED TO STEP 2. IF NOT, PROCEED TO STEP 3.
- B. ALL ISOLATOR ROWS
  - B.1. REMOVE COVER FROM STRUCTURE AT UPSTREAM END OF ISOLATOR ROW
  - B.2. USING A FLASHLIGHT, INSPECT DOWN THE ISOLATOR ROW THROUGH OUTLET PIPE
    - i) MIRRORS ON POLES OR CAMERAS MAY BE USED TO AVOID A CONFINED SPACE ENTRY
    - ii) FOLLOW OSHA REGULATIONS FOR CONFINED SPACE ENTRY IF ENTERING MANHOLE
  - B.3. IF SEDIMENT IS AT, OR ABOVE, 3" (80 mm) PROCEED TO STEP 2. IF NOT, PROCEED TO STEP 3.

STEP 2) CLEAN OUT ISOLATOR ROW USING THE JETVAC PROCESS
- A. A FIXED CULVERT CLEANING NOZZLE WITH REAR FACING SPREAD OF 45" (1.1 m) OR MORE IS PREFERRED
- B. APPLY MULTIPLE PASSES OF JETVAC UNTIL BACKFLUSH WATER IS CLEAN
- C. VACUUM STRUCTURE SUMP AS REQUIRED

STEP 3) REPLACE ALL COVERS, GRATES, FILTERS, AND LIDS; RECORD OBSERVATIONS AND ACTIONS.

STEP 4) INSPECT AND CLEAN BASINS AND MANHOLES UPSTREAM OF THE STORMTECH SYSTEM.

NOTES

1. INSPECT EVERY 6 MONTHS DURING THE FIRST YEAR OF OPERATION. ADJUST THE INSPECTION INTERVAL BASED ON PREVIOUS OBSERVATIONS OF SEDIMENT ACCUMULATION AND HIGH WATER ELEVATIONS.
2. CONDUCT JETTING AND VACTORING ANNUALLY OR WHEN INSPECTION SHOWS THAT MAINTENANCE IS NECESSARY.

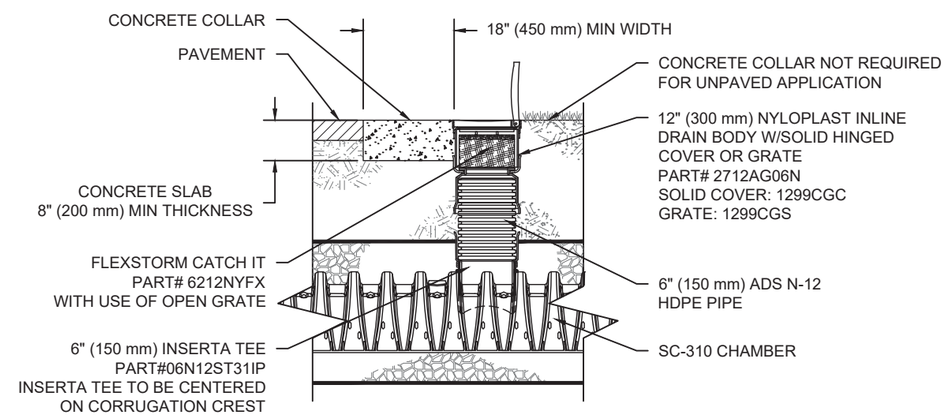

SC-310 6" INSPECTION PORT DETAIL

NTS

The Meadowlands (A-2)
Madison, WI

DATE: 01/29/2019 DRAWN: BA
PROJECT #: Tool CHECKED: ---

REV	DRW	CHK	DESCRIPTION

StormTech®
Detention•Retention•Water Quality
70 INWOOD ROAD, SUITE 3 | ROCKY HILL | CT | 06067
860-529-8188 | 888-892-2694 | WWW.STORMTECH.COM

ADS®
ADVANCED DRAINAGE SYSTEMS, INC.
4640 TRUEMAN BLVD
HILLIARD, OH 43026
1-800-733-7473

THIS DRAWING HAS BEEN PREPARED BASED ON INFORMATION PROVIDED TO ADS UNDER THE DIRECTION OF THE SITE DESIGN ENGINEER OR OTHER PROJECT REPRESENTATIVE. THE SITE DESIGN ENGINEER SHALL REVIEW THIS DRAWING PRIOR TO CONSTRUCTION. IT IS THE ULTIMATE RESPONSIBILITY OF THE SITE DESIGN ENGINEER TO ENSURE THAT THE PRODUCT(S) DEPICTED AND ALL ASSOCIATED DETAILS MEET ALL APPLICABLE LAWS, REGULATIONS, AND PROJECT REQUIREMENTS.

UNDERDRAIN DETAIL

NTS

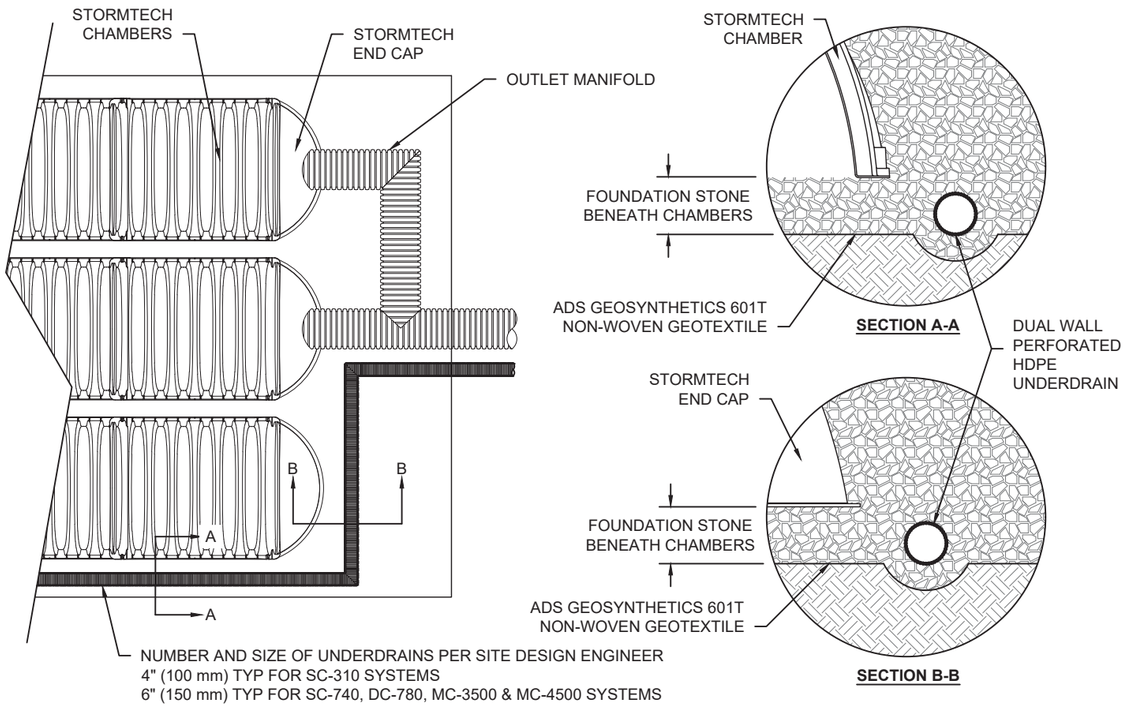

SC-310 TECHNICAL SPECIFICATION

NTS

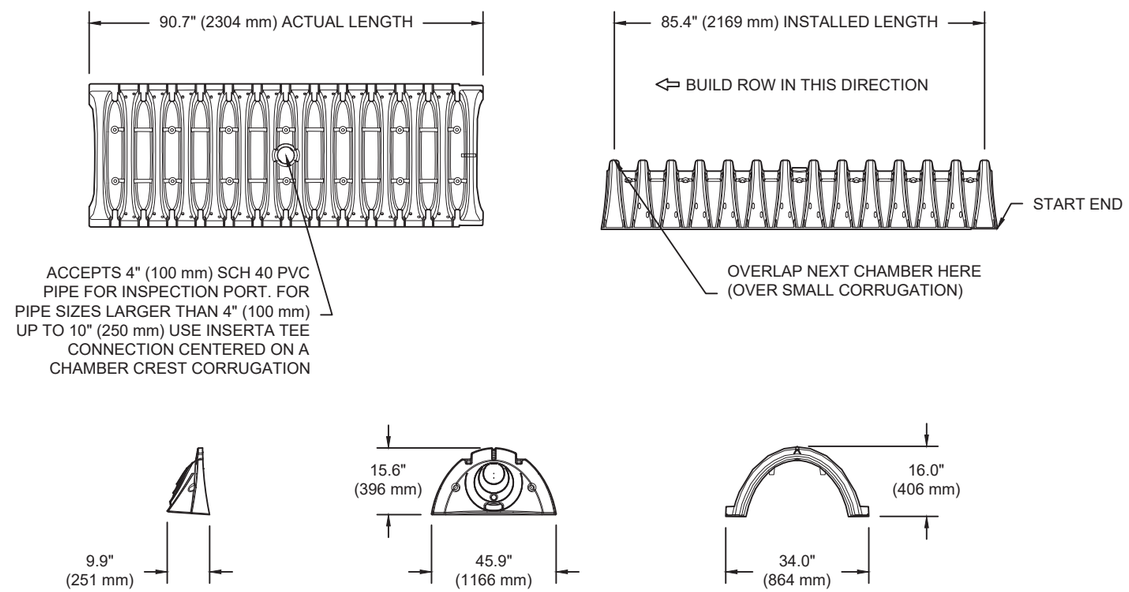

NOMINAL CHAMBER SPECIFICATIONS

SIZE (W X H X INSTALLED LENGTH)	34.0" X 16.0" X 85.4"	(864 mm X 406 mm X 2169 mm)
CHAMBER STORAGE	14.7 CUBIC FEET	(0.42 m³)
MINIMUM INSTALLED STORAGE*	31.0 CUBIC FEET	(0.88 m³)
WEIGHT	35.0 lbs.	(16.8 kg)

*ASSUMES 6" (152 mm) ABOVE, BELOW, AND BETWEEN CHAMBERS

INSERTA TEE DETAIL

NTS

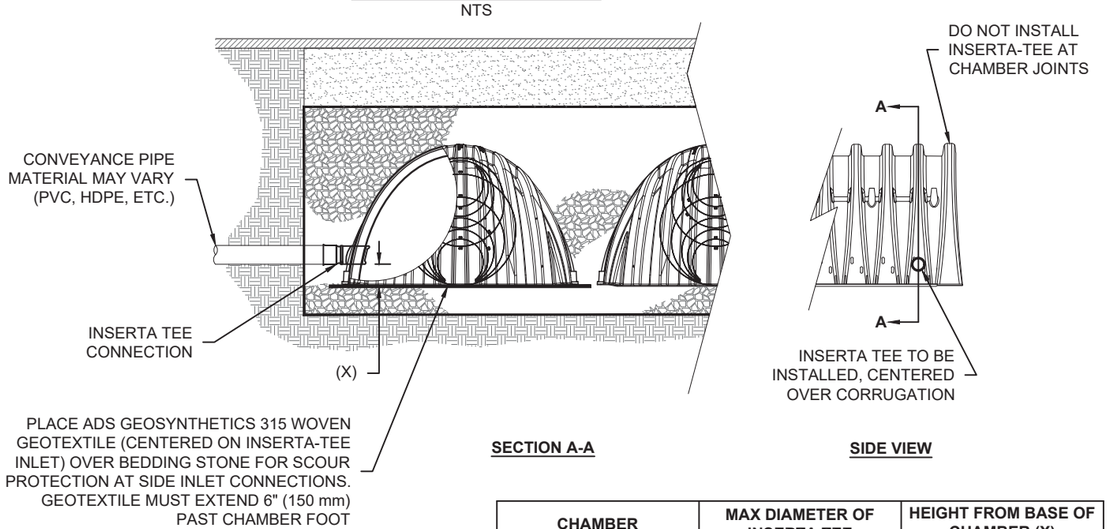

CHAMBER	MAX DIAMETER OF INSERTA TEE	HEIGHT FROM BASE OF CHAMBER (X)
SC-310	6" (150 mm)	4" (100 mm)
SC-740	10" (250 mm)	4" (100 mm)
DC-780	10" (250 mm)	4" (100 mm)
MC-3500	12" (300 mm)	6" (150 mm)
MC-4500	12" (300 mm)	8" (200 mm)
INSERTA TEE FITTINGS AVAILABLE FOR SDR 26, SDR 35, SCH 40 IPS GASKETED & SOLVENT WELD, N-12, HP STORM, C-900 OR DUCTILE IRON		

NOTE:
PART NUMBERS WILL VARY BASED ON INLET PIPE MATERIALS. CONTACT STORMTECH FOR MORE INFORMATION.

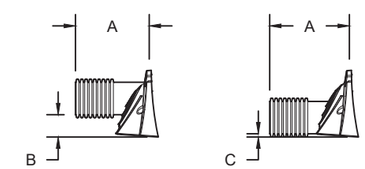

STUBS AT BOTTOM OF END CAP FOR PART NUMBERS ENDING WITH "B"
STUBS AT TOP OF END CAP FOR PART NUMBERS ENDING WITH "T"

PART #	STUB	A	B	C
SC310EPE06T / SC310EPE06TPC	6" (150 mm)	9.6" (244 mm)	5.8" (147 mm)	---
SC310EPE06B / SC310EPE06BPC			---	0.5" (13 mm)
SC310EPE08T / SC310EPE08TPC	8" (200 mm)	11.9" (302 mm)	3.5" (89 mm)	---
SC310EPE08B / SC310EPE08BPC			---	0.6" (15 mm)
SC310EPE10T / SC310EPE10TPC	10" (250 mm)	12.7" (323 mm)	1.4" (36 mm)	---
SC310EPE10B / SC310EPE10BPC			---	0.7" (18 mm)
SC310EPE12B	12" (300 mm)	13.5" (343 mm)	---	0.9" (23 mm)

ALL STUBS, EXCEPT FOR THE SC310EPE12B ARE PLACED AT BOTTOM OF END CAP SUCH THAT THE OUTSIDE DIAMETER OF THE STUB IS FLUSH WITH THE BOTTOM OF THE END CAP. FOR ADDITIONAL INFORMATION CONTACT STORMTECH AT 1-888-892-2694.

* FOR THE SC310EPE12B THE 12" (300 mm) STUB LIES BELOW THE BOTTOM OF THE END CAP APPROXIMATELY 0.25" (6 mm). BACKFILL MATERIAL SHOULD BE REMOVED FROM BELOW THE N-12 STUB SO THAT THE FITTING SITS LEVEL.

NOTE: ALL DIMENSIONS ARE NOMINAL

The Meadowlands (A-2)
Madison, WI

DATE: 01/29/2019 DRAWN: BA
PROJECT #: Tool CHECKED: ---

REV	DRW	CHK	DESCRIPTION

StormTech® Detention•Retention•Water Quality
70 INWOOD ROAD, SUITE 3 | ROCKY HILL | CT | 06067
860-529-8188 | 888-892-2694 | WWW.STORMTECH.COM

ADS® ADVANCED DRAINAGE SYSTEMS, INC.
4640 TRUEMAN BLVD
HILLIARD, OH 43026
1-800-733-7473

THIS DRAWING HAS BEEN PREPARED BASED ON INFORMATION PROVIDED TO ADS UNDER THE DIRECTION OF THE SITE DESIGN ENGINEER OR OTHER PROJECT REPRESENTATIVE. THE SITE DESIGN ENGINEER SHALL REVIEW THIS DRAWING PRIOR TO CONSTRUCTION. IT IS THE ULTIMATE RESPONSIBILITY OF THE SITE DESIGN ENGINEER TO ENSURE THAT THE PRODUCT(S) DEPICTED AND ALL ASSOCIATED DETAILS MEET ALL APPLICABLE LAWS, REGULATIONS, AND PROJECT REQUIREMENTS.

ADVANCED DRAINAGE SYSTEMS, INC.

SiteASSIST™ by StormTech

FOR STORMTECH INSTRUCTIONS, DOWNLOAD THE INSTALLATION APP

The Meadowlands (A-3)

Madison, WI

STORMTECH CHAMBER SPECIFICATIONS

1. CHAMBERS SHALL BE STORMTECH SC-740, SC-310, OR APPROVED EQUAL.
2. CHAMBERS SHALL BE MANUFACTURED FROM VIRGIN POLYPROPYLENE OR POLYETHYLENE RESINS.
3. CHAMBER ROWS SHALL PROVIDE CONTINUOUS, UNOBSTRUCTED INTERNAL SPACE WITH NO INTERNAL SUPPORT PANELS THAT WOULD IMPEDE FLOW OR LIMIT ACCESS FOR INSPECTION.
4. THE STRUCTURAL DESIGN OF THE CHAMBERS, THE STRUCTURAL BACKFILL, AND THE INSTALLATION REQUIREMENTS SHALL ENSURE THAT THE LOAD FACTORS SPECIFIED IN THE AASHTO LRFD BRIDGE DESIGN SPECIFICATIONS, SECTION 12.12, ARE MET FOR: 1) LONG-DURATION DEAD LOADS AND 2) SHORT-DURATION LIVE LOADS, BASED ON THE AASHTO DESIGN TRUCK WITH CONSIDERATION FOR IMPACT AND MULTIPLE VEHICLE PRESENCES.
5. CHAMBERS SHALL MEET ASTM F2922 (POLYETHYLENE) OR ASTM F2418 (POLYPROPYLENE), "STANDARD SPECIFICATION FOR THERMOPLASTIC CORRUGATED WALL STORMWATER COLLECTION CHAMBERS".
6. CHAMBERS SHALL BE DESIGNED AND ALLOWABLE LOADS DETERMINED IN ACCORDANCE WITH ASTM F2787, "STANDARD PRACTICE FOR STRUCTURAL DESIGN OF THERMOPLASTIC CORRUGATED WALL STORMWATER COLLECTION CHAMBERS".
7. ONLY CHAMBERS THAT ARE APPROVED BY THE SITE DESIGN ENGINEER WILL BE ALLOWED. THE CHAMBER MANUFACTURER SHALL SUBMIT THE FOLLOWING UPON REQUEST TO THE SITE DESIGN ENGINEER FOR APPROVAL BEFORE DELIVERING CHAMBERS TO THE PROJECT SITE:
   a. A STRUCTURAL EVALUATION SEALED BY A REGISTERED PROFESSIONAL ENGINEER THAT DEMONSTRATES THAT THE SAFETY FACTORS ARE GREATER THAN OR EQUAL TO 1.95 FOR DEAD LOAD AND 1.75 FOR LIVE LOAD, THE MINIMUM REQUIRED BY ASTM F2787 AND BY AASHTO FOR THERMOPLASTIC PIPE.
   b. A STRUCTURAL EVALUATION SEALED BY A REGISTERED PROFESSIONAL ENGINEER THAT DEMONSTRATES THAT THE LOAD FACTORS SPECIFIED IN THE AASHTO LRFD BRIDGE DESIGN SPECIFICATIONS, SECTION 12.12, ARE MET. THE 50 YEAR CREEP MODULUS DATA SPECIFIED IN ASTM F2418 OR ASTM F2922 MUST BE USED AS PART OF THE AASHTO STRUCTURAL EVALUATION TO VERIFY LONG-TERM PERFORMANCE.
   c. STRUCTURAL CROSS SECTION DETAIL ON WHICH THE STRUCTURAL EVALUATION IS BASED.
8. CHAMBERS AND END CAPS SHALL BE PRODUCED AT AN ISO 9001 CERTIFIED MANUFACTURING FACILITY.

IMPORTANT - NOTES FOR THE BIDDING AND INSTALLATION OF THE SC-310/SC-740 SYSTEM

1. STORMTECH SC-310 & SC-740 CHAMBERS SHALL NOT BE INSTALLED UNTIL THE MANUFACTURER'S REPRESENTATIVE HAS COMPLETED A PRE-CONSTRUCTION MEETING WITH THE INSTALLERS.
2. STORMTECH SC-310 & SC-740 CHAMBERS SHALL BE INSTALLED IN ACCORDANCE WITH THE "STORMTECH SC-310/SC-740/SC-780 CONSTRUCTION GUIDE".
3. CHAMBERS ARE NOT TO BE BACKFILLED WITH A DOZER OR AN EXCAVATOR SITUATED OVER THE CHAMBERS.

   STORMTECH RECOMMENDS 3 BACKFILL METHODS:
   - STONESHOOTER LOCATED OFF THE CHAMBER BED.
   - BACKFILL AS ROWS ARE BUILT USING AN EXCAVATOR ON THE FOUNDATION STONE OR SUBGRADE.
   - BACKFILL FROM OUTSIDE THE EXCAVATION USING A LONG BOOM HOE OR EXCAVATOR.
4. THE FOUNDATION STONE SHALL BE LEVELED AND COMPACTED PRIOR TO PLACING CHAMBERS.
5. JOINTS BETWEEN CHAMBERS SHALL BE PROPERLY SEATED PRIOR TO PLACING STONE.
6. MAINTAIN MINIMUM - 6" (150 mm) SPACING BETWEEN THE CHAMBER ROWS.
7. EMBEDMENT STONE SURROUNDING CHAMBERS MUST BE A CLEAN, CRUSHED, ANGULAR STONE 3/4-2" (20-50 mm).
8. THE CONTRACTOR MUST REPORT ANY DISCREPANCIES WITH CHAMBER FOUNDATION MATERIALS BEARING CAPACITIES TO THE SITE DESIGN ENGINEER.
9. ADS RECOMMENDS THE USE OF "FLEXSTORM CATCH IT" INSERTS DURING CONSTRUCTION FOR ALL INLETS TO PROTECT THE SUBSURFACE STORMWATER MANAGEMENT SYSTEM FROM CONSTRUCTION SITE RUNOFF.

NOTES FOR CONSTRUCTION EQUIPMENT

1. STORMTECH SC-310 & SC-740 CHAMBERS SHALL BE INSTALLED IN ACCORDANCE WITH THE "STORMTECH SC-310/SC-740/DC-780 CONSTRUCTION GUIDE".
2. THE USE OF CONSTRUCTION EQUIPMENT OVER SC-310 & SC-740 CHAMBERS IS LIMITED:
   - NO EQUIPMENT IS ALLOWED ON BARE CHAMBERS.
   - NO RUBBER TIRED LOADERS, DUMP TRUCKS, OR EXCAVATORS ARE ALLOWED UNTIL PROPER FILL DEPTHS ARE REACHED IN ACCORDANCE WITH THE "STORMTECH SC-310/SC-740/DC-780 CONSTRUCTION GUIDE".
   - WEIGHT LIMITS FOR CONSTRUCTION EQUIPMENT CAN BE FOUND IN THE "STORMTECH SC-310/SC-740/DC-780 CONSTRUCTION GUIDE".
3. FULL 36" (900 mm) OF STABILIZED COVER MATERIALS OVER THE CHAMBERS IS REQUIRED FOR DUMP TRUCK TRAVEL OR DUMPING.

USE OF A DOZER TO PUSH EMBEDMENT STONE BETWEEN THE ROWS OF CHAMBERS MAY CAUSE DAMAGE TO THE CHAMBERS AND IS NOT AN ACCEPTABLE BACKFILL METHOD. ANY CHAMBERS DAMAGED BY THE "DUMP AND PUSH" METHOD ARE NOT COVERED UNDER THE STORMTECH STANDARD WARRANTY.

CONTACT STORMTECH AT 1-888-892-2694 WITH ANY QUESTIONS ON INSTALLATION REQUIREMENTS OR WEIGHT LIMITS FOR CONSTRUCTION EQUIPMENT.

©2015 ADS, INC.

CONCEPTUAL LAYOUT

(63) STORMTECH SC-310 CHAMBERS
(6) STORMTECH SC-310 END CAPS
INSTALLED WITH 6 " COVER STONE, 24 " BASE STONE, 40% STONE VOID
INSTALLED SYSTEM VOLUME: 3485 CF
AREA OF SYSTEM: 1909 **FT²**
PERIMETER OF SYSTEM: 344 **FT**

COMPUTER GENERATED CONCEPTUAL LAYOUT - NOT FOR CONSTRUCTION

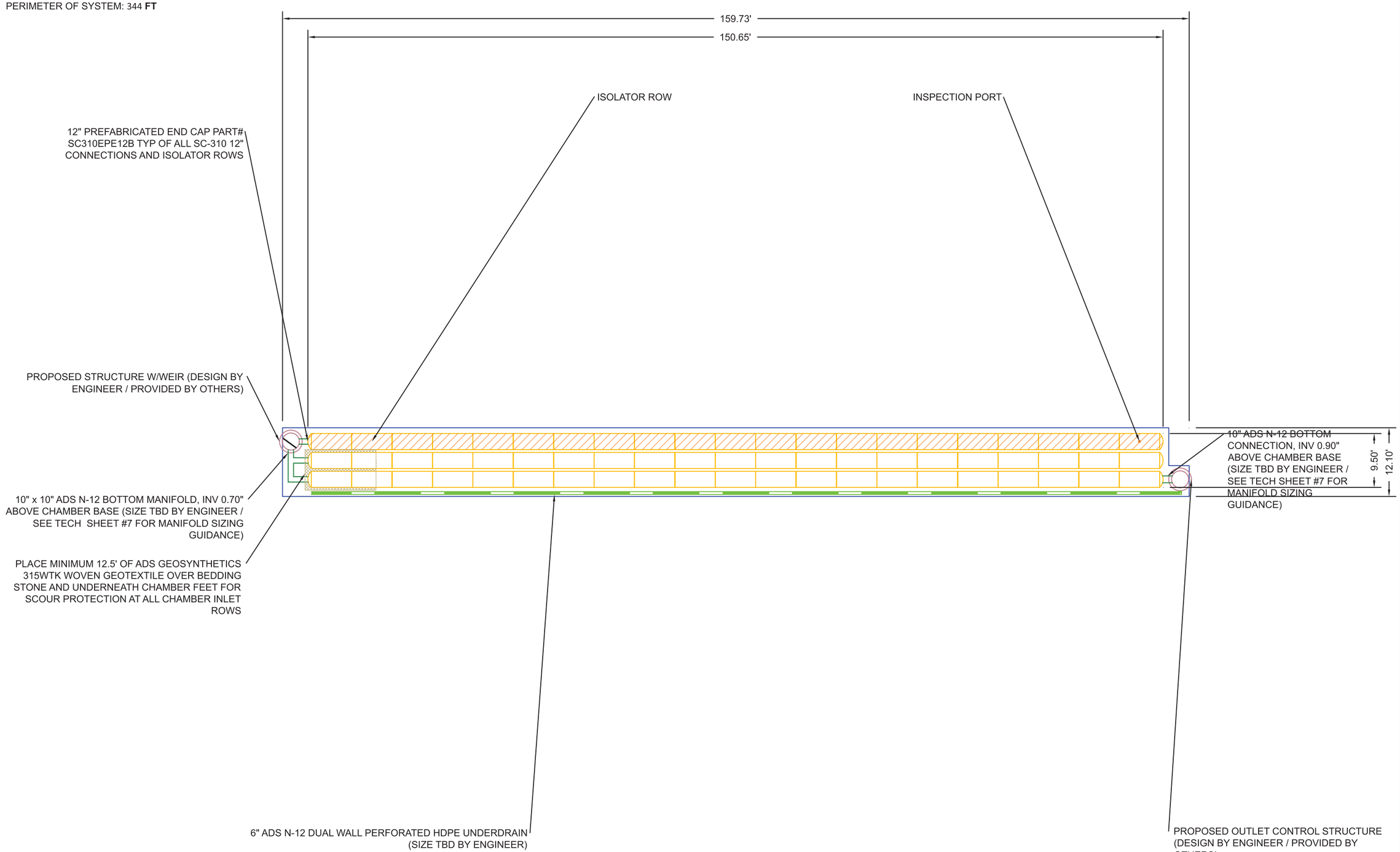

The Meadowlands (A-3)
Madison, WI

DATE: 01/29/2019 | DRAWN: BA
PROJECT #: Tool | CHECKED: ---

REV	DRW	CHK	DESCRIPTION

StormTech®
Detention• Retention• Water Quality
70 INWOOD ROAD, SUITE 3 | ROCKY HILL | CT | 06067
860-529-8188 |888-892-2694 | WWW.STORMTECH.COM

ADS®
ADVANCED DRAINAGE SYSTEMS, INC.
4640 TRUEMAN BLVD
HILLIARD, OH 43026
1-800-733-7473

NOT TO SCALE

THIS DRAWING HAS BEEN PREPARED BASED ON INFORMATION PROVIDED TO ADS UNDER THE DIRECTION OF THE SITE DESIGN ENGINEER OR OTHER PROJECT REPRESENTATIVE. THE SITE DESIGN ENGINEER SHALL REVIEW THIS DRAWING PRIOR TO CONSTRUCTION. IT IS THE ULTIMATE RESPONSIBILITY OF THE SITE DESIGN ENGINEER TO ENSURE THAT THE PRODUCT(S) DEPICTED AND ALL ASSOCIATED DETAILS MEET ALL APPLICABLE LAWS, REGULATIONS, AND PROJECT REQUIREMENTS.

ACCEPTABLE FILL MATERIALS: STORMTECH SC-310 CHAMBER SYSTEMS

MATERIAL LOCATION		DESCRIPTION	AASHTO MATERIAL CLASSIFICATIONS	COMPACTION / DENSITY REQUIREMENT
D	**FINAL FILL:** FILL MATERIAL FOR LAYER 'D' STARTS FROM THE TOP OF THE 'C' LAYER TO THE BOTTOM OF FLEXIBLE PAVEMENT OR UNPAVED FINISHED GRADE ABOVE. NOTE THAT PAVEMENT SUBBASE MAY BE PART OF THE 'D' LAYER	ANY SOIL/ROCK MATERIALS, NATIVE SOILS, OR PER ENGINEER'S PLANS. CHECK PLANS FOR PAVEMENT SUBGRADE REQUIREMENTS.	N/A	PREPARE PER SITE DESIGN ENGINEER'S PLANS. PAVED INSTALLATIONS MAY HAVE STRINGENT MATERIAL AND PREPARATION REQUIREMENTS.
C	**INITIAL FILL:** FILL MATERIAL FOR LAYER 'C' STARTS FROM THE TOP OF THE EMBEDMENT STONE ('B' LAYER) TO 18" (450 mm) ABOVE THE TOP OF THE CHAMBER. NOTE THAT PAVEMENT SUBBASE MAY BE A PART OF THE 'C' LAYER.	GRANULAR WELL-GRADED SOIL/AGGREGATE MIXTURES, <35% FINES OR PROCESSED AGGREGATE. MOST PAVEMENT SUBBASE MATERIALS CAN BE USED IN LIEU OF THIS LAYER.	AASHTO M145[1] A-1, A-2-4, A-3 OR AASHTO M43[1] 3, 357, 4, 467, 5, 56, 57, 6, 67, 68, 7, 78, 8, 89, 9, 10	BEGIN COMPACTIONS AFTER 12" (300 mm) OF MATERIAL OVER THE CHAMBERS IS REACHED. COMPACT ADDITIONAL LAYERS IN 6" (150 mm) MAX LIFTS TO A MIN. 95% PROCTOR DENSITY FOR WELL GRADED MATERIAL AND 95% RELATIVE DENSITY FOR PROCESSED AGGREGATE MATERIALS. ROLLER GROSS VEHICLE WEIGHT NOT TO EXCEED 12,000 lbs (53 kN). DYNAMIC FORCE NOT TO EXCEED 20,000 lbs (89 kN).
B	**EMBEDMENT STONE:** FILL SURROUNDING THE CHAMBERS FROM THE FOUNDATION STONE ('A' LAYER) TO THE 'C' LAYER ABOVE.	CLEAN, CRUSHED, ANGULAR STONE, NOMINAL SIZE DISTRIBUTION BETWEEN 3/4-2 INCH (20-50 mm)	AASHTO M43[1] 3, 357, 4, 467, 5, 56, 57	NO COMPACTION REQUIRED.
A	**FOUNDATION STONE:** FILL BELOW CHAMBERS FROM THE SUBGRADE UP TO THE FOOT (BOTTOM) OF THE CHAMBER.	CLEAN, CRUSHED, ANGULAR STONE, NOMINAL SIZE DISTRIBUTION BETWEEN 3/4-2 INCH (20-50 mm)	AASHTO M43[1] 3, 357, 4, 467, 5, 56, 57	PLATE COMPACT OR ROLL TO ACHIEVE A FLAT SURFACE. [2 3]

PLEASE NOTE:
1. THE LISTED AASHTO DESIGNATIONS ARE FOR GRADATIONS ONLY. THE STONE MUST ALSO BE CLEAN, CRUSHED, ANGULAR. FOR EXAMPLE, A SPECIFICATION FOR #4 STONE WOULD STATE: "CLEAN, CRUSHED, ANGULAR NO. 4 (AASHTO M43) STONE".
2. STORMTECH COMPACTION REQUIREMENTS ARE MET FOR 'A' LOCATION MATERIALS WHEN PLACED AND COMPACTED IN 6" (150 mm) (MAX) LIFTS USING TWO FULL COVERAGES WITH A VIBRATORY COMPACTOR.
3. WHERE INFILTRATION SURFACES MAY BE COMPROMISED BY COMPACTION, FOR STANDARD DESIGN LOAD CONDITIONS, A FLAT SURFACE MAY BE ACHIEVED BY RAKING OR DRAGGING WITHOUT COMPACTION EQUIPMENT. FOR SPECIAL LOAD DESIGNS, CONTACT STORMTECH FOR COMPACTION REQUIREMENTS.

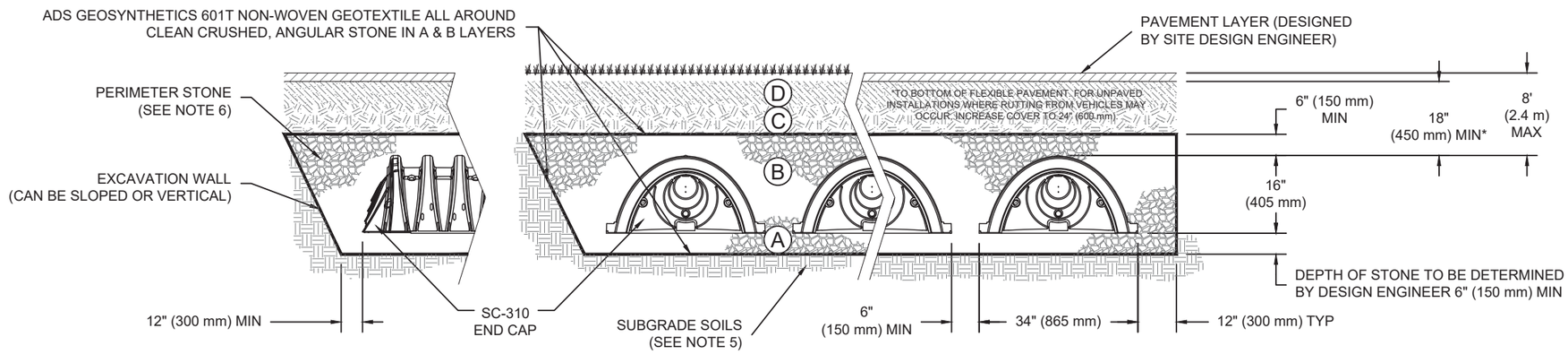

NOTES:

1. SC-310 CHAMBERS SHALL CONFORM TO THE REQUIREMENTS OF ASTM F2418 "STANDARD SPECIFICATION FOR POLYPROPYLENE (PP) CORRUGATED WALL STORMWATER COLLECTION CHAMBERS", OR ASTM F2922 "STANDARD SPECIFICATION FOR POLYETHYLENE (PE) CORRUGATED WALL STORMWATER COLLECTION CHAMBERS".
2. SC-310 CHAMBERS SHALL BE DESIGNED IN ACCORDANCE WITH ASTM F2787 "STANDARD PRACTICE FOR STRUCTURAL DESIGN OF THERMOPLASTIC CORRUGATED WALL STORMWATER COLLECTION CHAMBERS".
3. "ACCEPTABLE FILL MATERIALS" TABLE ABOVE PROVIDES MATERIAL LOCATIONS, DESCRIPTIONS, GRADATIONS, AND COMPACTION REQUIREMENTS FOR FOUNDATION, EMBEDMENT, AND FILL MATERIALS.
4. THE "SITE DESIGN ENGINEER" REFERS TO THE ENGINEER RESPONSIBLE FOR THE DESIGN AND LAYOUT OF THE STORMTECH CHAMBERS FOR THIS PROJECT.
5. THE SITE DESIGN ENGINEER IS RESPONSIBLE FOR ASSESSING THE BEARING RESISTANCE (ALLOWABLE BEARING CAPACITY) OF THE SUBGRADE SOILS AND THE DEPTH OF FOUNDATION STONE WITH CONSIDERATION FOR THE RANGE OF EXPECTED SOIL MOISTURE CONDITIONS.
6. PERIMETER STONE MUST BE EXTENDED HORIZONTALLY TO THE EXCAVATION WALL FOR BOTH VERTICAL AND SLOPED EXCAVATION WALLS.
7. ONCE LAYER 'C' IS PLACED, ANY SOIL/MATERIAL CAN BE PLACED IN LAYER 'D' UP TO THE FINISHED GRADE. MOST PAVEMENT SUBBASE SOILS CAN BE USED TO REPLACE THE MATERIAL REQUIREMENTS OF LAYER 'C' OR 'D' AT THE SITE DESIGN ENGINEER'S DISCRETION.

The Meadowlands (A-3)
Madison, WI

DATE: 01/29/2019 DRAWN: BA
PROJECT #: Tool CHECKED: ---

REV	DRW	CHK	DESCRIPTION

StormTech® Detention•Retention•Water Quality
70 INWOOD ROAD, SUITE 3 | ROCKY HILL | CT | 06067
860-529-8188 | 888-892-2694 | WWW.STORMTECH.COM

ADS® ADVANCED DRAINAGE SYSTEMS, INC.
4640 TRUEMAN BLVD
HILLIARD, OH 43026
1-800-733-7473

THIS DRAWING HAS BEEN PREPARED BASED ON INFORMATION PROVIDED TO ADS UNDER THE DIRECTION OF THE SITE DESIGN ENGINEER OR OTHER PROJECT REPRESENTATIVE. THE SITE DESIGN ENGINEER SHALL REVIEW THIS DRAWING PRIOR TO CONSTRUCTION. IT IS THE ULTIMATE RESPONSIBILITY OF THE SITE DESIGN ENGINEER TO ENSURE THAT THE PRODUCT(S) DEPICTED AND ALL ASSOCIATED DETAILS MEET ALL APPLICABLE LAWS, REGULATIONS, AND PROJECT REQUIREMENTS.

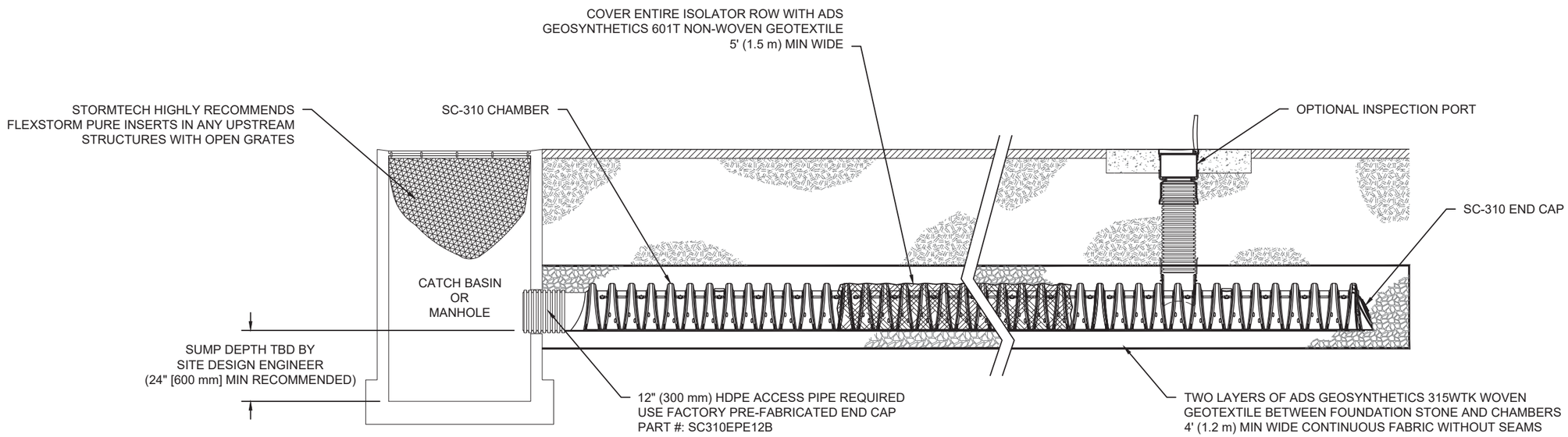

SC-310 ISOLATOR ROW DETAIL

NTS

INSPECTION & MAINTENANCE

STEP 1) INSPECT ISOLATOR ROW FOR SEDIMENT
- A. INSPECTION PORTS (IF PRESENT)
  - A.1. REMOVE/OPEN LID ON NYLOPLAST INLINE DRAIN
  - A.2. REMOVE AND CLEAN FLEXSTORM FILTER IF INSTALLED
  - A.3. USING A FLASHLIGHT AND STADIA ROD, MEASURE DEPTH OF SEDIMENT AND RECORD ON MAINTENANCE LOG
  - A.4. LOWER A CAMERA INTO ISOLATOR ROW FOR VISUAL INSPECTION OF SEDIMENT LEVELS (OPTIONAL)
  - A.5. IF SEDIMENT IS AT, OR ABOVE, 3" (80 mm) PROCEED TO STEP 2. IF NOT, PROCEED TO STEP 3.
- B. ALL ISOLATOR ROWS
  - B.1. REMOVE COVER FROM STRUCTURE AT UPSTREAM END OF ISOLATOR ROW
  - B.2. USING A FLASHLIGHT, INSPECT DOWN THE ISOLATOR ROW THROUGH OUTLET PIPE
    - i) MIRRORS ON POLES OR CAMERAS MAY BE USED TO AVOID A CONFINED SPACE ENTRY
    - ii) FOLLOW OSHA REGULATIONS FOR CONFINED SPACE ENTRY IF ENTERING MANHOLE
  - B.3. IF SEDIMENT IS AT, OR ABOVE, 3" (80 mm) PROCEED TO STEP 2. IF NOT, PROCEED TO STEP 3.

STEP 2) CLEAN OUT ISOLATOR ROW USING THE JETVAC PROCESS
- A. A FIXED CULVERT CLEANING NOZZLE WITH REAR FACING SPREAD OF 45" (1.1 m) OR MORE IS PREFERRED
- B. APPLY MULTIPLE PASSES OF JETVAC UNTIL BACKFLUSH WATER IS CLEAN
- C. VACUUM STRUCTURE SUMP AS REQUIRED

STEP 3) REPLACE ALL COVERS, GRATES, FILTERS, AND LIDS; RECORD OBSERVATIONS AND ACTIONS.

STEP 4) INSPECT AND CLEAN BASINS AND MANHOLES UPSTREAM OF THE STORMTECH SYSTEM.

NOTES

1. INSPECT EVERY 6 MONTHS DURING THE FIRST YEAR OF OPERATION. ADJUST THE INSPECTION INTERVAL BASED ON PREVIOUS OBSERVATIONS OF SEDIMENT ACCUMULATION AND HIGH WATER ELEVATIONS.
2. CONDUCT JETTING AND VACTORING ANNUALLY OR WHEN INSPECTION SHOWS THAT MAINTENANCE IS NECESSARY.

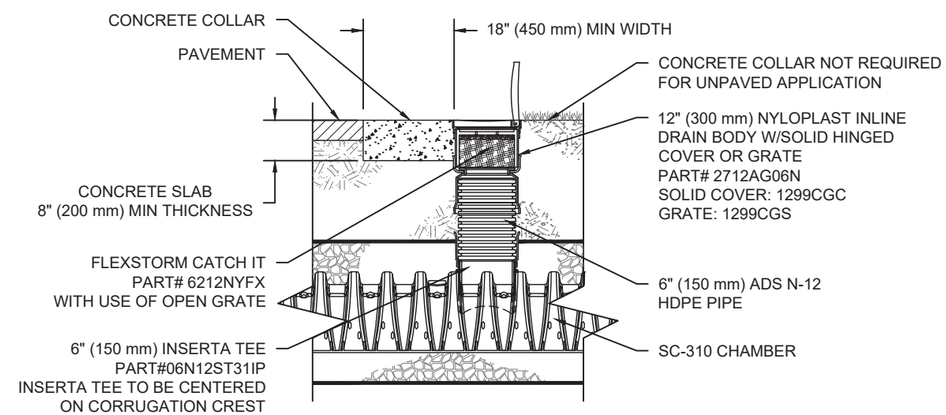

SC-310 6" INSPECTION PORT DETAIL

NTS

The Meadowlands (A-3)
Madison, WI

DATE: 01/29/2019 DRAWN: BA
PROJECT #: Tool CHECKED: ---

REV	DRW	CHK	DESCRIPTION

StormTech®
Detention • Retention • Water Quality
70 INWOOD ROAD, SUITE 3 | ROCKY HILL | CT | 06067
860-529-8188 | 888-892-2694 | WWW.STORMTECH.COM

ADS®
ADVANCED DRAINAGE SYSTEMS, INC.
4640 TRUEMAN BLVD
HILLIARD, OH 43026
1-800-733-7473

THIS DRAWING HAS BEEN PREPARED BASED ON INFORMATION PROVIDED TO ADS UNDER THE DIRECTION OF THE SITE DESIGN ENGINEER OR OTHER PROJECT REPRESENTATIVE. THE SITE DESIGN ENGINEER SHALL REVIEW THIS DRAWING PRIOR TO CONSTRUCTION. IT IS THE ULTIMATE RESPONSIBILITY OF THE SITE DESIGN ENGINEER TO ENSURE THAT THE PRODUCT(S) DEPICTED AND ALL ASSOCIATED DETAILS MEET ALL APPLICABLE LAWS, REGULATIONS, AND PROJECT REQUIREMENTS.

UNDERDRAIN DETAIL

NTS

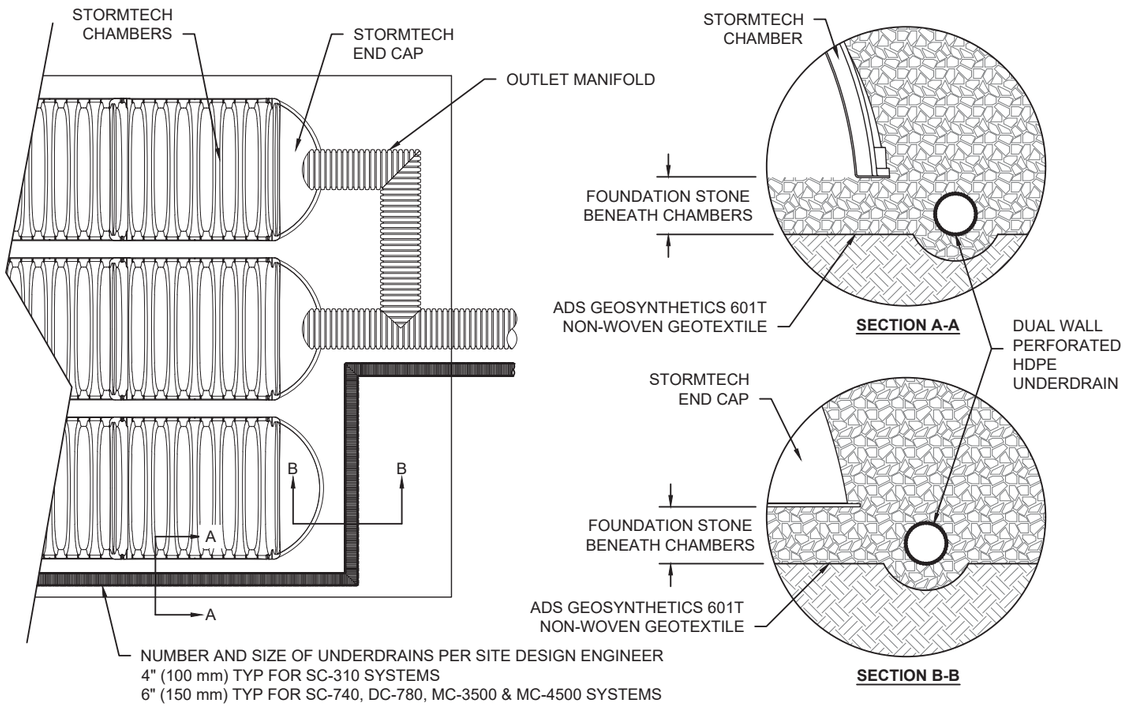

SC-310 TECHNICAL SPECIFICATION

NTS

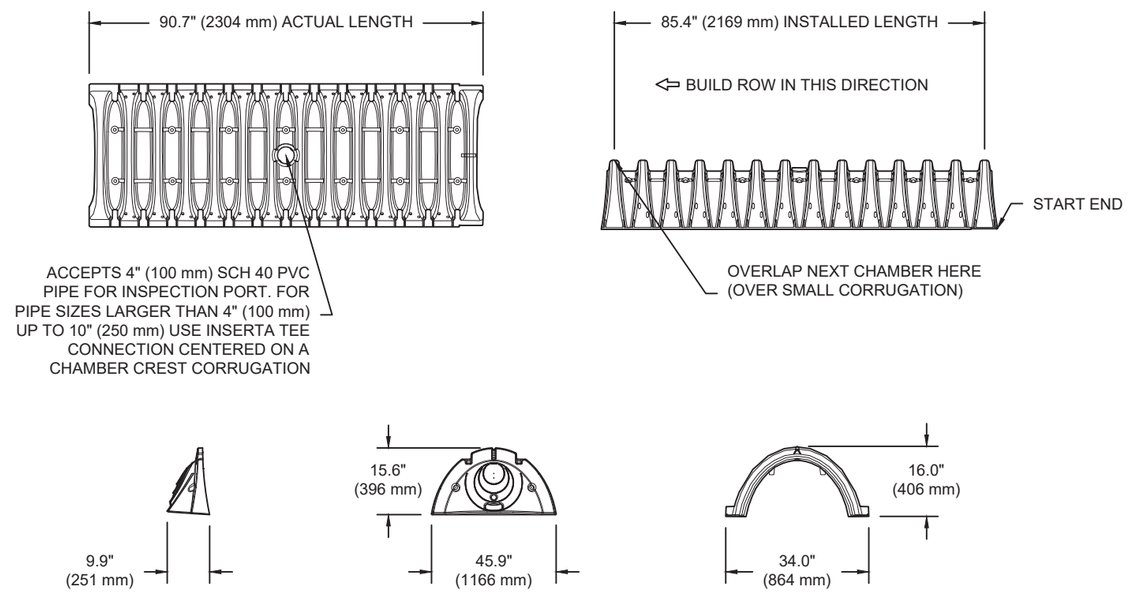

NOMINAL CHAMBER SPECIFICATIONS

SIZE (W X H X INSTALLED LENGTH)	34.0" X 16.0" X 85.4"	(864 mm X 406 mm X 2169 mm)
CHAMBER STORAGE	14.7 CUBIC FEET	(0.42 m³)
MINIMUM INSTALLED STORAGE*	31.0 CUBIC FEET	(0.88 m³)
WEIGHT	35.0 lbs.	(16.8 kg)

*ASSUMES 6" (152 mm) ABOVE, BELOW, AND BETWEEN CHAMBERS

INSERTA TEE DETAIL

NTS

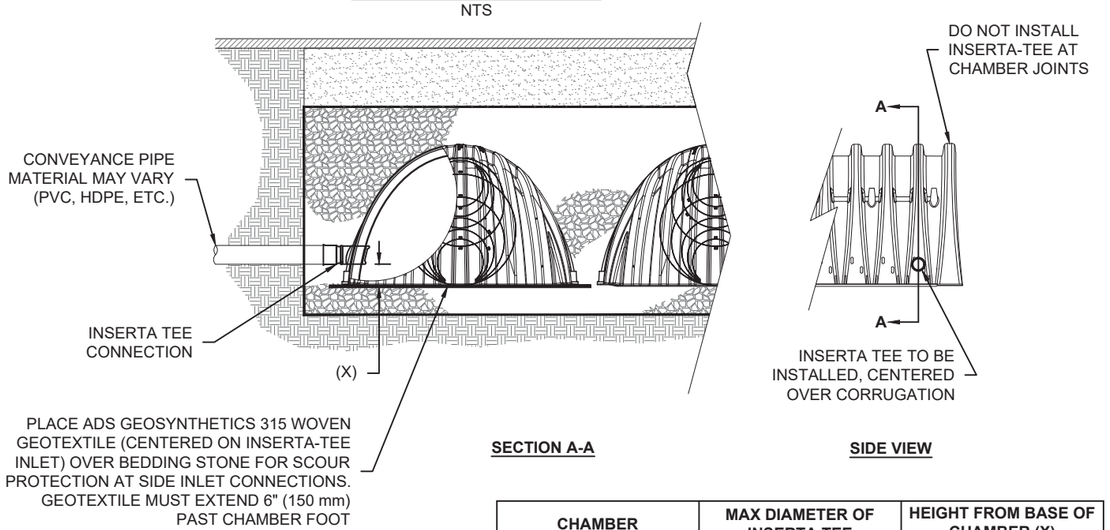

CHAMBER	MAX DIAMETER OF INSERTA TEE	HEIGHT FROM BASE OF CHAMBER (X)
SC-310	6" (150 mm)	4" (100 mm)
SC-740	10" (250 mm)	4" (100 mm)
DC-780	10" (250 mm)	4" (100 mm)
MC-3500	12" (300 mm)	6" (150 mm)
MC-4500	12" (300 mm)	8" (200 mm)
INSERTA TEE FITTINGS AVAILABLE FOR SDR 26, SDR 35, SCH 40 IPS GASKETED & SOLVENT WELD, N-12, HP STORM, C-900 OR DUCTILE IRON		

NOTE:
PART NUMBERS WILL VARY BASED ON INLET PIPE MATERIALS. CONTACT STORMTECH FOR MORE INFORMATION.

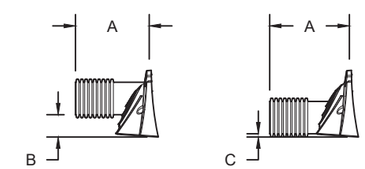

STUBS AT BOTTOM OF END CAP FOR PART NUMBERS ENDING WITH "B"
STUBS AT TOP OF END CAP FOR PART NUMBERS ENDING WITH "T"

PART #	STUB	A	B	C
SC310EPE06T / SC310EPE06TPC	6" (150 mm)	9.6" (244 mm)	5.8" (147 mm)	---
SC310EPE06B / SC310EPE06BPC			---	0.5" (13 mm)
SC310EPE08T / SC310EPE08TPC	8" (200 mm)	11.9" (302 mm)	3.5" (89 mm)	---
SC310EPE08B / SC310EPE08BPC			---	0.6" (15 mm)
SC310EPE10T / SC310EPE10TPC	10" (250 mm)	12.7" (323 mm)	1.4" (36 mm)	---
SC310EPE10B / SC310EPE10BPC			---	0.7" (18 mm)
SC310EPE12B	12" (300 mm)	13.5" (343 mm)	---	0.9" (23 mm)

ALL STUBS, EXCEPT FOR THE SC310EPE12B ARE PLACED AT BOTTOM OF END CAP SUCH THAT THE OUTSIDE DIAMETER OF THE STUB IS FLUSH WITH THE BOTTOM OF THE END CAP. FOR ADDITIONAL INFORMATION CONTACT STORMTECH AT 1-888-892-2694.

* FOR THE SC310EPE12B THE 12" (300 mm) STUB LIES BELOW THE BOTTOM OF THE END CAP APPROXIMATELY 0.25" (6 mm). BACKFILL MATERIAL SHOULD BE REMOVED FROM BELOW THE N-12 STUB SO THAT THE FITTING SITS LEVEL.

NOTE: ALL DIMENSIONS ARE NOMINAL

The Meadowlands (A-3)
Madison, WI

DATE: 01/29/2019 DRAWN: BA
PROJECT #: Tool CHECKED: ---

REV	DRW	CHK	DESCRIPTION

StormTech® Detention•Retention•Water Quality
70 INWOOD ROAD, SUITE 3 | ROCKY HILL | CT | 06067
860-529-8188 | 888-892-2694 | WWW.STORMTECH.COM

ADS® ADVANCED DRAINAGE SYSTEMS, INC.
4640 TRUEMAN BLVD
HILLIARD, OH 43026
1-800-733-7473

THIS DRAWING HAS BEEN PREPARED BASED ON INFORMATION PROVIDED TO ADS UNDER THE DIRECTION OF THE SITE DESIGN ENGINEER OR OTHER PROJECT REPRESENTATIVE. THE SITE DESIGN ENGINEER SHALL REVIEW THIS DRAWING PRIOR TO CONSTRUCTION. IT IS THE ULTIMATE RESPONSIBILITY OF THE SITE DESIGN ENGINEER TO ENSURE THAT THE PRODUCT(S) DEPICTED AND ALL ASSOCIATED DETAILS MEET ALL APPLICABLE LAWS, REGULATIONS, AND PROJECT REQUIREMENTS.

ADVANCED DRAINAGE SYSTEMS, INC.

SiteASSIST™ by StormTech

FOR STORMTECH INSTRUCTIONS, DOWNLOAD THE INSTALLATION APP

The Meadowlands (A-4)

Madison, WI

STORMTECH CHAMBER SPECIFICATIONS

1. CHAMBERS SHALL BE STORMTECH SC-740, SC-310, OR APPROVED EQUAL.
2. CHAMBERS SHALL BE MANUFACTURED FROM VIRGIN POLYPROPYLENE OR POLYETHYLENE RESINS.
3. CHAMBER ROWS SHALL PROVIDE CONTINUOUS, UNOBSTRUCTED INTERNAL SPACE WITH NO INTERNAL SUPPORT PANELS THAT WOULD IMPEDE FLOW OR LIMIT ACCESS FOR INSPECTION.
4. THE STRUCTURAL DESIGN OF THE CHAMBERS, THE STRUCTURAL BACKFILL, AND THE INSTALLATION REQUIREMENTS SHALL ENSURE THAT THE LOAD FACTORS SPECIFIED IN THE AASHTO LRFD BRIDGE DESIGN SPECIFICATIONS, SECTION 12.12, ARE MET FOR: 1) LONG-DURATION DEAD LOADS AND 2) SHORT-DURATION LIVE LOADS, BASED ON THE AASHTO DESIGN TRUCK WITH CONSIDERATION FOR IMPACT AND MULTIPLE VEHICLE PRESENCES.
5. CHAMBERS SHALL MEET ASTM F2922 (POLYETHYLENE) OR ASTM F2418 (POLYPROPYLENE), "STANDARD SPECIFICATION FOR THERMOPLASTIC CORRUGATED WALL STORMWATER COLLECTION CHAMBERS".
6. CHAMBERS SHALL BE DESIGNED AND ALLOWABLE LOADS DETERMINED IN ACCORDANCE WITH ASTM F2787, "STANDARD PRACTICE FOR STRUCTURAL DESIGN OF THERMOPLASTIC CORRUGATED WALL STORMWATER COLLECTION CHAMBERS".
7. ONLY CHAMBERS THAT ARE APPROVED BY THE SITE DESIGN ENGINEER WILL BE ALLOWED. THE CHAMBER MANUFACTURER SHALL SUBMIT THE FOLLOWING UPON REQUEST TO THE SITE DESIGN ENGINEER FOR APPROVAL BEFORE DELIVERING CHAMBERS TO THE PROJECT SITE:
   a. A STRUCTURAL EVALUATION SEALED BY A REGISTERED PROFESSIONAL ENGINEER THAT DEMONSTRATES THAT THE SAFETY FACTORS ARE GREATER THAN OR EQUAL TO 1.95 FOR DEAD LOAD AND 1.75 FOR LIVE LOAD, THE MINIMUM REQUIRED BY ASTM F2787 AND BY AASHTO FOR THERMOPLASTIC PIPE.
   b. A STRUCTURAL EVALUATION SEALED BY A REGISTERED PROFESSIONAL ENGINEER THAT DEMONSTRATES THAT THE LOAD FACTORS SPECIFIED IN THE AASHTO LRFD BRIDGE DESIGN SPECIFICATIONS, SECTION 12.12, ARE MET. THE 50 YEAR CREEP MODULUS DATA SPECIFIED IN ASTM F2418 OR ASTM F2922 MUST BE USED AS PART OF THE AASHTO STRUCTURAL EVALUATION TO VERIFY LONG-TERM PERFORMANCE.
   c. STRUCTURAL CROSS SECTION DETAIL ON WHICH THE STRUCTURAL EVALUATION IS BASED.
8. CHAMBERS AND END CAPS SHALL BE PRODUCED AT AN ISO 9001 CERTIFIED MANUFACTURING FACILITY.

IMPORTANT - NOTES FOR THE BIDDING AND INSTALLATION OF THE SC-310/SC-740 SYSTEM

1. STORMTECH SC-310 & SC-740 CHAMBERS SHALL NOT BE INSTALLED UNTIL THE MANUFACTURER'S REPRESENTATIVE HAS COMPLETED A PRE-CONSTRUCTION MEETING WITH THE INSTALLERS.
2. STORMTECH SC-310 & SC-740 CHAMBERS SHALL BE INSTALLED IN ACCORDANCE WITH THE "STORMTECH SC-310/SC-740/SC-780 CONSTRUCTION GUIDE".
3. CHAMBERS ARE NOT TO BE BACKFILLED WITH A DOZER OR AN EXCAVATOR SITUATED OVER THE CHAMBERS.

   STORMTECH RECOMMENDS 3 BACKFILL METHODS:
   - STONESHOOTER LOCATED OFF THE CHAMBER BED.
   - BACKFILL AS ROWS ARE BUILT USING AN EXCAVATOR ON THE FOUNDATION STONE OR SUBGRADE.
   - BACKFILL FROM OUTSIDE THE EXCAVATION USING A LONG BOOM HOE OR EXCAVATOR.
4. THE FOUNDATION STONE SHALL BE LEVELED AND COMPACTED PRIOR TO PLACING CHAMBERS.
5. JOINTS BETWEEN CHAMBERS SHALL BE PROPERLY SEATED PRIOR TO PLACING STONE.
6. MAINTAIN MINIMUM - 6" (150 mm) SPACING BETWEEN THE CHAMBER ROWS.
7. EMBEDMENT STONE SURROUNDING CHAMBERS MUST BE A CLEAN, CRUSHED, ANGULAR STONE 3/4-2" (20-50 mm).
8. THE CONTRACTOR MUST REPORT ANY DISCREPANCIES WITH CHAMBER FOUNDATION MATERIALS BEARING CAPACITIES TO THE SITE DESIGN ENGINEER.
9. ADS RECOMMENDS THE USE OF "FLEXSTORM CATCH IT" INSERTS DURING CONSTRUCTION FOR ALL INLETS TO PROTECT THE SUBSURFACE STORMWATER MANAGEMENT SYSTEM FROM CONSTRUCTION SITE RUNOFF.

NOTES FOR CONSTRUCTION EQUIPMENT

1. STORMTECH SC-310 & SC-740 CHAMBERS SHALL BE INSTALLED IN ACCORDANCE WITH THE "STORMTECH SC-310/SC-740/DC-780 CONSTRUCTION GUIDE".
2. THE USE OF CONSTRUCTION EQUIPMENT OVER SC-310 & SC-740 CHAMBERS IS LIMITED:
   - NO EQUIPMENT IS ALLOWED ON BARE CHAMBERS.
   - NO RUBBER TIRED LOADERS, DUMP TRUCKS, OR EXCAVATORS ARE ALLOWED UNTIL PROPER FILL DEPTHS ARE REACHED IN ACCORDANCE WITH THE "STORMTECH SC-310/SC-740/DC-780 CONSTRUCTION GUIDE".
   - WEIGHT LIMITS FOR CONSTRUCTION EQUIPMENT CAN BE FOUND IN THE "STORMTECH SC-310/SC-740/DC-780 CONSTRUCTION GUIDE".
3. FULL 36" (900 mm) OF STABILIZED COVER MATERIALS OVER THE CHAMBERS IS REQUIRED FOR DUMP TRUCK TRAVEL OR DUMPING.

USE OF A DOZER TO PUSH EMBEDMENT STONE BETWEEN THE ROWS OF CHAMBERS MAY CAUSE DAMAGE TO THE CHAMBERS AND IS NOT AN ACCEPTABLE BACKFILL METHOD. ANY CHAMBERS DAMAGED BY THE "DUMP AND PUSH" METHOD ARE NOT COVERED UNDER THE STORMTECH STANDARD WARRANTY.

CONTACT STORMTECH AT 1-888-892-2694 WITH ANY QUESTIONS ON INSTALLATION REQUIREMENTS OR WEIGHT LIMITS FOR CONSTRUCTION EQUIPMENT.

©2015 ADS, INC.

CONCEPTUAL LAYOUT

(55) STORMTECH SC-310 CHAMBERS
(10) STORMTECH SC-310 END CAPS
INSTALLED WITH 6 " COVER STONE, 24 " BASE STONE, 40% STONE VOID
INSTALLED SYSTEM VOLUME: 2962 CF
AREA OF SYSTEM: 1614 **FT²**
PERIMETER OF SYSTEM: 215 **FT**

COMPUTER GENERATED CONCEPTUAL LAYOUT - NOT FOR CONSTRUCTION

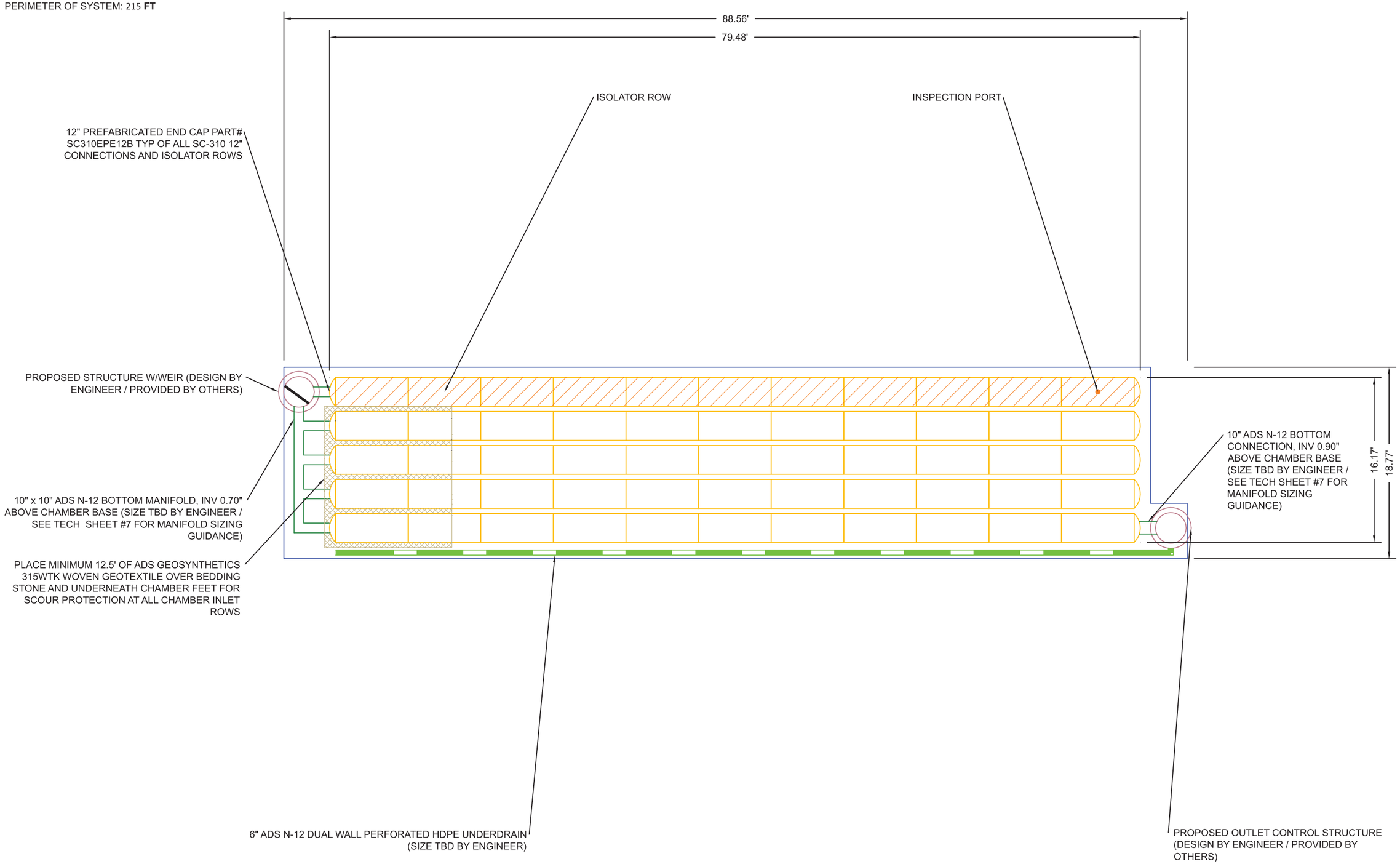

The Meadowlands (A-4)
Madison, WI

DATE: 01/29/2019 | DRAWN: BA
PROJECT #: Tool | CHECKED: ---

REV	DRW	CHK	DESCRIPTION

StormTech®
Detention- Retention- Water Quality
70 INWOOD ROAD, SUITE 3 | ROCKY HILL | CT | 06067
860-529-8188 |888-892-2694 | WWW.STORMTECH.COM

ADS.
ADVANCED DRAINAGE SYSTEMS, INC.
4640 TRUEMAN BLVD
HILLIARD, OH 43026
1-800-733-7473

NOT TO SCALE

THIS DRAWING HAS BEEN PREPARED BASED ON INFORMATION PROVIDED TO ADS UNDER THE DIRECTION OF THE SITE DESIGN ENGINEER OR OTHER PROJECT REPRESENTATIVE. THE SITE DESIGN ENGINEER SHALL REVIEW THIS DRAWING PRIOR TO CONSTRUCTION. IT IS THE ULTIMATE RESPONSIBILITY OF THE SITE DESIGN ENGINEER TO ENSURE THAT THE PRODUCT(S) DEPICTED AND ALL ASSOCIATED DETAILS MEET ALL APPLICABLE LAWS, REGULATIONS, AND PROJECT REQUIREMENTS.

ACCEPTABLE FILL MATERIALS: STORMTECH SC-310 CHAMBER SYSTEMS

MATERIAL LOCATION		DESCRIPTION	AASHTO MATERIAL CLASSIFICATIONS	COMPACTION / DENSITY REQUIREMENT
D	**FINAL FILL:** FILL MATERIAL FOR LAYER 'D' STARTS FROM THE TOP OF THE 'C' LAYER TO THE BOTTOM OF FLEXIBLE PAVEMENT OR UNPAVED FINISHED GRADE ABOVE. NOTE THAT PAVEMENT SUBBASE MAY BE PART OF THE 'D' LAYER	ANY SOIL/ROCK MATERIALS, NATIVE SOILS, OR PER ENGINEER'S PLANS. CHECK PLANS FOR PAVEMENT SUBGRADE REQUIREMENTS.	N/A	PREPARE PER SITE DESIGN ENGINEER'S PLANS. PAVED INSTALLATIONS MAY HAVE STRINGENT MATERIAL AND PREPARATION REQUIREMENTS.
C	**INITIAL FILL:** FILL MATERIAL FOR LAYER 'C' STARTS FROM THE TOP OF THE EMBEDMENT STONE ('B' LAYER) TO 18" (450 mm) ABOVE THE TOP OF THE CHAMBER. NOTE THAT PAVEMENT SUBBASE MAY BE A PART OF THE 'C' LAYER.	GRANULAR WELL-GRADED SOIL/AGGREGATE MIXTURES, <35% FINES OR PROCESSED AGGREGATE. MOST PAVEMENT SUBBASE MATERIALS CAN BE USED IN LIEU OF THIS LAYER.	AASHTO M145[1] A-1, A-2-4, A-3 OR AASHTO M43[1] 3, 357, 4, 467, 5, 56, 57, 6, 67, 68, 7, 78, 8, 89, 9, 10	BEGIN COMPACTIONS AFTER 12" (300 mm) OF MATERIAL OVER THE CHAMBERS IS REACHED. COMPACT ADDITIONAL LAYERS IN 6" (150 mm) MAX LIFTS TO A MIN. 95% PROCTOR DENSITY FOR WELL GRADED MATERIAL AND 95% RELATIVE DENSITY FOR PROCESSED AGGREGATE MATERIALS. ROLLER GROSS VEHICLE WEIGHT NOT TO EXCEED 12,000 lbs (53 kN). DYNAMIC FORCE NOT TO EXCEED 20,000 lbs (89 kN).
B	**EMBEDMENT STONE:** FILL SURROUNDING THE CHAMBERS FROM THE FOUNDATION STONE ('A' LAYER) TO THE 'C' LAYER ABOVE.	CLEAN, CRUSHED, ANGULAR STONE, NOMINAL SIZE DISTRIBUTION BETWEEN 3/4-2 INCH (20-50 mm)	AASHTO M43[1] 3, 357, 4, 467, 5, 56, 57	NO COMPACTION REQUIRED.
A	**FOUNDATION STONE:** FILL BELOW CHAMBERS FROM THE SUBGRADE UP TO THE FOOT (BOTTOM) OF THE CHAMBER.	CLEAN, CRUSHED, ANGULAR STONE, NOMINAL SIZE DISTRIBUTION BETWEEN 3/4-2 INCH (20-50 mm)	AASHTO M43[1] 3, 357, 4, 467, 5, 56, 57	PLATE COMPACT OR ROLL TO ACHIEVE A FLAT SURFACE. [2 3]

PLEASE NOTE:
1. THE LISTED AASHTO DESIGNATIONS ARE FOR GRADATIONS ONLY. THE STONE MUST ALSO BE CLEAN, CRUSHED, ANGULAR. FOR EXAMPLE, A SPECIFICATION FOR #4 STONE WOULD STATE: "CLEAN, CRUSHED, ANGULAR NO. 4 (AASHTO M43) STONE".
2. STORMTECH COMPACTION REQUIREMENTS ARE MET FOR 'A' LOCATION MATERIALS WHEN PLACED AND COMPACTED IN 6" (150 mm) (MAX) LIFTS USING TWO FULL COVERAGES WITH A VIBRATORY COMPACTOR.
3. WHERE INFILTRATION SURFACES MAY BE COMPROMISED BY COMPACTION, FOR STANDARD DESIGN LOAD CONDITIONS, A FLAT SURFACE MAY BE ACHIEVED BY RAKING OR DRAGGING WITHOUT COMPACTION EQUIPMENT. FOR SPECIAL LOAD DESIGNS, CONTACT STORMTECH FOR COMPACTION REQUIREMENTS.

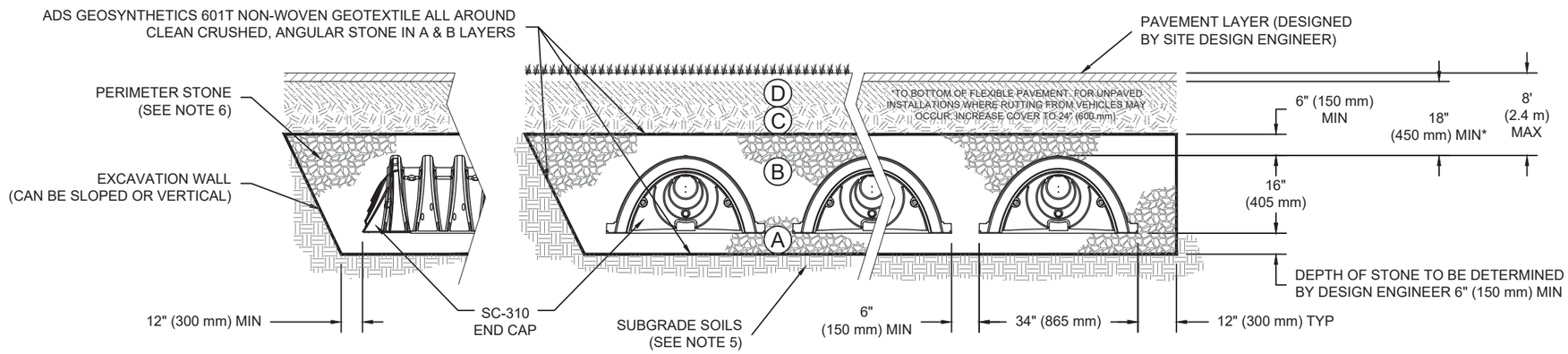

NOTES:

1. SC-310 CHAMBERS SHALL CONFORM TO THE REQUIREMENTS OF ASTM F2418 "STANDARD SPECIFICATION FOR POLYPROPYLENE (PP) CORRUGATED WALL STORMWATER COLLECTION CHAMBERS", OR ASTM F2922 "STANDARD SPECIFICATION FOR POLYETHYLENE (PE) CORRUGATED WALL STORMWATER COLLECTION CHAMBERS".
2. SC-310 CHAMBERS SHALL BE DESIGNED IN ACCORDANCE WITH ASTM F2787 "STANDARD PRACTICE FOR STRUCTURAL DESIGN OF THERMOPLASTIC CORRUGATED WALL STORMWATER COLLECTION CHAMBERS".
3. "ACCEPTABLE FILL MATERIALS" TABLE ABOVE PROVIDES MATERIAL LOCATIONS, DESCRIPTIONS, GRADATIONS, AND COMPACTION REQUIREMENTS FOR FOUNDATION, EMBEDMENT, AND FILL MATERIALS.
4. THE "SITE DESIGN ENGINEER" REFERS TO THE ENGINEER RESPONSIBLE FOR THE DESIGN AND LAYOUT OF THE STORMTECH CHAMBERS FOR THIS PROJECT.
5. THE SITE DESIGN ENGINEER IS RESPONSIBLE FOR ASSESSING THE BEARING RESISTANCE (ALLOWABLE BEARING CAPACITY) OF THE SUBGRADE SOILS AND THE DEPTH OF FOUNDATION STONE WITH CONSIDERATION FOR THE RANGE OF EXPECTED SOIL MOISTURE CONDITIONS.
6. PERIMETER STONE MUST BE EXTENDED HORIZONTALLY TO THE EXCAVATION WALL FOR BOTH VERTICAL AND SLOPED EXCAVATION WALLS.
7. ONCE LAYER 'C' IS PLACED, ANY SOIL/MATERIAL CAN BE PLACED IN LAYER 'D' UP TO THE FINISHED GRADE. MOST PAVEMENT SUBBASE SOILS CAN BE USED TO REPLACE THE MATERIAL REQUIREMENTS OF LAYER 'C' OR 'D' AT THE SITE DESIGN ENGINEER'S DISCRETION.

The Meadowlands (A-4)
Madison, WI

DATE: 01/29/2019 DRAWN: BA
PROJECT #: Tool CHECKED: ---

REV	DRW	CHK	DESCRIPTION

StormTech® Detention•Retention•Water Quality
70 INWOOD ROAD, SUITE 3 | ROCKY HILL | CT | 06067
860-529-8188 | 888-892-2694 | WWW.STORMTECH.COM

ADS® ADVANCED DRAINAGE SYSTEMS, INC.
4640 TRUEMAN BLVD
HILLIARD, OH 43026
1-800-733-7473

THIS DRAWING HAS BEEN PREPARED BASED ON INFORMATION PROVIDED TO ADS UNDER THE DIRECTION OF THE SITE DESIGN ENGINEER OR OTHER PROJECT REPRESENTATIVE. THE SITE DESIGN ENGINEER SHALL REVIEW THIS DRAWING PRIOR TO CONSTRUCTION. IT IS THE ULTIMATE RESPONSIBILITY OF THE SITE DESIGN ENGINEER TO ENSURE THAT THE PRODUCT(S) DEPICTED AND ALL ASSOCIATED DETAILS MEET ALL APPLICABLE LAWS, REGULATIONS, AND PROJECT REQUIREMENTS.

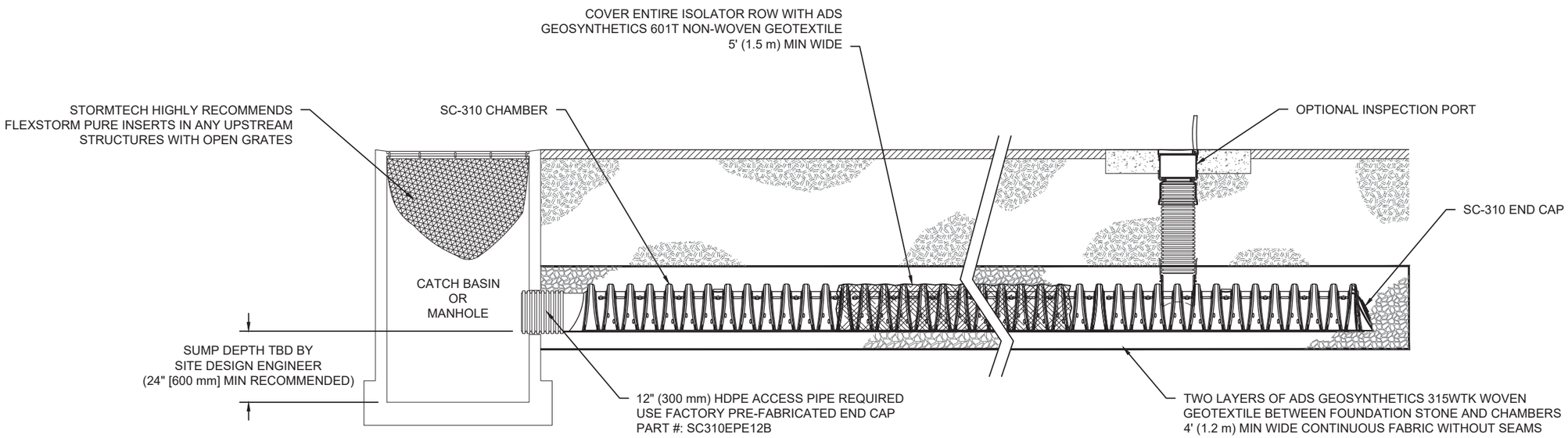

SC-310 ISOLATOR ROW DETAIL

NTS

INSPECTION & MAINTENANCE

STEP 1) INSPECT ISOLATOR ROW FOR SEDIMENT
- A. INSPECTION PORTS (IF PRESENT)
  - A.1. REMOVE/OPEN LID ON NYLOPLAST INLINE DRAIN
  - A.2. REMOVE AND CLEAN FLEXSTORM FILTER IF INSTALLED
  - A.3. USING A FLASHLIGHT AND STADIA ROD, MEASURE DEPTH OF SEDIMENT AND RECORD ON MAINTENANCE LOG
  - A.4. LOWER A CAMERA INTO ISOLATOR ROW FOR VISUAL INSPECTION OF SEDIMENT LEVELS (OPTIONAL)
  - A.5. IF SEDIMENT IS AT, OR ABOVE, 3" (80 mm) PROCEED TO STEP 2. IF NOT, PROCEED TO STEP 3.
- B. ALL ISOLATOR ROWS
  - B.1. REMOVE COVER FROM STRUCTURE AT UPSTREAM END OF ISOLATOR ROW
  - B.2. USING A FLASHLIGHT, INSPECT DOWN THE ISOLATOR ROW THROUGH OUTLET PIPE
    - i) MIRRORS ON POLES OR CAMERAS MAY BE USED TO AVOID A CONFINED SPACE ENTRY
    - ii) FOLLOW OSHA REGULATIONS FOR CONFINED SPACE ENTRY IF ENTERING MANHOLE
  - B.3. IF SEDIMENT IS AT, OR ABOVE, 3" (80 mm) PROCEED TO STEP 2. IF NOT, PROCEED TO STEP 3.

STEP 2) CLEAN OUT ISOLATOR ROW USING THE JETVAC PROCESS
- A. A FIXED CULVERT CLEANING NOZZLE WITH REAR FACING SPREAD OF 45" (1.1 m) OR MORE IS PREFERRED
- B. APPLY MULTIPLE PASSES OF JETVAC UNTIL BACKFLUSH WATER IS CLEAN
- C. VACUUM STRUCTURE SUMP AS REQUIRED

STEP 3) REPLACE ALL COVERS, GRATES, FILTERS, AND LIDS; RECORD OBSERVATIONS AND ACTIONS.

STEP 4) INSPECT AND CLEAN BASINS AND MANHOLES UPSTREAM OF THE STORMTECH SYSTEM.

NOTES

1. INSPECT EVERY 6 MONTHS DURING THE FIRST YEAR OF OPERATION. ADJUST THE INSPECTION INTERVAL BASED ON PREVIOUS OBSERVATIONS OF SEDIMENT ACCUMULATION AND HIGH WATER ELEVATIONS.
2. CONDUCT JETTING AND VACTORING ANNUALLY OR WHEN INSPECTION SHOWS THAT MAINTENANCE IS NECESSARY.

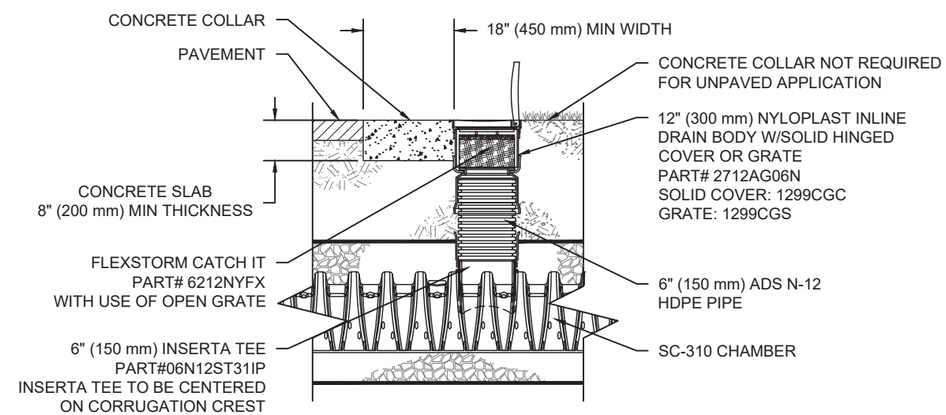

SC-310 6" INSPECTION PORT DETAIL

NTS

The Meadowlands (A-4)
Madison, WI

DATE: 01/29/2019 DRAWN: BA
PROJECT #: Tool CHECKED: ---

REV	DRW	CHK	DESCRIPTION

StormTech®
Detention•Retention•Water Quality
70 INWOOD ROAD, SUITE 3 | ROCKY HILL | CT | 06067
860-529-8188 | 888-892-2694 | WWW.STORMTECH.COM

ADS®
ADVANCED DRAINAGE SYSTEMS, INC.
4640 TRUEMAN BLVD
HILLIARD, OH 43026
1-800-733-7473

THIS DRAWING HAS BEEN PREPARED BASED ON INFORMATION PROVIDED TO ADS UNDER THE DIRECTION OF THE SITE DESIGN ENGINEER OR OTHER PROJECT REPRESENTATIVE. THE SITE DESIGN ENGINEER SHALL REVIEW THIS DRAWING PRIOR TO CONSTRUCTION. IT IS THE ULTIMATE RESPONSIBILITY OF THE SITE DESIGN ENGINEER TO ENSURE THAT THE PRODUCT(S) DEPICTED AND ALL ASSOCIATED DETAILS MEET ALL APPLICABLE LAWS, REGULATIONS, AND PROJECT REQUIREMENTS.

UNDERDRAIN DETAIL

NTS

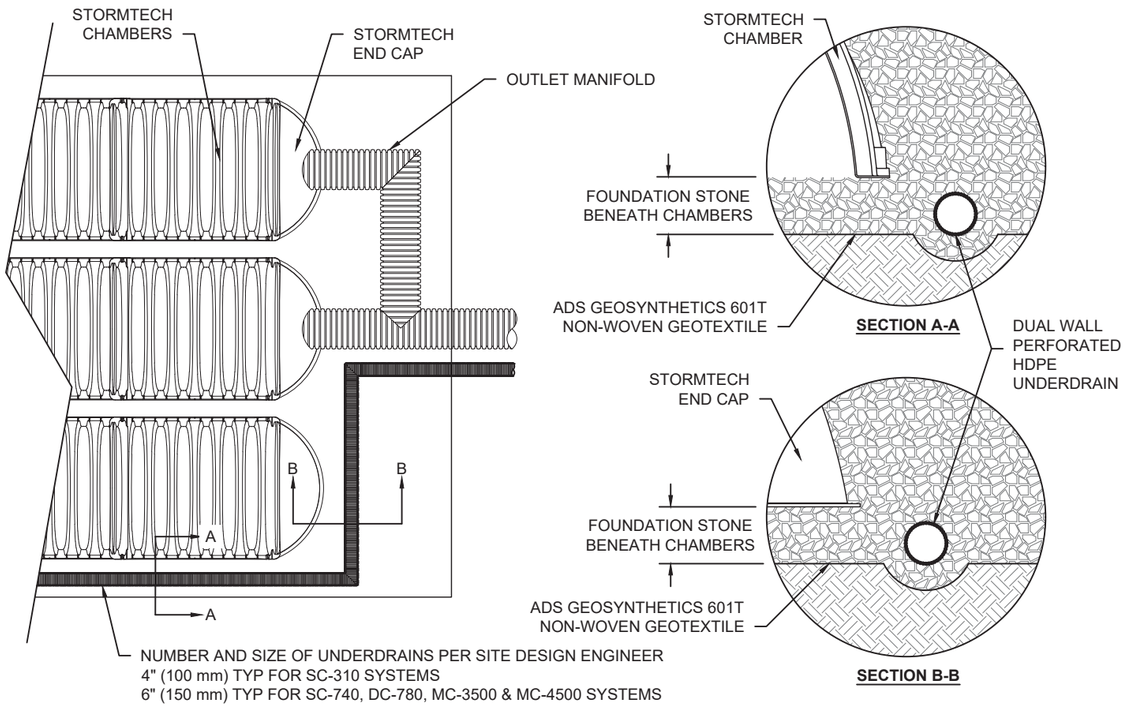

SC-310 TECHNICAL SPECIFICATION

NTS

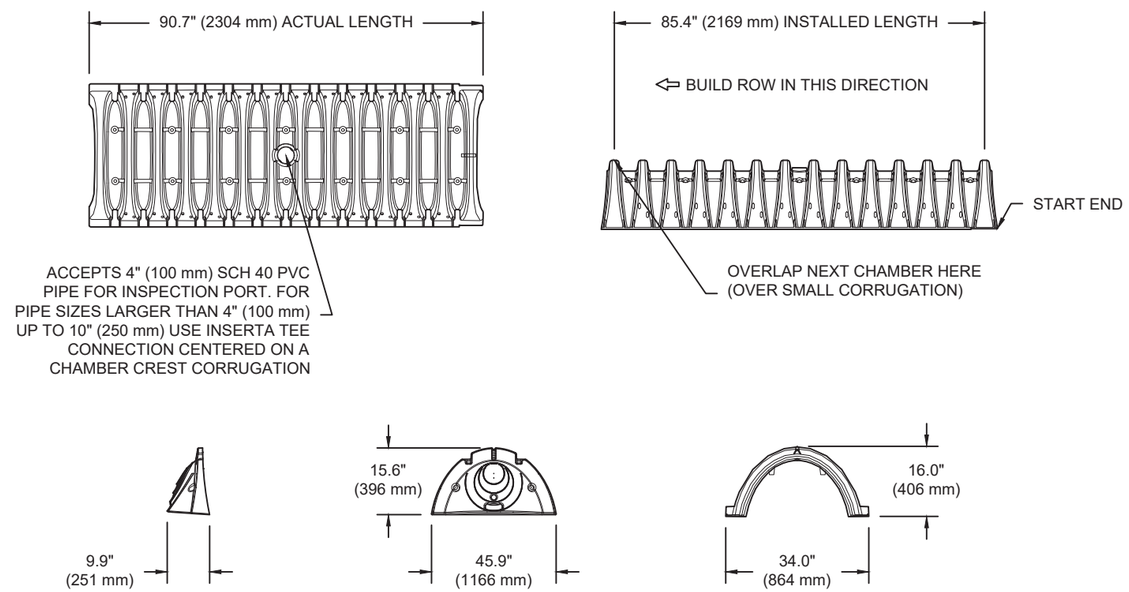

NOMINAL CHAMBER SPECIFICATIONS

SIZE (W X H X INSTALLED LENGTH)	34.0" X 16.0" X 85.4"	(864 mm X 406 mm X 2169 mm)
CHAMBER STORAGE	14.7 CUBIC FEET	(0.42 m³)
MINIMUM INSTALLED STORAGE*	31.0 CUBIC FEET	(0.88 m³)
WEIGHT	35.0 lbs.	(16.8 kg)

*ASSUMES 6" (152 mm) ABOVE, BELOW, AND BETWEEN CHAMBERS

INSERTA TEE DETAIL

NTS

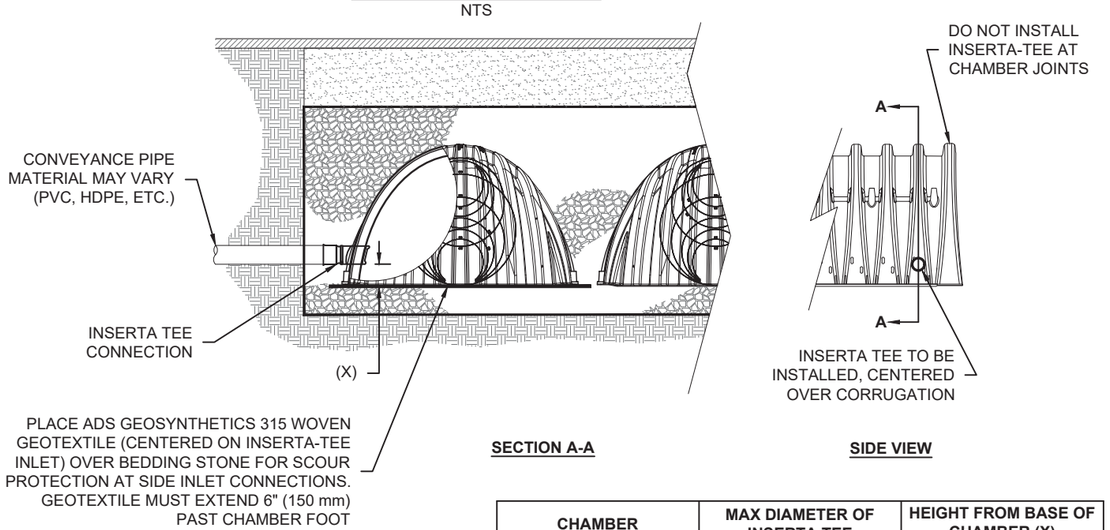

CHAMBER	MAX DIAMETER OF INSERTA TEE	HEIGHT FROM BASE OF CHAMBER (X)
SC-310	6" (150 mm)	4" (100 mm)
SC-740	10" (250 mm)	4" (100 mm)
DC-780	10" (250 mm)	4" (100 mm)
MC-3500	12" (300 mm)	6" (150 mm)
MC-4500	12" (300 mm)	8" (200 mm)
INSERTA TEE FITTINGS AVAILABLE FOR SDR 26, SDR 35, SCH 40 IPS GASKETED & SOLVENT WELD, N-12, HP STORM, C-900 OR DUCTILE IRON		

NOTE:
PART NUMBERS WILL VARY BASED ON INLET PIPE MATERIALS. CONTACT STORMTECH FOR MORE INFORMATION.

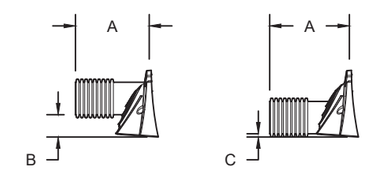

STUBS AT BOTTOM OF END CAP FOR PART NUMBERS ENDING WITH "B"
STUBS AT TOP OF END CAP FOR PART NUMBERS ENDING WITH "T"

PART #	STUB	A	B	C
SC310EPE06T / SC310EPE06TPC	6" (150 mm)	9.6" (244 mm)	5.8" (147 mm)	---
SC310EPE06B / SC310EPE06BPC			---	0.5" (13 mm)
SC310EPE08T / SC310EPE08TPC	8" (200 mm)	11.9" (302 mm)	3.5" (89 mm)	---
SC310EPE08B / SC310EPE08BPC			---	0.6" (15 mm)
SC310EPE10T / SC310EPE10TPC	10" (250 mm)	12.7" (323 mm)	1.4" (36 mm)	---
SC310EPE10B / SC310EPE10BPC			---	0.7" (18 mm)
SC310EPE12B	12" (300 mm)	13.5" (343 mm)	---	0.9" (23 mm)

ALL STUBS, EXCEPT FOR THE SC310EPE12B ARE PLACED AT BOTTOM OF END CAP SUCH THAT THE OUTSIDE DIAMETER OF THE STUB IS FLUSH WITH THE BOTTOM OF THE END CAP. FOR ADDITIONAL INFORMATION CONTACT STORMTECH AT 1-888-892-2694.

* FOR THE SC310EPE12B THE 12" (300 mm) STUB LIES BELOW THE BOTTOM OF THE END CAP APPROXIMATELY 0.25" (6 mm). BACKFILL MATERIAL SHOULD BE REMOVED FROM BELOW THE N-12 STUB SO THAT THE FITTING SITS LEVEL.

NOTE: ALL DIMENSIONS ARE NOMINAL

The Meadowlands (A-4)
Madison, WI

DATE: 01/29/2019 DRAWN: BA
PROJECT #: Tool CHECKED: ---

REV	DRW	CHK	DESCRIPTION

StormTech® Detention•Retention•Water Quality
70 INWOOD ROAD, SUITE 3 | ROCKY HILL | CT | 06067
860-529-8188 | 888-892-2694 | WWW.STORMTECH.COM

ADS® ADVANCED DRAINAGE SYSTEMS, INC.
4640 TRUEMAN BLVD
HILLIARD, OH 43026
1-800-733-7473

THIS DRAWING HAS BEEN PREPARED BASED ON INFORMATION PROVIDED TO ADS UNDER THE DIRECTION OF THE SITE DESIGN ENGINEER OR OTHER PROJECT REPRESENTATIVE. THE SITE DESIGN ENGINEER SHALL REVIEW THIS DRAWING PRIOR TO CONSTRUCTION. IT IS THE ULTIMATE RESPONSIBILITY OF THE SITE DESIGN ENGINEER TO ENSURE THAT THE PRODUCT(S) DEPICTED AND ALL ASSOCIATED DETAILS MEET ALL APPLICABLE LAWS, REGULATIONS, AND PROJECT REQUIREMENTS.

GENERAL NOTES

1. DRAWINGS ARE INTENDED TO BE PRINTED ON 22" X 34" PAPER. PRINTING THESE DRAWINGS AT A DIFFERENT SIZE WILL IMPACT THE SCALE. VERIFY THE GRAPHIC SCALE BEFORE REFERENCING ANY MEASUREMENTS ON THESE SHEETS. THE RECIPIENT OF THESE DRAWINGS SHALL BE RESPONSIBLE FOR ANY ERRORS RESULTING FROM INCORRECT PRINTING, COPYING, OR ANY OTHER CHANGES THAT ALTER THE SCALE OF THE DRAWINGS.
2. VERIFY ALL PLAN DIMENSIONS PRIOR TO START OF CONSTRUCTION. NOTIFY THE OWNER'S REPRESENTATIVE TO ADDRESS ANY QUESTIONS OR CLARIFY ANY DISCREPANCIES.
3. WRITTEN DIMENSIONS TAKE PRECEDENCE OVER SCALED DIMENSIONS.
4. GEOTECHNICAL SOILS REPORT RECOMMENDATIONS SHALL BE FOLLOWED DURING CONSTRUCTION. THE CONTRACTOR SHALL USE THESE CONTRACT DOCUMENTS AS A BASIS FOR THE BID.
5. CONTRACTOR SHALL CONFIRM THAT SITE CONDITIONS ARE SIMILAR TO THE PLANS, WITHIN TOLERANCES STATED IN THE CONTRACT DOCUMENTS, AND SATISFACTORY TO THE CONTRACTOR PRIOR TO START OF WORK. SHOULD SITE CONDITIONS BE DIFFERENT THAN REPRESENTED ON THE PLANS OR UNSATISFACTORY TO THE CONTRACTOR, THE CONTRACTOR SHALL CONTACT THE OWNER'S REPRESENTATIVE FOR CLARIFICATION AND FURTHER DIRECTION.
6. THE CONTRACTOR IS RESPONSIBLE TO PAY FOR, AND OBTAIN, ANY REQUIRED APPLICATIONS, PERMITTING, LICENSES, INSPECTIONS AND METERS ASSOCIATED WITH WORK.
7. THE CONTRACTOR SHALL BE RESPONSIBLE FOR ANY FINES OR PENALTIES ASSESSED TO THE OWNER RELATING TO ANY VIOLATIONS OR NON-CONFORMANCE WITH THE PLANS, SPECIFICATIONS, CONTRACT DOCUMENTS, JURISDICTIONAL CODES, AND REGULATORY AGENCIES.
8. THE CONTRACTOR SHALL BE RESPONSIBLE FOR COORDINATION OF ALL UTILITY LOCATES PRIOR TO ANY EXCAVATION. REFER TO ENGINEERING UTILITY PLANS FOR ALL PROPOSED UTILITY LOCATIONS AND DETAILS. NOTIFY OWNER'S REPRESENTATIVE IF EXISTING OR PROPOSED UTILITIES INTERFERE WITH THE ABILITY TO PERFORM WORK.
9. UNLESS IDENTIFIED ON THE PLANS FOR DEMOLITION OR REMOVAL, THE CONTRACTOR IS RESPONSIBLE FOR THE COST TO REPAIR UTILITIES, ADJACENT OR EXISTING LANDSCAPE, ADJACENT OR EXISTING PAVING, OR ANY PUBLIC AND PRIVATE PROPERTY THAT IS DAMAGED BY THE CONTRACTOR OR THEIR SUBCONTRACTOR'S OPERATIONS DURING INSTALLATION, ESTABLISHMENT OR DURING THE SPECIFIED MAINTENANCE PERIOD. ALL DAMAGES SHALL BE REPAIRED TO PRE-CONSTRUCTION CONDITIONS AS DETERMINED BY THE OWNER'S REPRESENTATIVE. CONTRACTOR SHALL BE RESPONSIBLE FOR LOGGING ANY DAMAGES PRIOR TO START OF CONSTRUCTION AND DURING THE CONTRACT PERIOD.
10. ALL WORK SHALL BE CONFINED TO THE AREA WITHIN THE CONSTRUCTION LIMITS AS SHOWN ON THE PLANS. ANY AREAS OR IMPROVEMENTS DISTURBED OUTSIDE THESE LIMITS SHALL BE RETURNED TO THEIR ORIGINAL CONDITION AT THE CONTRACTOR'S EXPENSE. IN THE EVENT THE CONTRACTOR REQUIRES A MODIFICATION TO THE CONSTRUCTION LIMITS, WRITTEN PERMISSION MUST BE OBTAINED FROM THE OWNER'S REPRESENTATIVE PRIOR TO ANY DISTURBANCE OUTSIDE OF THE LIMITS OF WORK.
11. THE CONTRACTOR SHALL BE RESPONSIBLE FOR THE REPAIR OF ANY OF THEIR TRENCHES OR EXCAVATIONS THAT SETTLE.
12. THE CONTRACTOR SHALL BE RESPONSIBLE TO PREPARE AND SUBMIT A TRAFFIC CONTROL PLAN TO THE APPROPRIATE JURISDICTIONAL AGENCIES AND THE OWNER'S REPRESENTATIVE IF THEIR WORK AND OPERATIONS AFFECT OR IMPACT THE PUBLIC RIGHTS-OF-WAY. OBTAIN APPROVAL PRIOR TO ANY WORK WHICH AFFECTS OR IMPACTS THE PUBLIC RIGHTS-OF-WAY. THE CONTRACTOR SHALL BE RESPONSIBLE FOR ANY FINES OR PENALTIES ASSESSED TO THE OWNER RELATING TO THIS REQUIREMENT DURING THE CONTRACT PERIOD.
13. SIGHT TRIANGLES AND SIGHT LINES SHALL REMAIN UNOBSTRUCTED BY EQUIPMENT, CONSTRUCTION MATERIALS, PLANT MATERIAL OR ANY OTHER VISUAL OBSTACLE DURING THE CONTRACT PERIOD AND AT MATURITY OF PLANTS PER LOCAL JURISDICTIONAL REQUIREMENTS.
14. NO PLANT MATERIAL OTHER THAN GROUND COVER IS ALLOWED TO BE PLANTED ADJACENT TO FIRE HYDRANTS AS STIPULATED BY JURISDICTIONAL REQUIREMENTS.
15. COORDINATE SITE ACCESS, STAGING, STORAGE AND CLEANOUT AREAS WITH OWNER'S REPRESENTATIVE.
16. CONTRACTOR IS RESPONSIBLE FOR PROVIDING TEMPORARY SAFETY FENCING AND BARRIERS AROUND ALL IMPROVEMENTS SUCH AS WALLS, PLAY STRUCTURES, EXCAVATIONS, ETC. ASSOCIATED WITH THEIR WORK UNTIL SUCH FACILITIES ARE COMPLETELY INSTALLED PER THE PLANS, SPECIFICATIONS AND MANUFACTURER'S RECOMMENDATIONS.
17. CONTRACTOR SHALL BE RESPONSIBLE FOR PROTECTION OF THEIR MATERIAL STOCK PILES AND WORK FROM VANDALISM, EROSION OR UNINTENDED DISTURBANCE DURING THE CONSTRUCTION PERIOD AND UNTIL FINAL ACCEPTANCE IS ISSUED.
18. THE CONTRACTOR SHALL KNOW, UNDERSTAND AND ABIDE BY ANY STORM WATER POLLUTION PREVENTION PLAN (SWPPP) ASSOCIATED WITH THE SITE. IF A STORM WATER POLLUTION PREVENTION PLAN IS NOT PROVIDED BY THE OWNER'S REPRESENTATIVE, REQUEST A COPY BEFORE PERFORMANCE OF ANY SITE WORK.
19. MAINTAIN ANY STORM WATER MANAGEMENT FACILITIES THAT EXIST ON SITE FOR FULL FUNCTIONALITY. THE CONTRACTOR SHALL INSTALL AND MAINTAIN ANY NEW STORM WATER MANAGEMENT FACILITIES THAT ARE IDENTIFIED IN THE SCOPE OF WORK TO FULL FUNCTIONALITY. THE CONTRACTOR SHALL BE RESPONSIBLE FOR ANY FINES OR PENALTIES ASSESSED TO THE OWNER FOR FAILURE TO MAINTAIN STORM WATER MANAGEMENT FACILITIES DURING THE CONTRACT PERIOD.
20. THE CONTRACTOR SHALL PREVENT SEDIMENT, DEBRIS AND ALL OTHER POLLUTANTS FROM EXITING THE SITE OR ENTERING THE STORM SEWER SYSTEM DURING ALL DEMOLITION OR CONSTRUCTION OPERATIONS THAT ARE PART OF THE LANDSCAPE INSTALLATION. THE CONTRACTOR SHALL BE RESPONSIBLE FOR ANY FINES OR PENALTIES ASSESSED TO THE OWNER RELATING TO THESE REQUIREMENTS DURING THEIR CONTRACTED COURSE OF WORK.
21. THE CONTRACTOR SHALL BE RESPONSIBLE TO PREVENT ANY IMPACTS TO ADJACENT WATERWAYS, WETLANDS, OR OTHER ENVIRONMENTALLY SENSITIVE AREAS RESULTING FROM WORK DONE AS PART OF THIS PROJECT. THE CONTRACTOR SHALL BE RESPONSIBLE FOR ANY FINES OR PENALTIES ASSESSED TO THE OWNER RELATING TO THESE STANDARDS DURING THEIR CONTRACTED COURSE OF WORK.

GENERAL NOTES CONTINUED

22. THE CONTRACTOR AND/OR THEIR AUTHORIZED AGENTS SHALL ENSURE THAT ALL LOADS OF CONSTRUCTION MATERIAL IMPORTED TO OR EXPORTED FROM THE PROJECT SITE SHALL BE PROPERLY COVERED TO PREVENT LOSS OF MATERIAL DURING TRANSPORT. TRANSPORTATION METHODS ON PUBLIC RIGHT-OF WAYS SHALL CONFORM TO JURISDICTIONAL REQUIREMENTS. THE CONTRACTOR SHALL BE RESPONSIBLE FOR ANY FINES OR PENALTIES ASSESSED TO THE OWNER RELATING TO THESE REQUIREMENTS.
23. THE CLEANING OF EQUIPMENT IS PROHIBITED AT THE JOB SITE UNLESS AUTHORIZED BY THE OWNER'S REPRESENTATIVE IN A DESIGNATED AREA. THE DISCHARGE OF WATER, WASTE CONCRETE, POLLUTANTS, OR OTHER MATERIALS SHALL ONLY OCCUR IN AREAS DESIGNED FOR SUCH USE AND APPROVED BY THE OWNER'S REPRESENTATIVE.
24. THE CLEANING OF CONCRETE EQUIPMENT IS PROHIBITED AT THE JOB SITE EXCEPT IN DESIGNATED CONCRETE WASHOUT AREAS. THE DISCHARGE OF WATER CONTAINING WASTE CONCRETE IN THE STORM SEWER IS PROHIBITED.
25. LOCAL, STATE AND FEDERAL JURISDICTIONAL REQUIREMENTS, RESTRICTIONS OR PROCEDURES SHALL SUPERSEDE THESE PLANS, NOTES AND SPECIFICATIONS WHEN MORE STRINGENT. NOTIFY THE OWNER'S REPRESENTATIVE IF CONFLICTS OCCUR.

GENERAL LANDSCAPE NOTES

1. UTILITY WARNING: THE UTILITIES SHOWN HAVE BEEN LOCATED FROM FIELD SURVEY INFORMATION AND/OR RECORDS OBTAINED. THE SURVEYOR MAKES NO GUARANTEE THAT THE UTILITIES SHOWN COMPRISE ALL SUCH UTILITIES IN THE AREA, EITHER IN SERVICE OR ABANDONED. THE SURVEY FURTHER DOES NOT WARRANT THAT THE UTILITIES SHOWN ARE IN THE EXACT LOCATION INDICATED.
2. NOTIFY UTILITY OWNERS PRIOR TO BEGINNING ANY CONSTRUCTION. CONTRACTOR IS RESPONSIBLE FOR DETERMINING EXISTENCE, EXACT LOCATION AND DEPTH OF ALL UTILITIES. AVOID DAMAGE TO UTILITIES AND SERVICES DURING CONSTRUCTION. ANY DAMAGE DUE TO THE CONTRACTOR'S CARELESSNESS SHALL BE CORRECTED AT THE CONTRACTOR'S EXPENSE. COORDINATE AND COOPERATE WITH UTILITY COMPANIES DURING CONSTRUCTION.
3. THE CONTRACTOR SHALL FOLLOW THE LANDSCAPE PLANS AND SPECIFICATIONS AS CLOSELY AS POSSIBLE. ANY SUBSTITUTION OR ALTERATION SHALL NOT BE ALLOWED WITHOUT APPROVAL OF THE OWNER'S REPRESENTATIVE. OVERALL PLANT QUANTITY AND QUALITY SHALL BE CONSISTENT WITH THE PLANS.
4. ALL PLANT MATERIAL SHALL AT LEAST MEET MINIMUM REQUIREMENTS SHOWN IN THE "AMERICAN STANDARDS FOR NURSERY STOCK" (ANSI Z60.1-LATEST EDITION).
5. MULCH SHALL NOT BE PLACED AROUND THE COLLAR OF SHRUB OR TREE. PROVIDE A MINIMUM OF 2" BETWEEN MULCH AND COLLAR OF SHRUB OR TREE.
6. ALL PLANT MATERIAL SHALL BE GROWN IN ZONE CAPABLE OF WITHSTANDING LOCAL CLIMATE AND GROWING CONDITIONS.
7. TREE OR SHRUB SHALL STAND PLUMB. DO NOT ALLOW AIR POCKETS TO FORM WHEN BACK FILLING.
8. LIVE PLANTS CAN BE PLANTED IN THE FIELD DURING THE GROWING SEASON FROM MAY 1 THROUGH OCTOBER 1. ANY SUGGESTED PLANTING TIMES NOT IN THIS WINDOW SHALL BE APPROVED BY LANDSCAPE ARCHITECT. IF PLANTING OCCURS OUTSIDE OF THIS WINDOW, ADDITIONAL MEASURES MAY NEED TO BE TAKEN (I.E. MULCH) TO ENSURE PLANT SURVIVAL. IN THESE INSTANCES, THE CONTRACT PRICE MAY NEED TO BE ADJUSTED ACCORDINGLY.
9. PLANTS SHOULD BE WATERED IN AFTER INSTALLATION TO ENSURE THEIR SURVIVAL. THIS TYPICALLY INVOLVES WATERING AT TIME OF INSTALLATION AND 2 TIMES WEEKLY FOR A ONE MONTH PERIOD OR UNTIL GROUND FREEZE UP IF NATURAL RAINFALLS ARE INSUFFICIENT. A SINGLE WATERING EVENT INVOLVES WATERING THE SOIL IN THE PLANTED AREAS TO THE POINT OF SATURATION BUT STOPPING SHORT OF SOIL DISPLACEMENT. SHOULD VERY DRY CONDITIONS DEVELOP WITHIN ONE YEAR OF PLANTING, ADDITIONAL WATERINGS MAY BE NECESSARY, CONSULTANT OR LANDSCAPE ARCHITECT WILL DETERMINE THIS AND CONTRACT PRICES MAY BE ADJUSTED TO ACCOMMODATE THIS ACTION.
10. ALL PLANT MATERIAL SHALL BE SPECIMEN QUALITY, HEALTHY, FREE OF DISEASE AND INSECTS AND SHALL HAVE HEALTHY, WELL-DEVELOPED ROOT SYSTEMS. PLANTS SHALL ALSO BE FREE FROM PHYSICAL DAMAGE OR OTHER CONDITIONS THAT WOULD PREVENT VIGOROUS GROWTH.
11. ALL PROPOSED PLANTS SHALL BE LOCATED AS SHOWN ON PLANS. ALL TREES TO BE PLANTED A MINIMUM DISTANCE OF 5 FEET FROM PAVEMENTS AND 6 FEET FROM ALL HYDRANTS.
12. CONTRACTOR IS RESPONSIBLE FOR PLANTS AWAITING INSTALLATION AND SHALL PROTECT THEM FROM INJURY AND THEFT.
13. THE CONTRACTOR IS RESPONSIBLE FOR VERIFYING ALL PLANT QUANTITIES. GRAPHIC QUANTITIES TAKES PRECEDENCE OVER WRITTEN QUANTITIES.
14. THE OWNER'S REPRESENTATIVE RESERVES THE RIGHT TO INSPECT AND TAG ALL PLANT MATERIAL PRIOR TO SHIPPING TO THE SITE. IN ALL CASES, THE OWNER'S REPRESENTATIVE MAY REJECT PLANT MATERIAL AT THE SITE IF MATERIAL IS DAMAGED, DISEASED, OR DECLINING IN HEALTH AT THE TIME OF ONSITE INSPECTIONS OR IF THE PLANT MATERIAL DOES NOT MEET THE MINIMUM SPECIFIED STANDARD IDENTIFIED ON THE PLANS AND IN THE SPECIFICATIONS. THE CONTRACTOR SHALL COORDINATE WITH THE OWNER'S REPRESENTATIVE FOR INSPECTION AND APPROVAL OF ALL MATERIALS AND PRODUCTS PRIOR TO INSTALLATION.
15. THE OWNER'S REPRESENTATIVE MAY ELECT TO UPSIZE PLANT MATERIAL AT THEIR DISCRETION BASED ON SELECTION, AVAILABILITY, OR TO ENHANCE SPECIFIC AREAS OF THE PROJECT. THE CONTRACTOR SHALL VERIFY PLANT MATERIAL SIZES WITH OWNER'S REPRESENTATIVE PRIOR TO PURCHASING, SHIPPING OR STOCKING OF PLANT MATERIALS. SUBMIT CHANGE ORDER REQUEST TO OWNER'S REPRESENTATIVE FOR APPROVAL IF ADDITIONAL COST IS REQUESTED BY THE CONTRACTOR PRIOR TO INSTALLATION. RE-STOCKING CHARGES WILL NOT BE APPROVED IF THE CONTRACTOR FAILS TO SUBMIT A REQUEST FOR MATERIAL CHANGES.
16. THE CONTRACTOR SHALL WARRANTY ALL CONTRACTED WORK AND MATERIALS FOR A PERIOD OF ONE YEAR AFTER SUBSTANTIAL COMPLETION HAS BEEN ISSUED BY THE OWNER'S REPRESENTATIVE FOR THE ENTIRE PROJECT UNLESS OTHERWISE SPECIFIED IN THE CONTRACT DOCUMENTS OR SPECIFICATIONS.
17. LANDSCAPE MATERIAL LOCATIONS SHALL HAVE PRECEDENCE OVER IRRIGATION MAINLINE AND LATERAL LOCATIONS. COORDINATE INSTALLATION OF IRRIGATION EQUIPMENT SO THAT IT DOES NOT INTERFERE WITH THE PLANTING OF TREES OR OTHER LANDSCAPE MATERIAL.

GENERAL LANDSCAPE NOTES CONTINUED

18. THE LANDSCAPE CONTRACTOR SHALL BE RESPONSIBLE FOR ENSURING POSITIVE DRAINAGE EXISTS IN ALL LANDSCAPE AREAS. SURFACE DRAINAGE ON LANDSCAPE AREAS SHALL NOT FLOW TOWARD STRUCTURES AND FOUNDATIONS. MAINTAIN SLOPE AWAY FROM FOUNDATIONS PER THE GEOTECHNICAL REPORT RECOMMENDATIONS. ALL LANDSCAPE AREAS BETWEEN WALKS AND CURBS SHALL DRAIN FREELY TO THE CURB UNLESS OTHERWISE IDENTIFIED ON THE GRADING PLAN. IN NO CASE SHALL THE GRADE, TURF THATCH, OR OTHER LANDSCAPE MATERIALS DAM WATER AGAINST WALKS. MINIMUM SLOPES ON LANDSCAPE AREAS SHALL BE 2%; MAXIMUM SLOPE SHALL BE 25% UNLESS SPECIFICALLY IDENTIFIED ON THE PLANS OR APPROVED BY THE OWNER'S REPRESENTATIVE.
19. PRIOR TO INSTALLATION OF PLANT MATERIALS, AREAS THAT HAVE BEEN COMPACTED OR DISTURBED BY CONSTRUCTION ACTIVITY SHALL BE THOROUGHLY LOOSENED TO A DEPTH OF 8" - 12" AND AMENDED PER SPECIFICATIONS.
20. ALL LANDSCAPED AREAS ARE TO RECEIVE ORGANIC SOIL PREPARATION PER RATE IDENTIFIED BY A SOIL TEST OR AS NOTED IN THE TECHNICAL SPECIFICATIONS.
21. TREES SHALL NOT BE LOCATED IN DRAINAGE SWALES, DRAINAGE AREAS, OR UTILITY EASEMENTS. CONTACT OWNER'S REPRESENTATIVE FOR RELOCATION OF PLANTS IN QUESTIONABLE AREAS PRIOR TO INSTALLATION.
22. THE CENTER OF EVERGREEN TREES SHALL NOT BE PLACED CLOSER THAN 8' AND THE CENTER OF ORNAMENTAL TREES CLOSER THAN 6' FROM A SIDEWALK, STREET OR DRIVE LANE. EVERGREEN TREES SHALL NOT BE LOCATED ANY CLOSER THAN 15' FROM IRRIGATION ROTOR HEADS. NOTIFY OWNER'S REPRESENTATIVE IF TREE LOCATIONS CONFLICT WITH THESE STANDARDS FOR FURTHER DIRECTION.
23. ALL EVERGREEN TREES SHALL BE FULLY BRANCHED TO THE GROUND AND SHALL NOT EXHIBIT SIGNS OF ACCELERATED GROWTH AS DETERMINED BY THE OWNER'S REPRESENTATIVE.
24. ALL TREES ARE TO BE STAKED AND GUYED PER DETAILS FOR A PERIOD OF 1 YEAR. THE CONTRACTOR SHALL BE RESPONSIBLE FOR REMOVING STAKES AT THE END OF 1 YEAR FROM ACCEPTANCE OF LANDSCAPE INSTALLATION BY THE OWNER'S REPRESENTATIVE. OBTAIN APPROVAL BY OWNER'S REPRESENTATIVE PRIOR TO REMOVAL.
25. ALL TREES INSTALLED ABOVE RETAINING WALLS UTILIZING GEO-GRID MUST BE HAND DUG TO PROTECT GEO-GRID. IF GEO-GRID MUST BE CUT TO INSTALL TREES, APPROVAL MUST BE GIVEN BY OWNER'S REPRESENTATIVE PRIOR TO DOING WORK.
26. ALL TREES IN SEED OR TURF AREAS SHALL RECEIVE MULCH RINGS. OBTAIN APPROVAL FROM OWNER'S REPRESENTATIVE FOR ANY TREES THAT WILL NOT BE MULCHED FOR EXCESSIVE MOISTURE REASONS.
27. EXISTING TURF AREAS THAT ARE DISTURBED DURING CONSTRUCTION, ESTABLISHMENT AND THE MAINTENANCE PERIOD SHALL BE RESTORED WITH NEW SOD TO MATCH EXISTING TURF SPECIES. DISTURBED NATIVE AREAS WHICH ARE TO REMAIN SHALL BE OVER SEEDED AND RESTORED WITH SPECIFIED SEED MIX.
28. WHEN COMPLETE, ALL GRADES SHALL BE WITHIN +/- 1/8" OF FINISHED GRADES AS SHOWN ON THE PLANS.
29. WHEN PLANTER POTS ARE SHOWN ON PLANS, CONTRACTOR SHALL INCLUDE THE FOLLOWING: PLANTER MIX, ANNUAL FLOWER PLANTING PROGRAM (INCLUDES 2 PLANTINGS FOR THE 1ST YEAR (SPRING AND FALL) AND WINTER HAND-WATERING AS NEEDED. UNLESS OTHERWISE SPECIFIED, CONTRACTOR TO PROVIDE ANNUAL PLANTING SELECTION FOR REVIEW BY OWNER. IRRIGATION FOR PLANTERS TO BE ON SEPARATE ZONE(S). CONTRACTOR TO COORDINATE PLACEMENT OF NECESSARY SLEEVING PRIOR TO PLACEMENT OF PAVEMENT.
30. PRIOR TO THE PLACEMENT OF MULCH AND WEED FABRIC, A GRANULAR, PRE-EMERGENT, WEED CONTROL AGENT SHALL BE ADDED TO ALL PLANTING BEDS IN ACCORDANCE WITH THE MANUFACTURER'S INSTRUCTION, EXCEPT AROUND ORNAMENTAL GRASSES.
31. THE CONTRACTOR IS EXPECTED TO KNOW AND UNDERSTAND THE CITY AND COUNTY SPECIFICATIONS FOR LANDSCAPE AND IRRIGATION. IN CASES OF DISCREPANCIES THE HIGHER OF THE TWO STANDARDS SHALL HAVE PRECEDENCE.
32. ALL TREES PLANTED WITHIN RIGHT-OF-WAY WILL INCLUDE CITY APPROVED ROOT BARRIERS.
33. REFER TO SHEET IR101-IR104 FOR THE IRRIGATION PLAN AND POINT OF CONNECTION INFORMATION.

TO OBTAIN LOCATION OF PARTICIPANTS' UNDERGROUND FACILITIES BEFORE YOU DIG IN WISCONSIN

CALL DIGGERS HOTLINE
1-800-242-8511
TOLL FREE

WIS. STATUTE 182.0175 (1974) REQUIRES MIN. OF 3 WORK DAYS NOTICE BEFORE YOU EXCAVATE

PLANT SCHEDULE

QTY	KEY	BOTANICAL NAME	COMMON NAME	INSTALL SIZE	MATURE SIZE	COMMENTS
CANOPY TREES						
3	AG	Ginkgo biloba 'Autumn Gold'	AUTUMN GOLD GINKGO	2 1/2" Cal.	50'h x 40'W	B&B (MALE ONLY)
10	RO	Quercus rubra	NORTHERN RED OAK	2 1/2" Cal.	60'h x 60'W	B&B
13	SH	Gleditsia tricanthos var. inermis 'Skycole'	SKYLINE HONEYLOCUST	2 1/2" Cal.	50'h x 20'W	B&B
23	SM	Acer x freemanii 'Sienna'	SIENNA GLEN MAPLE	2 1/2" Cal.	60'h x 40'W	B&B
10	TE	Ulmus "Morton Glossy'	TRIUMPH ELM	2 1/2" Cal.	55'h x 45'W	B&B
5	EQ	Acer platanoides 'Emerald Queen'	EMERALD QUEEN MAPLE	2 1/2" Cal.	50'h x 40'W	B&B
4	LG	Tilia cordata	GREENSPIRE LINDEN	2 1/2" Cal.	40'h x 30'W	B&B
EVERGREEN TREES						
13	SJ	Juniperus scopulorum 'Baligh'	SKYHIGH JUNIPER	4'	12'h x 5'W	B&B
8	AP	Pinus nigra	AUSTRIAN PINE	8'	50'h x 20'W	B&B
7	SP	Pinus Sylvestris	SCOTCH PINE	8'	50'h x 20'W	B&B
ORNAMENTAL TREES						
18	PC	Malus x 'Prairifire'	PRAIRIFIRE CRABAPPLE	1 1/2" Cal.	20'h x 20'W	B&B
12	JP	Pyrus calleryana 'Jaczam'	JACK FLOWERING PEAR	1 1/2" Cal.	20'h x 10'W	B&B
7	AC	Prunus maackii	AMUR CHOCKCHERRY	1 1/2" Cal.	25'h x 20'W	B&B
7	BW	Betula populifolia 'Whitespire'	WHITESPIRE BIRCH TWIN	1 1/2" Cal.	40'h x 20'W	B&B
DECIDUOUS SHRUBS						
2'-4' SPREAD						
9	GP	Potentilla fruticosa 'Goldfinger'	GOLDFINGER POTENTILLA	18" Ht.	3'h x 4'W	#5 CONT. (4' O.C.)
0	GS	Spiraea betulifolia 'TorGold'	GLOW GIRL SPIREA	18" Ht.	2'h x 4'W	#5 CONT. (4' O.C.)
10	AF	Cornus stolonifera 'Farrow'	ARCTIC FIRE DOGWOOD	18" Ht.	3'h x 3'W	#5 CONT. (3' O.C.)
5'-7' SPREAD						
18	RC	Cotoneaster horizontalis var. perpusilus	ROCK COTONEASTER	6" Ht.	1.5'h x 5'W	#5 CONT. (6' O.C.)
27	SF	Forsythia x intermedia 'Mindor'	SHOW OFF FORSYTHIA	24" Ht.	6'h x 6'W	#5 CONT. (6' O.C.)
61	UC	Aronia 'Erecta'	UPRIGHT RED CHOKEBERRY	18" Ht.	5'h x 5'W	#5 CONT. (6' O.C.)
51	SN	Nipponica 'Snowmound'	SNOWMOUND SPIREA	24" Ht.	3'h x 5'W	#5 CONT. (6' O.C.)
7' + SPREAD						
16	AS	Amelanchier x grandiflora	AUTUMN BRILLIANCE SERVICEBERRY	36" Ht.	15'h x 10'	CLUMP #15 CONT.
91	DB	Euonymus alatus 'Compactus'	DWARF-WINGED BURNING BUSH	36" Ht.	9'h x 10W'	#5 CONT. (8' O.C.)
71	FS	Rhus aromatica	FRAGRANT SUMAC	24" Ht.	5'h x 8'W	#5 CONT. (7' O.C.)
51	BV	Virburnum prunifolium	BLACKHAW VIBURNUM	24" Ht.	12'h x 12'W	#5 CONT. (10' O.C.)
EVERGREEN SHRUBS						
2'-4' SPREAD						
8	JJ	Juniperus procumbens 'Nana'	DWARF JAPANESE GARDEN JUNIPER	12" Ht.	1.5'h x 4'W	#5 CONT. (4' O.C.)
5'-7' SPREAD						
125	JA	Juniperus horizontalis 'Plumosa'	ANDORRA JUNIPER	6" Ht.	18"h x 5'W	#5 CONT. (6' O.C.)
43	DY	T. Cuspidata 'Nana'	DWARF YEW (BREVIFOLIA)	18" Ht.	3'h x 6'W	#5 CONT. (6' O.C.)
7' + SPREAD						
17	MP	Pinus mugo var. pumilio	DWARF MUGO PINE	24" Ht.	4'h x 10w	#5 CONT. (8' O.C.)
21	RW	Rhododendron catawbiense 'Album'	WHITE CATAWBA RHODODENDRON	24" Ht.	6'h x 7w	#5 CONT. (6' O.C.)
15	TY	T. x media "tauntoni'	TAUNTON YEW	24" Ht.	4'h x 7w	#5 CONT. (6'O.C.)
ORNAMENTAL GRASSES						
37	BA	Bouteloua gracilis 'blonde ambition'	BLONDE AMBITION BLUE GRAMA GRASS	8" Ht.	36" Ht.	#1 CONT. (3' O.C.)
129	SS	Panicum virgatum 'shenandoah'	SHENANDOAH SWITCH GRASS	8" Ht.	48" Ht.	#1 CONT. (6' O.C.)
63	PD	Sporobolus heterolepis	PRAIRIE DROPSEED	8" Ht.	36" Ht.	#1 CONT. (3' O.C.)
0	BB	Andropogon gerardii	BIG BLUESTEM	8" Ht.	62" Ht.	#1 CONT. (4' O.C.)
86	LB	Schizachyrium scoparium	LITTLE BLUESTEM	8" Ht.	36" Ht.	#1 CONT. (3' O.C.)

LANDSCAPE CALCULATIONS AND DISTRIBUTION

STREET FRONTAGE REQUIREMENTS:
REQUIREMENT: 1 OVERSTORY TREE AND 5 SHRUBS PER 30 LF OF FRONTAGE

ADVANTAGE DRIVE: 269 LF/30 LF
REQUIRED: 8.96 OVERSTORY TREES AND 44.8 SHRUBS
PROPOSED: 10 TREES (7 OVRESTORY TREES AND 7 ORNAMENTAL/EVERGREEN TREES COUNTED AS 4) AND 127 SHRUBS

WIND STONE DRIVE (WEST SIDE OF STREET): 525 LF/30LF
REQUIRED: 17.5 OVERSTORY TREES AND 87.5 SHRUBS
PROPOSED: 18 TREES (14 OVERSTORY AND 8 ORNAMENTAL COUNTED AS 4) AND 90 SHRUBS

WIND STONE DRIVE (EAST SIDE OF STREET): 487 LF/30LF
REQUIRED 16.2 OVERSTORY TREES AND 81.6 SHRUBS
PROPOSED: 15 (12 OVERSTORY TREES AND 6 ORNAMENTAL/EVERGREEN TREES COUNTED AS 3) AND 82 SHRUBS

MILWAUKEE STREET: 390 LF/30LF
REQUIRED: 13 OVERSTORY TREES AND 65 SHRUBS
PROPOSED: 15 TREES (9 OVERSTORY TREES AND 11 ORNAMENTAL TREES COUNTED AS 6) AND 144 SHRUBS

MEADOWS LAND DRIVE (NORTH SIDE OF STREET): 70 LF/30LF
REQUIRED: 2.3 OVERSTORY TREES AND 11.6 SHRUBS
PROPOSED: 5 TREES (2 OVER STORY AND 2 EVERGREEN COUNTED AS 1) AND 7 SHRUBS

MEADOWS LAND DRIVE (SOUTH SIDE OF STREET) 70 LF/30LF
REQUIRED: 2.3 OVERSTORY TREES AND 11.6 SHRUBS
PROPOSED: 3 TREES (2 OVER STORY AND 2 EVERGREEN COUNTED AS 1) AND 8 SHRUBS

INTERIOR PARKING LOT REQUIREMENTS:
REQUIREMENT: 8% OF PAVEMENT AREA TO BE USED AS LANDSCAPED AREAS
1 DECIDUOUS TREE FOR EVERY 160 SF OF LANDSCAPE AREA
42,820 SF X 8% = 3,427 REQUIRED (5,970 SF PROVIDED)

REQUIREMENT: 1 SHADE TREE PER 160 SF OF REQUIRED LANDSCAPED AREA
3,426 SF /160 SF = 21 TREES REQUIRED (17 PROVIDED - EXISTING GAS EASEMENTS RESTRICT THE AVAILABLE SPACE FOR REQUIRED TREES)

DEVELOPED LOT REQUIREMENTS:
REQUIREMENT: 5 POINTS PER 300 SF OF DEVELOPED AREA FOR 5 ACRES AND 1 POINT PER 100 SF FOR ADDITIONAL ACRES
TOTAL DEVELOPED AREA: 87,102 SF
FIRST 5 ACRES = 3,630 POINTS
REMAINING 2 ACRES = 871.20 POINTS
TOTAL POINTS = 4,202
TOTAL PROPOSED = 6,456

MARK	REVISION	DATE	BY
#	#	#	#
#	#	#	#
#	#	#	#
#	#	#	#

Engineer: BCA | Checked By: MLC | Scale: 1" = NOTED
Technician: BCA | Date: 01-07-2019 | Field Bk: | Pg:

118.1129.30

L1.0

MADISON, WI

THE MEADOWLANDS - PHASE 11

LANDSCAPE NOTES

SNYDER & ASSOCIATES, INC.
5010 VOGES ROAD
MADISON, WISCONSIN 53718
608-838-0444 | www.snyder-associates.com

SNYDER & ASSOCIATES

118.1129.30

L1.0

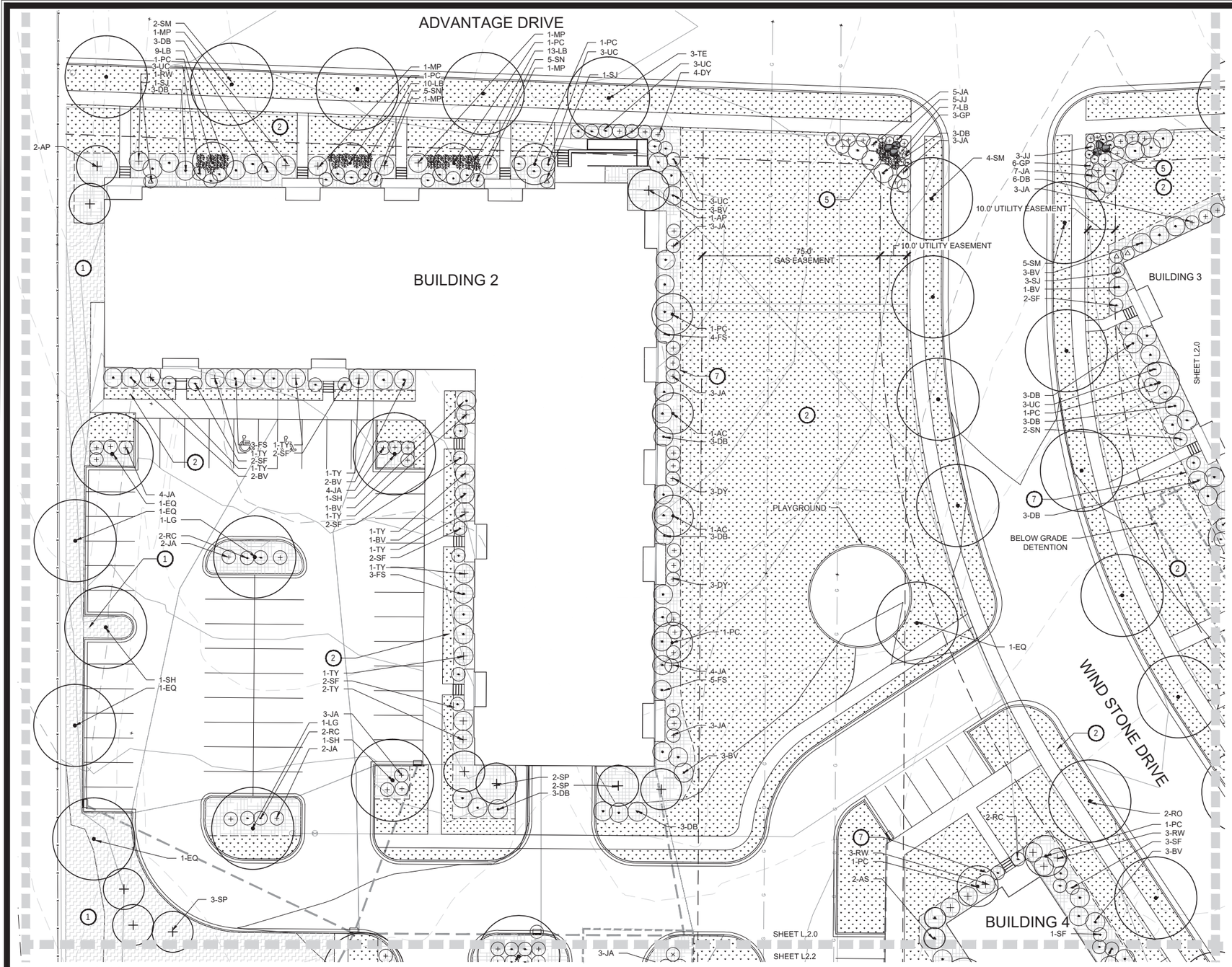

PLANTING PLAN

PLANTING PLAN CONSTRUCTION NOTES

1. TURF SEED MIX SHALL BE VELVET GREEN TURF MIX BY HERITAGE SEED COMPANY OR APPROVED EQUAL. MIX SHALL INCLUDE 40% KENTUCKY BLUEGRASS, 40% PERENNIAL RYEGRASS, 20% FINE FESCUE.
2. BLACK BEAUTY TALL FESCUE KENTUCKY BLUEGRASS (TFKB SOD) PROVIDED BY PAUL'S TURF & TREE NURSERY (608.655.3600) OR APPROVED EQUAL.
3. 2-6" COBBLE MULCH PROVIDED BY MILESTONE MATERIALS OR APPROVED EQUAL. SUBMIT SAMPLE FOR APPROVAL.
4. DECOMPOSED BROWN GRANITE WITH TACKIFIER PROVIDED BY MIDWEST DECORATIVE STONE & LANDSCAPE SUPPLY (608.273.9787) OR APPROVED EQUAL.
5. AQUA BLUE BOULDERS APPROXIMATELY 3' X 3' X 3' PROVIDED BY MIDWEST DECORATIVE STONE & LANDSCAPE SUPPLY (608.273.9787) OR APPROVE EQUAL. SUBMIT PHOTO SAMPLES PRIOR TO PURCHASE.
6. PROVIDE 3" DEPTH SHREDDED HARDWOOD MULCH AROUND ALL STAND-ALONE TREES TO A MIN. 3-FOOT PERIMETER, AND IN ALL AREAS NOTED ON PLANS OVER GEOTEXTILE WEED CONTROL FABRIC. NO WEED CONTROL FABRIC IS REQUIRED IN GROUNDCOVER OR PERENNIAL AREAS. MULCHED LANDSCAPE BEDS SHALL HAVE A SPADED VERTICAL EDGE WHEN PERIMETER IS NOT CONCRETE CURB.
7. MULCHED LANDSCAPE BEDS SHALL HAVE A SPADED VERTICAL EDGE AT 4" DEPTH WHEN PERIMETER IS NOT CONCRETE SIDEWALK OR CURB.
8. REFER TO CONSTRUCTION SEQUENCE FOR NOTES REGARDING SITE RESTORATION.

PLANT SCHEDULE

	KEY	COMMON NAME
CANOPY TREES		
	AG	AUTUMN GOLD GINKGO
	RO	NORTHERN RED OAK
	SH	SKYLINE HONEYLOCUST
	SM	SIENNA GLEN MAPLE
	TE	TRIUMPH ELM
	EQ	EMERALD QUEEN MAPLE
	LG	GREENSPIRE LINDEN
EVERGREEN TREES		
	SJ	SKYHIGH JUNIPER
	AP	AUSTRIAN PINE
	SP	SCOTCH PINE
ORNAMENTAL TREES		
	PC	PRAIRIFIRE CRABAPPLE
	JP	JACK FLOWERING PEAR
	AC	AMUR CHOCKCHERRY
	BW	WHITESPIRE BIRCH TWIN
DECIDUOUS SHRUBS		
2'-4' SPREAD		
	GP	GOLDFINGER POTENTILLA
	GS	GLOW GIRL SPIREA
	AF	ARCTIC FIRE DOGWOOD
5'-7' SPREAD		
	RC	ROCK COTONEASTER
	SF	SHOW OFF FORSYTHIA
	UC	UPRIGHT RED CHOKEBERRY
	SN	SNOWMOUND SPIREA
7' + SPREAD		
	AS	AUTUMN BRILLIANCE SERVICEBERRY
	DB	DWARF-WINGED BURNING BUSH
	FS	FRAGRANT SUMAC
	BV	BLACKHAW VIBURNUM
EVERGREEN SHRUBS		
2'-4' SPREAD		
	JJ	DWARF JAPANESE GARDEN JUNIPER
5'-7' SPREAD		
	JA	ANDORRA JUNIPER
	DY	DWARF YEW (BREVIFOLIA)
7' + SPREAD		
	MP	DWARF MUGO PINE
	RW	WHITE CATAWBA RHODODENDRON
	TY	TAUNTON YEW
ORNAMENTAL GRASSES		
	BA	BLONDE AMBITION BLUE GRAMA GRASS
	SS	SHENANDOAH SWITCH GRASS
	PD	PRAIRIE DROPSEED
	BB	BIG BLUESTEM
	LB	LITTLE BLUESTEM

LANDSCAPE LEGEND

- SOD, REFER TO CONSTRUCTION NOTES FOR TYPE
- SHRUB BED WITH HARDWOOD MULCH, REFER TO CONSTRUCTION NOTES FOR TYPE
- TURF SEED, REFER TO CONSTRUCTION NOTES FOR TYPE
- DECOMPOSED GRANITE, REFER TO CONSTRUCTION NOTES FOR TYPE
- COBBLE, REFER TO CONSTRUCTION NOTES FOR TYPE
- SPADE CUT EDGER AT 4" DEPTH
- DECIDUOUS CANOPY TREE
- LARGE DECIDUOUS ORNAMENTAL TREE
- EVERGREEN
- DECIDUOUS SHRUBS
- EVERGREEN SHRUBS
- UPRIGHT EVERGREEN
- ORNAMENTAL GRASSES
- LANDSCAPE BOULDERS

NORTH

0 10 20 40

SCALE 1" = 20'

TO OBTAIN LOCATION OF PARTICIPANTS' UNDERGROUND FACILITIES BEFORE YOU DIG IN WISCONSIN

CALL DIGGERS HOTLINE
1-800-242-8511
TOLL FREE

WIS. STATUTE 182.0175 (1974) REQUIRES MIN. OF 3 WORK DAYS NOTICE BEFORE YOU EXCAVATE

MARK	REVISION	DATE	BY
#	#	#	#
#	#	#	#
#	#	#	#
#	#	#	#

Engineer: BCA | Checked By: MLC | Scale: 1" = NOTED
Technician: BCA | Date: 01-07-2019 | Field Bk: | Pg:

118.1129.30

MADISON, WI

THE MEADOWLANDS - PHASE 11

LANDSCAPE PLAN

SNYDER & ASSOCIATES, INC.
5010 VOGES ROAD
MADISON, WISCONSIN 53718
608-838-0444 | www.snyder-associates.com

SNYDER & ASSOCIATES

118.1129.30

L2.0

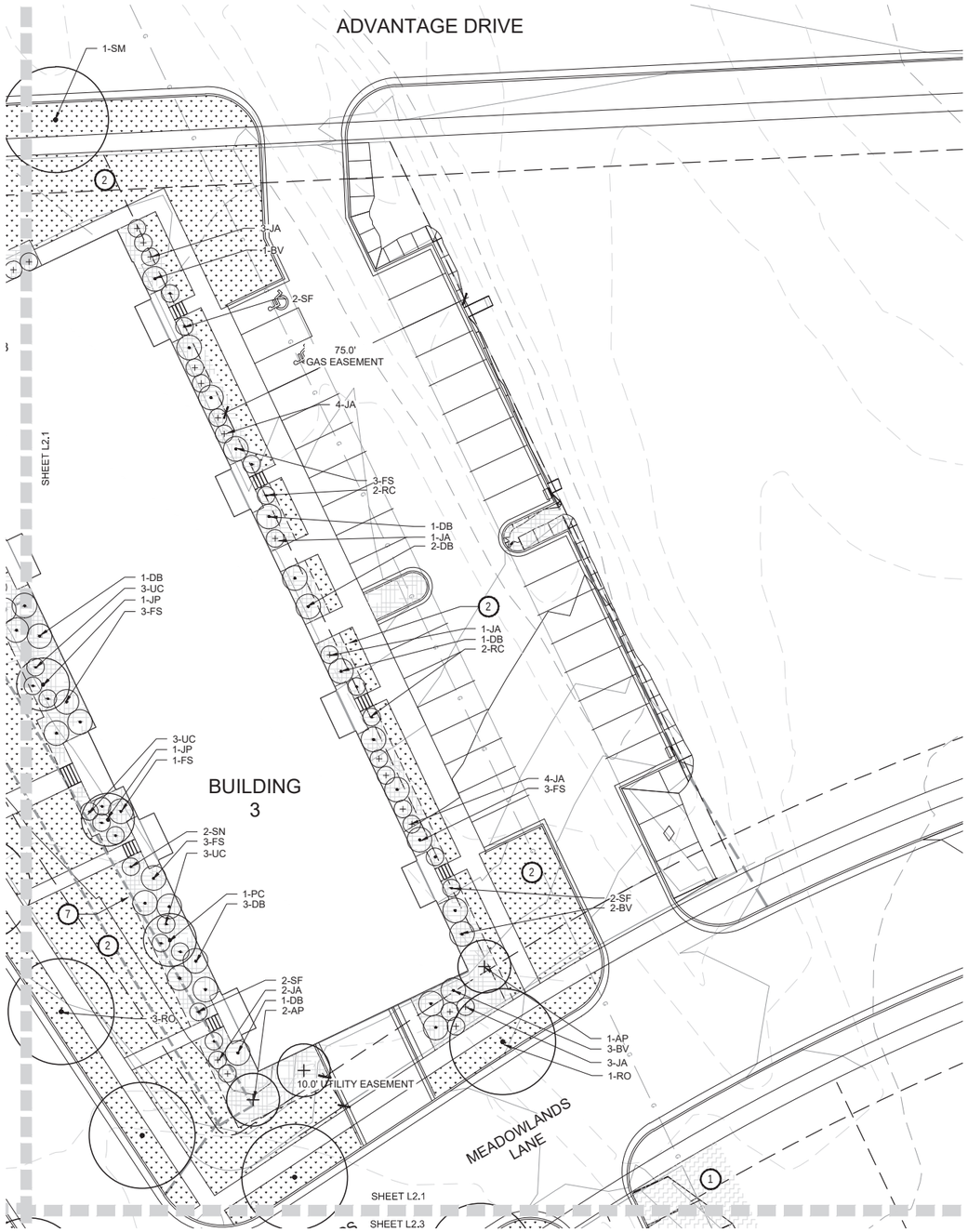

PLANTING PLAN

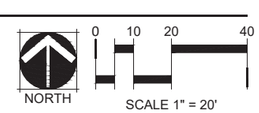

PLANTING PLAN CONSTRUCTION NOTES

1. TURF SEED MIX SHALL BE VELVET GREEN TURF MIX BY HERITAGE SEED COMPANY OR APPROVED EQUAL. MIX SHALL INCLUDE 40% KENTUCKY BLUEGRASS, 40% PERENNIAL RYEGRASS, 20% FINE FESCUE.
2. BLACK BEAUTY TALL FESCUE KENTUCKY BLUEGRASS (TFKB SOD) PROVIDED BY PAUL'S TURF & TREE NURSERY (608.655.3600) OR APPROVED EQUAL.
3. 2-6" COBBLE MULCH PROVIDED BY MILESTONE MATERIALS OR APPROVED EQUAL. SUBMIT SAMPLE FOR APPROVAL.
4. DECOMPOSED BROWN GRANITE WITH TACKIFIER PROVIDED BY MIDWEST DECORATIVE STONE & LANDSCAPE SUPPLY (608.273.9787) OR APPROVED EQUAL.
5. AQUA BLUE BOULDERS APPROXIMATELY 3' X 3' X 3' PROVIDED BY MIDWEST DECORATIVE STONE & LANDSCAPE SUPPLY (608.273.9787) OR APPROVE EQUAL. SUBMIT PHOTO SAMPLES PRIOR TO PURCHASE.
6. PROVIDE 3" DEPTH SHREDDED HARDWOOD MULCH AROUND ALL STAND-ALONE TREES TO A MIN. 3-FOOT PERIMETER, AND IN ALL AREAS NOTED ON PLANS OVER GEOTEXTILE WEED CONTROL FABRIC. NO WEED CONTROL FABRIC IS REQUIRED IN GROUNDCOVER OR PERENNIAL AREAS. MULCHED LANDSCAPE BEDS SHALL HAVE A SPADED VERTICAL EDGE WHEN PERIMETER IS NOT CONCRETE CURB.
7. MULCHED LANDSCAPE BEDS SHALL HAVE A SPADED VERTICAL EDGE AT 4" DEPTH WHEN PERIMETER IS NOT CONCRETE SIDEWALK OR CURB.
8. REFER TO CONSTRUCTION SEQUENCE FOR NOTES REGARDING SITE RESTORATION.

PLANT SCHEDULE

	KEY	COMMON NAME
CANOPY TREES		
	AG	AUTUMN GOLD GINKGO
	RO	NORTHERN RED OAK
	SH	SKYLINE HONEYLOCUST
	SM	SIENNA GLEN MAPLE
	TE	TRIUMPH ELM
	EQ	EMERALD QUEEN MAPLE
	LG	GREENSPIRE LINDEN
EVERGREEN TREES		
	SJ	SKYHIGH JUNIPER
	AP	AUSTRIAN PINE
	SP	SCOTCH PINE
ORNAMENTAL TREES		
	PC	PRAIRIFIRE CRABAPPLE
	JP	JACK FLOWERING PEAR
	AC	AMUR CHOCKCHERRY
	BW	WHITESPIRE BIRCH TWIN
DECIDUOUS SHRUBS		
2'-4' SPREAD		
	GP	GOLDFINGER POTENTILLA
	GS	GLOW GIRL SPIREA
	AF	ARCTIC FIRE DOGWOOD
5'-7' SPREAD		
	RC	ROCK COTONEASTER
	SF	SHOW OFF FORSYTHIA
	UC	UPRIGHT RED CHOKEBERRY
	SN	SNOWMOUND SPIREA
7' + SPREAD		
	AS	AUTUMN BRILLIANCE SERVICEBERRY
	DB	DWARF-WINGED BURNING BUSH
	FS	FRAGRANT SUMAC
	BV	BLACKHAW VIBURNUM
EVERGREEN SHRUBS		
2'-4' SPREAD		
	JJ	DWARF JAPANESE GARDEN JUNIPER
5'-7' SPREAD		
	JA	ANDORRA JUNIPER
	DY	DWARF YEW (BREVIFOLIA)
7' + SPREAD		
	MP	DWARF MUGO PINE
	RW	WHITE CATAWBA RHODODENDRON
	TY	TAUNTON YEW
ORNAMENTAL GRASSES		
	BA	BLONDE AMBITION BLUE GRAMA GRASS
	SS	SHENANDOAH SWITCH GRASS
	PD	PRAIRIE DROPSEED
	BB	BIG BLUESTEM
	LB	LITTLE BLUESTEM

LANDSCAPE LEGEND

- SOD, REFER TO CONSTRUCTION NOTES FOR TYPE
- SHRUB BED WITH HARDWOOD MULCH, REFER TO CONSTRUCTION NOTES FOR TYPE
- TURF SEED, REFER TO CONSTRUCTION NOTES FOR TYPE
- DECOMPOSED GRANITE, REFER TO CONSTRUCTION NOTES FOR TYPE
- COBBLE, REFER TO CONSTRUCTION NOTES FOR TYPE
- SPADE CUT EDGER AT 4" DEPTH
- DECIDUOUS CANOPY TREE
- LARGE DECIDUOUS ORNAMENTAL TREE
- EVERGREEN
- DECIDUOUS SHRUBS
- EVERGREEN SHRUBS
- UPRIGHT EVERGREEN
- ORNAMENTAL GRASSES
- LANDSCAPE BOULDERS

TO OBTAIN LOCATION OF PARTICIPANTS' UNDERGROUND FACILITIES BEFORE YOU DIG IN WISCONSIN

CALL DIGGERS HOTLINE
1-800-242-8511
TOLL FREE

WIS. STATUTE 182.0175 (1974) REQUIRES MIN. OF 3 WORK DAYS NOTICE BEFORE YOU EXCAVATE

MARK	REVISION	DATE	BY
#	#	#	#
#	#	#	#
#	#	#	#

Engineer: BCA | Checked By: MLC | Scale: 1" = NOTED
Technician: BCA | Date: 01-07-2019 | Field Bk: Pg:

118.1129.30

MADISON, WI

THE MEADOWLANDS - PHASE 11

LANDSCAPE PLAN

SNYDER & ASSOCIATES, INC.
5010 VOGES ROAD
MADISON, WISCONSIN 53718
608-838-0444 | www.snyder-associates.com

SNYDER & ASSOCIATES

118.1129.30

L2.1

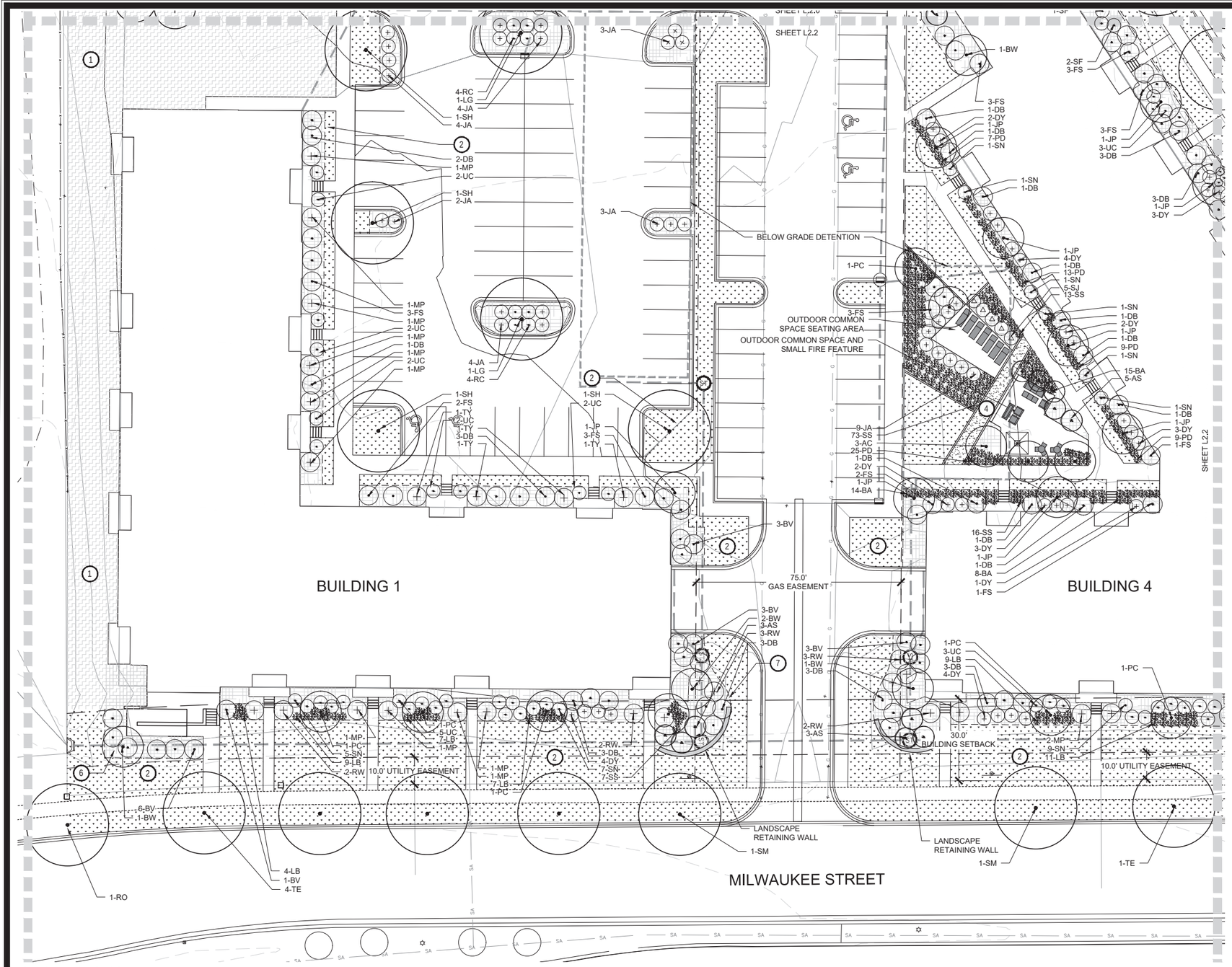

PLANTING PLAN

PLANTING PLAN CONSTRUCTION NOTES

1. TURF SEED MIX SHALL BE VELVET GREEN TURF MIX BY HERITAGE SEED COMPANY OR APPROVED EQUAL. MIX SHALL INCLUDE 40% KENTUCKY BLUEGRASS, 40% PERENNIAL RYEGRASS, 20% FINE FESCUE.
2. BLACK BEAUTY TALL FESCUE KENTUCKY BLUEGRASS (TFKB SOD) PROVIDED BY PAUL'S TURF & TREE NURSERY (608.655.3600) OR APPROVED EQUAL.
3. 2-6" COBBLE MULCH PROVIDED BY MILESTONE MATERIALS OR APPROVED EQUAL. SUBMIT SAMPLE FOR APPROVAL.
4. DECOMPOSED BROWN GRANITE WITH TACKIFIER PROVIDED BY MIDWEST DECORATIVE STONE & LANDSCAPE SUPPLY (608.273.9787) OR APPROVED EQUAL.
5. AQUA BLUE BOULDERS APPROXIMATELY 3' X 3' X 3' PROVIDED BY MIDWEST DECORATIVE STONE & LANDSCAPE SUPPLY (608.273.9787) OR APPROVE EQUAL. SUBMIT PHOTO SAMPLES PRIOR TO PURCHASE.
6. PROVIDE 3" DEPTH SHREDDED HARDWOOD MULCH AROUND ALL STAND-ALONE TREES TO A MIN. 3-FOOT PERIMETER, AND IN ALL AREAS NOTED ON PLANS OVER GEOTEXTILE WEED CONTROL FABRIC. NO WEED CONTROL FABRIC IS REQUIRED IN GROUNDCOVER OR PERENNIAL AREAS. MULCHED LANDSCAPE BEDS SHALL HAVE A SPADED VERTICAL EDGE WHEN PERIMETER IS NOT CONCRETE CURB.
7. MULCHED LANDSCAPE BEDS SHALL HAVE A SPADED VERTICAL EDGE AT 4" DEPTH WHEN PERIMETER IS NOT CONCRETE SIDEWALK OR CURB.
8. REFER TO CONSTRUCTION SEQUENCE FOR NOTES REGARDING SITE RESTORATION.

PLANT SCHEDULE

	KEY	COMMON NAME
CANOPY TREES		
	AG	AUTUMN GOLD GINKGO
	RO	NORTHERN RED OAK
	SH	SKYLINE HONEYLOCUST
	SM	SIENNA GLEN MAPLE
	TE	TRIUMPH ELM
	EQ	EMERALD QUEEN MAPLE
	LG	GREENSPIRE LINDEN
EVERGREEN TREES		
	SJ	SKYHIGH JUNIPER
	AP	AUSTRIAN PINE
	SP	SCOTCH PINE
ORNAMENTAL TREES		
	PC	PRAIRIFIRE CRABAPPLE
	JP	JACK FLOWERING PEAR
	AC	AMUR CHOCKCHERRY
	BW	WHITESPIRE BIRCH TWIN
DECIDUOUS SHRUBS		
2'-4' SPREAD		
	GP	GOLDFINGER POTENTILLA
	GS	GLOW GIRL SPIREA
	AF	ARCTIC FIRE DOGWOOD
5'-7' SPREAD		
	RC	ROCK COTONEASTER
	SF	SHOW OFF FORSYTHIA
	UC	UPRIGHT RED CHOKEBERRY
	SN	SNOWMOUND SPIREA
7' + SPREAD		
	AS	AUTUMN BRILLIANCE SERVICEBERRY
	DB	DWARF-WINGED BURNING BUSH
	FS	FRAGRANT SUMAC
	BV	BLACKHAW VIBURNUM
EVERGREEN SHRUBS		
2'-4' SPREAD		
	JJ	DWARF JAPANESE GARDEN JUNIPER
5'-7' SPREAD		
	JA	ANDORRA JUNIPER
	DY	DWARF YEW (BREVIFOLIA)
7' + SPREAD		
	MP	DWARF MUGO PINE
	RW	WHITE CATAWBA RHODODENDRON
	TY	TAUNTON YEW
ORNAMENTAL GRASSES		
	BA	BLONDE AMBITION BLUE GRAMA GRASS
	SS	SHENANDOAH SWITCH GRASS
	PD	PRAIRIE DROPSEED
	BB	BIG BLUESTEM
	LB	LITTLE BLUESTEM

LANDSCAPE LEGEND

- SOD, REFER TO CONSTRUCTION NOTES FOR TYPE
- SHRUB BED WITH HARDWOOD MULCH, REFER TO CONSTRUCTION NOTES FOR TYPE
- TURF SEED, REFER TO CONSTRUCTION NOTES FOR TYPE
- DECOMPOSED GRANITE, REFER TO CONSTRUCTION NOTES FOR TYPE
- COBBLE, REFER TO CONSTRUCTION NOTES FOR TYPE
- SPADE CUT EDGER AT 4" DEPTH
- DECIDUOUS CANOPY TREE
- LARGE DECIDUOUS ORNAMENTAL TREE
- EVERGREEN
- DECIDUOUS SHRUBS
- EVERGREEN SHRUBS
- UPRIGHT EVERGREEN
- ORNAMENTAL GRASSES
- LANDSCAPE BOULDERS

TO OBTAIN LOCATION OF PARTICIPANTS' UNDERGROUND FACILITIES BEFORE YOU DIG IN WISCONSIN

CALL DIGGERS HOTLINE
1-800-242-8511
TOLL FREE

WIS. STATUTE 182.0175 (1974) REQUIRES MIN. OF 3 WORK DAYS NOTICE BEFORE YOU EXCAVATE

MARK	REVISION	DATE	BY
#	#	#	#
#	#	#	#
#	#	#	#

Engineer: BCA | Checked By: MLC | Scale: 1" = NOTED
Technician: BCA | Date: 01-07-2019 | Field Bk: | Pg:

118.1129.30

THE MEADOWLANDS - PHASE 11
MADISON, WI

LANDSCAPE PLAN

SNYDER & ASSOCIATES, INC.
5010 VOGES ROAD
MADISON, WISCONSIN 53718
608-838-0444 | www.snyder-associates.com

SNYDER & ASSOCIATES

118.1129.30

L2.2

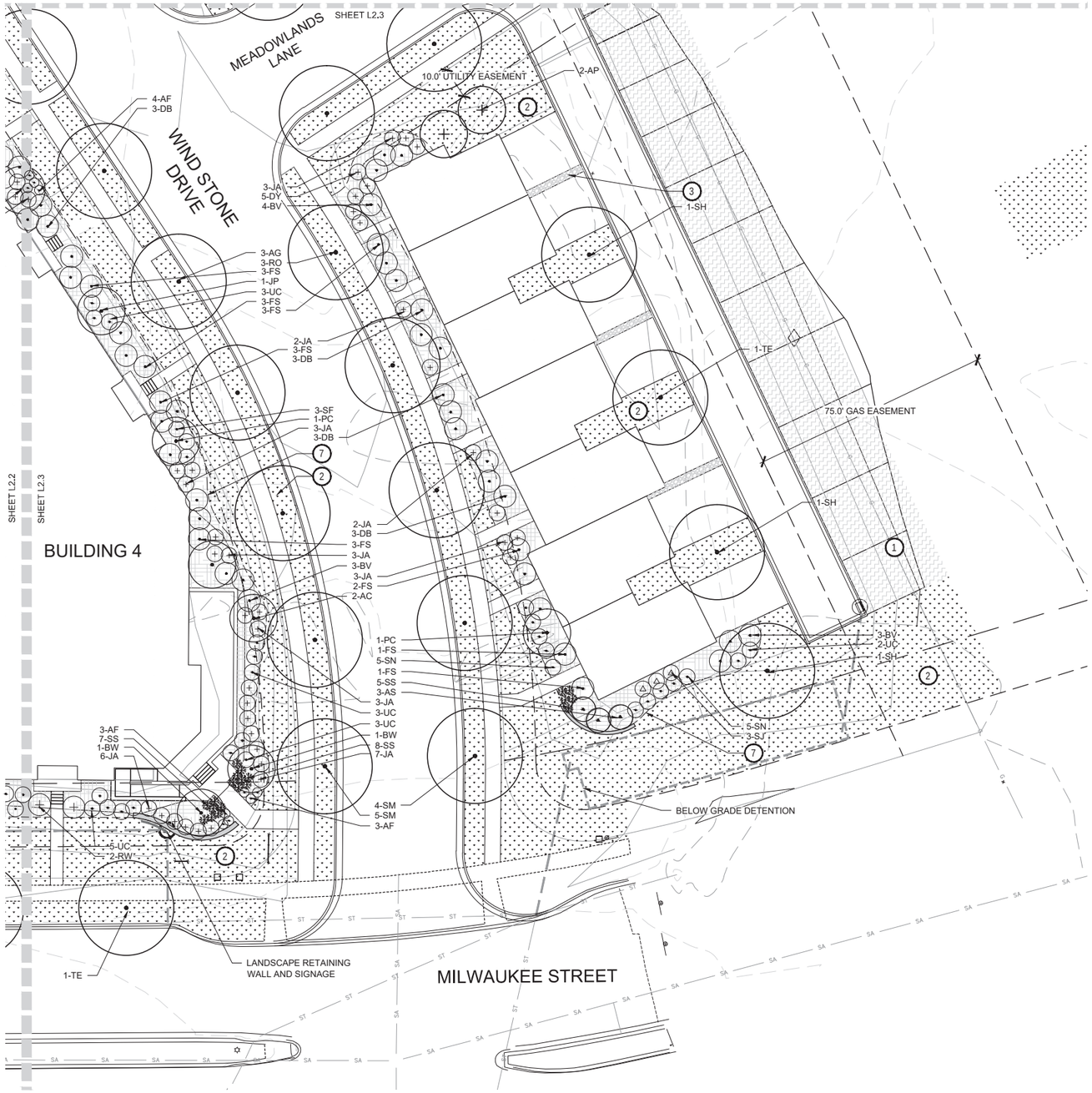

PLANTING PLAN

NORTH

0 10 20 40

SCALE 1" = 20'

PLANTING PLAN CONSTRUCTION NOTES

1. TURF SEED MIX SHALL BE VELVET GREEN TURF MIX BY HERITAGE SEED COMPANY OR APPROVED EQUAL. MIX SHALL INCLUDE 40% KENTUCKY BLUEGRASS, 40% PERENNIAL RYEGRASS, 20% FINE FESCUE.
2. BLACK BEAUTY TALL FESCUE KENTUCKY BLUEGRASS (TFKB SOD) PROVIDED BY PAUL'S TURF & TREE NURSERY (608.655.3600) OR APPROVED EQUAL.
3. 2-6" COBBLE MULCH PROVIDED BY MILESTONE MATERIALS OR APPROVED EQUAL. SUBMIT SAMPLE FOR APPROVAL.
4. DECOMPOSED BROWN GRANITE WITH TACKIFIER PROVIDED BY MIDWEST DECORATIVE STONE & LANDSCAPE SUPPLY (608.273.9787) OR APPROVED EQUAL.
5. AQUA BLUE BOULDERS APPROXIMATELY 3' X 3' X 3' PROVIDED BY MIDWEST DECORATIVE STONE & LANDSCAPE SUPPLY (608.273.9787) OR APPROVE EQUAL. SUBMIT PHOTO SAMPLES PRIOR TO PURCHASE.
6. PROVIDE 3" DEPTH SHREDDED HARDWOOD MULCH AROUND ALL STAND-ALONE TREES TO A MIN. 3-FOOT PERIMETER, AND IN ALL AREAS NOTED ON PLANS OVER GEOTEXTILE WEED CONTROL FABRIC. NO WEED CONTROL FABRIC IS REQUIRED IN GROUNDCOVER OR PERENNIAL AREAS. MULCHED LANDSCAPE BEDS SHALL HAVE A SPADED VERTICAL EDGE WHEN PERIMETER IS NOT CONCRETE CURB.
7. MULCHED LANDSCAPE BEDS SHALL HAVE A SPADED VERTICAL EDGE AT 4" DEPTH WHEN PERIMETER IS NOT CONCRETE SIDEWALK OR CURB.
8. REFER TO CONSTRUCTION SEQUENCE FOR NOTES REGARDING SITE RESTORATION.

PLANT SCHEDULE

	KEY	COMMON NAME
CANOPY TREES		
	AG	AUTUMN GOLD GINKGO
	RO	NORTHERN RED OAK
	SH	SKYLINE HONEYLOCUST
	SM	SIENNA GLEN MAPLE
	TE	TRIUMPH ELM
	EQ	EMERALD QUEEN MAPLE
	LG	GREENSPIRE LINDEN
EVERGREEN TREES		
	SJ	SKYHIGH JUNIPER
	AP	AUSTRIAN PINE
	SP	SCOTCH PINE
ORNAMENTAL TREES		
	PC	PRAIRIFIRE CRABAPPLE
	JP	JACK FLOWERING PEAR
	AC	AMUR CHOCKCHERRY
	BW	WHITESPIRE BIRCH TWIN
DECIDUOUS SHRUBS		
2'-4' SPREAD		
	GP	GOLDFINGER POTENTILLA
	GS	GLOW GIRL SPIREA
	AF	ARCTIC FIRE DOGWOOD
5'-7' SPREAD		
	RC	ROCK COTONEASTER
	SF	SHOW OFF FORSYTHIA
	UC	UPRIGHT RED CHOKEBERRY
	SN	SNOWMOUND SPIREA
7' + SPREAD		
	AS	AUTUMN BRILLIANCE SERVICEBERRY
	DB	DWARF-WINGED BURNING BUSH
	FS	FRAGRANT SUMAC
	BV	BLACKHAW VIBURNUM
EVERGREEN SHRUBS		
2'-4' SPREAD		
	JJ	DWARF JAPANESE GARDEN JUNIPER
5'-7' SPREAD		
	JA	ANDORRA JUNIPER
	DY	DWARF YEW (BREVIFOLIA)
7' + SPREAD		
	MP	DWARF MUGO PINE
	RW	WHITE CATAWBA RHODODENDRON
	TY	TAUNTON YEW
ORNAMENTAL GRASSES		
	BA	BLONDE AMBITION BLUE GRAMA GRASS
	SS	SHENANDOAH SWITCH GRASS
	PD	PRAIRIE DROPSEED
	BB	BIG BLUESTEM
	LB	LITTLE BLUESTEM

LANDSCAPE LEGEND

- SOD, REFER TO CONSTRUCTION NOTES FOR TYPE
- SHRUB BED WITH HARDWOOD MULCH, REFER TO CONSTRUCTION NOTES FOR TYPE
- TURF SEED, REFER TO CONSTRUCTION NOTES FOR TYPE
- DECOMPOSED GRANITE, REFER TO CONSTRUCTION NOTES FOR TYPE
- COBBLE, REFER TO CONSTRUCTION NOTES FOR TYPE
- SPADE CUT EDGER AT 4" DEPTH
- DECIDUOUS CANOPY TREE
- LARGE DECIDUOUS ORNAMENTAL TREE
- EVERGREEN
- DECIDUOUS SHRUBS
- EVERGREEN SHRUBS
- UPRIGHT EVERGREEN
- ORNAMENTAL GRASSES
- LANDSCAPE BOULDERS

TO OBTAIN LOCATION OF PARTICIPANTS' UNDERGROUND FACILITIES BEFORE YOU DIG IN WISCONSIN

CALL DIGGERS HOTLINE
1-800-242-8511
TOLL FREE

WIS. STATUTE 182.0175 (1974) REQUIRES MIN. OF 3 WORK DAYS NOTICE BEFORE YOU EXCAVATE

MARK	REVISION	DATE	BY
#	#	#	#
#	#	#	#
#	#	#	#
#	#	#	#

Engineer: BCA | Checked By: MLC | Scale: 1" = NOTED
Technician: BCA | Date: 01-07-2019 | Field Bk: | Pg:

118.1129.30

MADISON, WI

THE MEADOWLANDS - PHASE 11

LANDSCAPE PLAN

SNYDER & ASSOCIATES, INC.
5010 VOGES ROAD
MADISON, WISCONSIN 53718
608-838-0444 | www.snyder-associates.com

SNYDER & ASSOCIATES

118.1129.30

L2.3

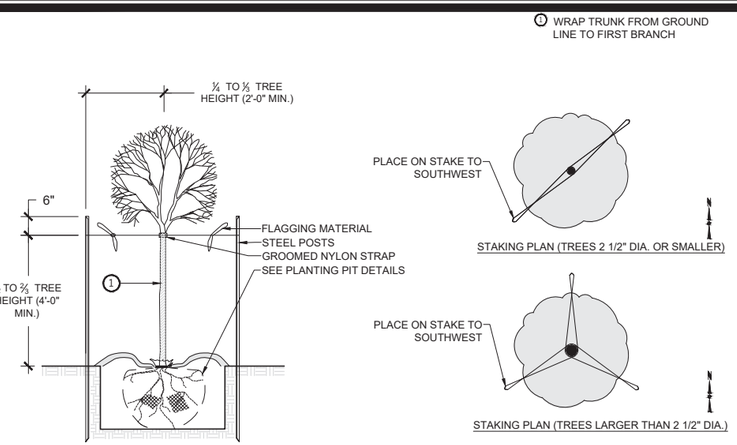

1 DECIDUOUS TREE STAKING

NO SCALE

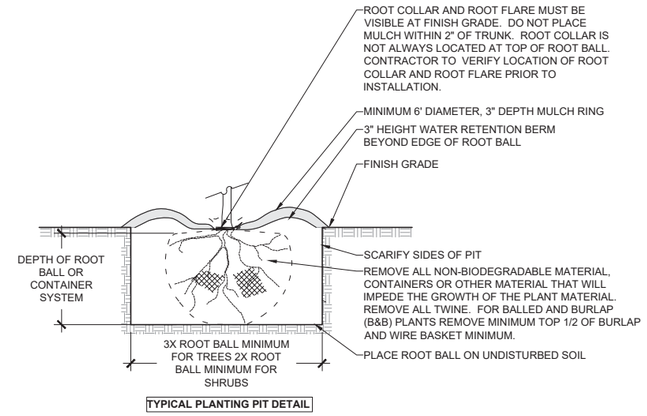

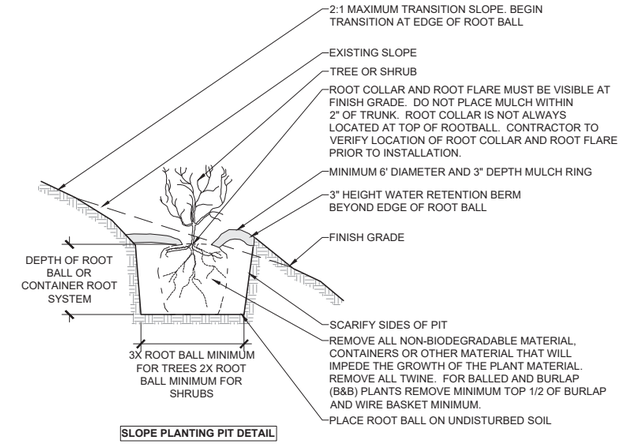

2 PLANTING PIT DETAILS

NO SCALE

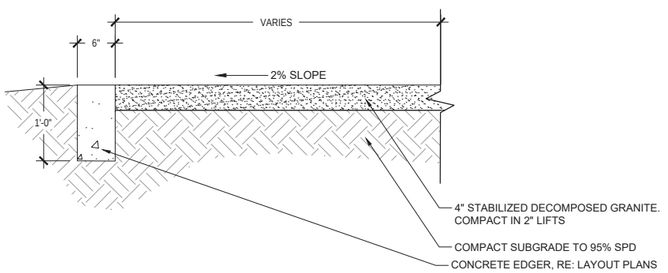

NOTES:
1. COMPACT WET.
2. USE A SMALL (4') RIDING ROLLER TO COMPACT CRUSHER FINES.
3. SLOPE AT 1-2% WITH GRADE WHERE TOPOGRAPHY DICTATES.

3 DECOMPOSED GRANITE

SCALE: 1" = 1'-0"

TO OBTAIN LOCATION OF PARTICIPANTS' UNDERGROUND FACILITIES BEFORE YOU DIG IN WISCONSIN

CALL DIGGERS HOTLINE
1-800-242-8511
TOLL FREE

WIS. STATUTE 182.0175 (1974) REQUIRES MIN. OF 3 WORK DAYS NOTICE BEFORE YOU EXCAVATE

MARK	REVISION	DATE	BY
#	#	#	#
#	#	#	#
#	#	#	#

Engineer: BCA | Checked By: MLC | Scale: 1" = | NOTED
Technician: BCA | Date: 01-07-2019 | Field Bk: | Pg:

118.1129.30

L3.0

MADISON, WI

THE MEADOWLANDS - PHASE 11

LANDSCAPE DETAILS

SNYDER & ASSOCIATES, INC.
5010 VOGES ROAD
MADISON, WISCONSIN 53718
608-838-0444 | www.snyder-associates.com

SNYDER & ASSOCIATES

118.1129.30

L3.0

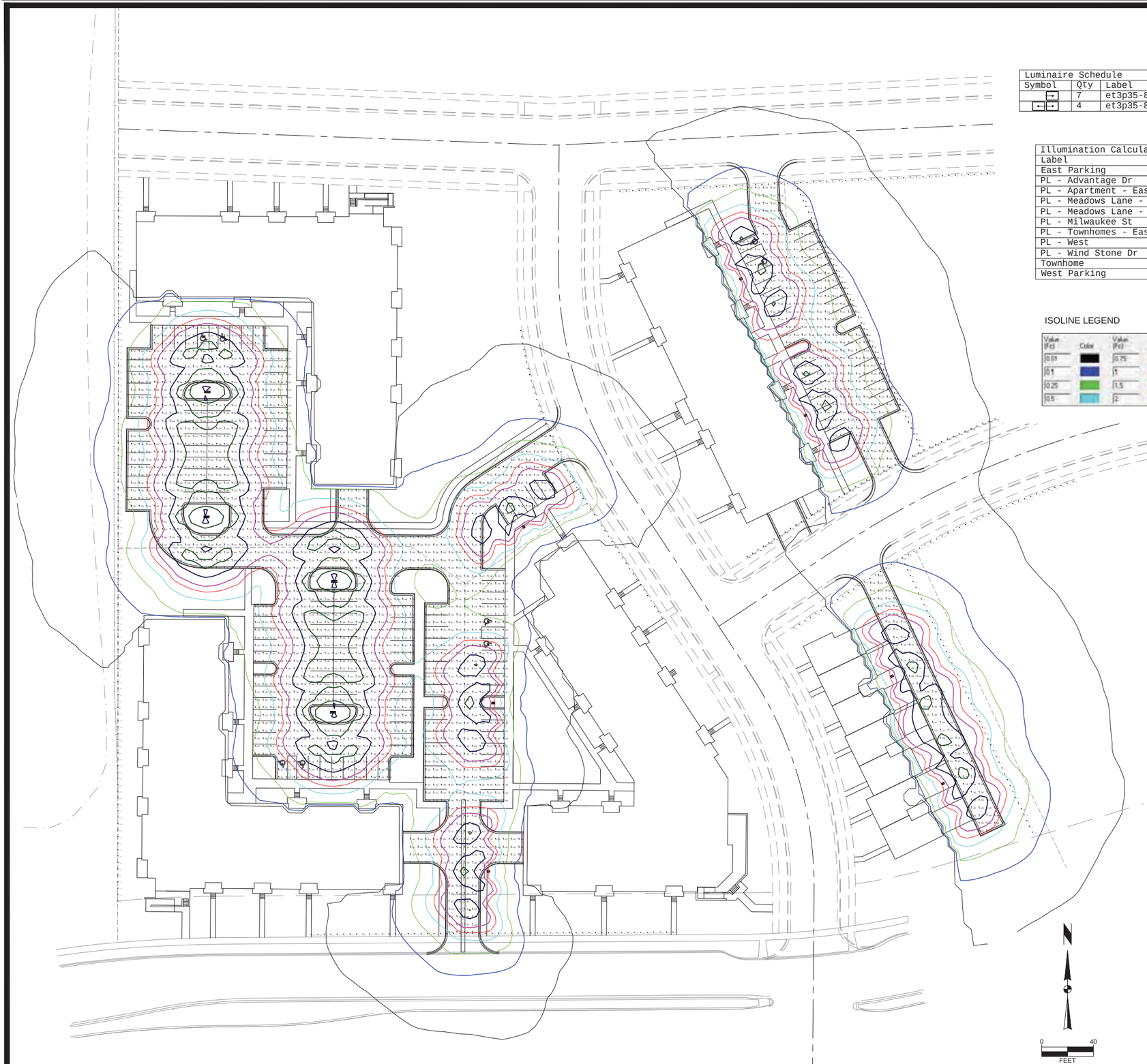

Luminaire Schedule						
Symbol	Qty	Label	Arrangement	Mntg Ht	LLF	Description
	7	et3p35-80l4k	SINGLE	20	0.850	ET3P35-80L4K - Kim Lighting
	4	et3p35-80l4k-Twin	BACK-BACK	20	0.850	ET3P35-80L4K - Kim Lighting

Illumination Calculation Summary						
Label	Units	Avg	Max	Min	Avg/Min	Max/Min
East Parking	Fc	0.77	2.27	0.12	6.42	18.92
PL - Advantage Dr	Fc	0.03	0.13	0.00	N.A.	N.A.
PL - Apartment - East	Fc	0.12	0.16	0.07	1.71	2.29
PL - Meadows Lane - North	Fc	0.06	0.24	0.00	N.A.	N.A.
PL - Meadows Lane - South	Fc	0.02	0.09	0.00	N.A.	N.A.
PL - Milwaukee St	Fc	0.11	0.49	0.00	N.A.	N.A.
PL - Townhomes - East	Fc	0.30	0.49	0.04	7.50	12.25
PL - West	Fc	0.04	0.14	0.00	N.A.	N.A.
PL - Wind Stone Dr	Fc	0.09	0.37	0.00	N.A.	N.A.
Townhome	Fc	1.40	2.31	0.14	10.00	16.50
West Parking	Fc	1.13	2.83	0.09	12.56	31.44

ISOLINE LEGEND

Value (Fc)	Color	Value (Fc)	Color	Value (Fc)	Color
0.01		0.75		3	
0.1		1		4	
0.25		1.5		5	
0.5		2		10	

MARK	REVISION	DATE	BY

Engineer: BCA
Checked By: MLC
Scale: 1" = NOTED
Technician: BCA
Date: 01-07-2019
Field Bk:
Pg:

118.1129.30

E 1.0

MADISON, WI

THE MEADOWLANDS - PHASE 11

PARKING LOT LIGHTING

SNYDER & ASSOCIATES, INC.
5010 VOGES ROAD
MADISON, WISCONSIN 53718
608-838-0444 | www.snyder-associates.com

SNYDER & ASSOCIATES

118.1129.30

E 1.0

City of Madison Fire Department

314 W Dayton Street, Madison, WI 53703-2506
Phone: 608-266-4420 • Fax: 608-267-1100 • E-mail: *fire@cityofmadison.com*

Project Address: 6810 Milwaukee Street

Contact Name & Phone #: Brian Arcand 608-838-0444 x224

FIRE APPARATUS ACCESS AND FIRE HYDRANT WORKSHEET

	Yes	No	N/A
1. Is the building completely protected by an NFPA 13 or 13R automatic fire sprinkler system?	☒	☐	☐
If non-sprinklered, fire lanes extend to within 150-feet of all portions of the exterior wall?	☐	☐	☒
If sprinklered, fire lanes are within 250-feet of all portions of the exterior wall?	☒	☐	☐
2. Is the fire lane constructed of concrete or asphalt, designed to support a minimum load of 85,000 lbs?	☒	☐	☐
a) Is the fire lane a minimum unobstructed width of at least 20-feet?	☒	☐	☐
b) Is the fire lane unobstructed with a vertical clearance of at least 13½-feet?	☒	☐	☐
c) Is the minimum inside turning radius of the fire lane at least 28-feet?	☒	☐	☐
d) Is the grade of the fire lane not more than a slope of 8%?	☒	☐	☐
e) Is the fire lane posted as fire lane? (Provide detail of signage.)	☐	☒	☐
f) Is a roll-able curb used as part of the fire lane? (Provide detail of curb.)	☐	☒	☐
g) Is part of a sidewalk used as part of the required fire lane? (Must support +85,000 lbs.)	☐	☒	☐
3. Is the fire lane obstructed by security gates or barricades? If yes:	☐	☒	☐
a) Is the gate a minimum of 20-feet clear opening?	☐	☐	☒
b) Is an approved means of emergency operations installed, key vault, padlock or key switch?	☐	☐	☒
4. Is the Fire lane dead-ended with a length greater than 150-feet?	☐	☒	☐
If yes, does the area for turning around fire apparatus comply with IFC D103?	☐	☐	☒
5. Is any portion of the building to be used for high-piled storage in accordance with IFC Chapter 3206.6 If yes, see IFC 3206.6 for further requirements.	☐	☒	☐
6. Is any part of the building <u>greater than 30-feet</u> above the grade plane? If yes, answer the following questions:	☒	☐	☐
a) Is the aerial apparatus fire lane parallel to one entire side of the building and covering at least 25% of the perimeter?	☒	☐	☐
b) Is the near edge of the aerial apparatus fire lane between 15' and 30' from the building?	☒	☐	☐
c) Are there any overhead power or utility lines located across the aerial apparatus fire lane?	☐	☒	☐
d) Are there any tree canopies expected to grow across the aerial fire lane? (Based on mature canopy width of tree species)	☐	☒	☐
e) Does the aerial apparatus fire lane have a minimum unobstructed width of 26-feet?	☒	☐	☐
f) Is the space between the aerial lane and the building free of trees exceeding 20' in heights?	☒	☐	☐
7. Are all portions of the required fire lanes within 500-feet of at least (2) hydrants? *Note: Distances shall be measured along the path of the hose lay as it comes off the fire apparatus.*	☒	☐	☐
a) Is the fire lane at least 26' wide for at least 20-feet on each side of the hydrants?	☒	☐	☐
b) Is there at least 40' between a hydrant and the building?	☒	☐	☐
c) Are the hydrant(s) setback no less than 5-feet nor more than 10-feet from the curb or edge of the street or fire lane?	☒	☐	☐
d) Are hydrants located in parking lot islands a minimum of 3½-feet from the hydrant to the curb?	☒	☐	☐
e) Are there no obstructions, including but not limited to: power poles, trees, bushes, fences, posts located, or grade changes exceeding 1½-feet, within 5-feet of a fire hydrant?	☒	☐	☐

Note: Hydrants shall be installed and in-service prior to combustible construction on the project site.

Attach an additional sheet if further explanation is required for any answers.

This worksheet is based on **MGO 34.503** and **IFC 2015 Edition Chapter 5 and Appendix D**; please see the codes for further information.

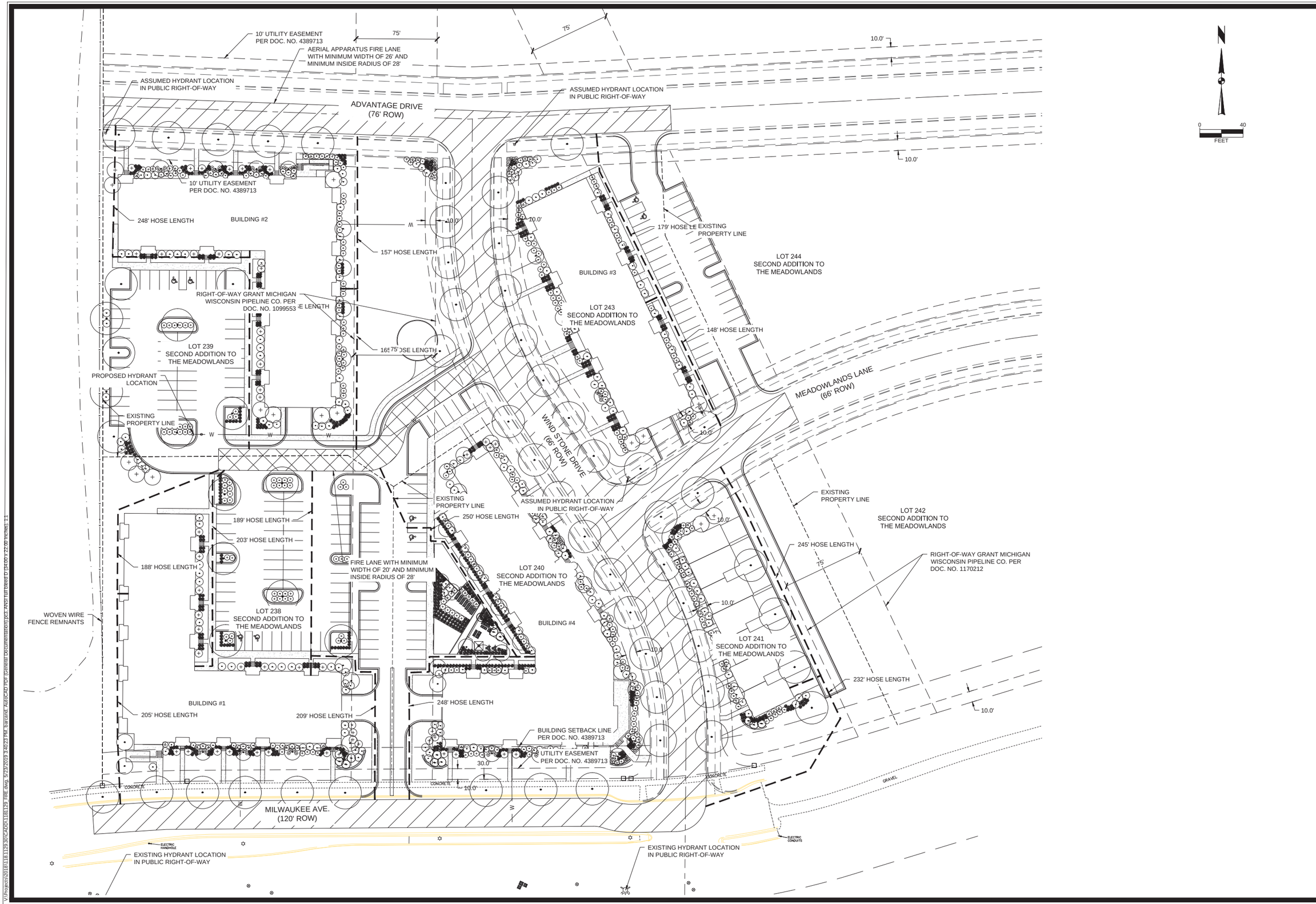

MARK	REVISION	DATE	BY
Engineer: BCA	Checked By: MLC	Scale: 1" =AS SHOWN	
Technician: BCA	Date: 05-22-2019	T-R-S:	
Surveyed By:	Date:		
Project No: 118.1129.30			

EXHIBIT

MADISON, WI

5010 VOGES ROAD
MADISON, WI 53718
608-838-0444 | www.snyder-associates.com

THE MEADOWLANDS - PHASE 11

FIRE ACCESS PLAN

SNYDER & ASSOCIATES, INC.

SNYDER & ASSOCIATES

118.1129.30

EXHIBIT

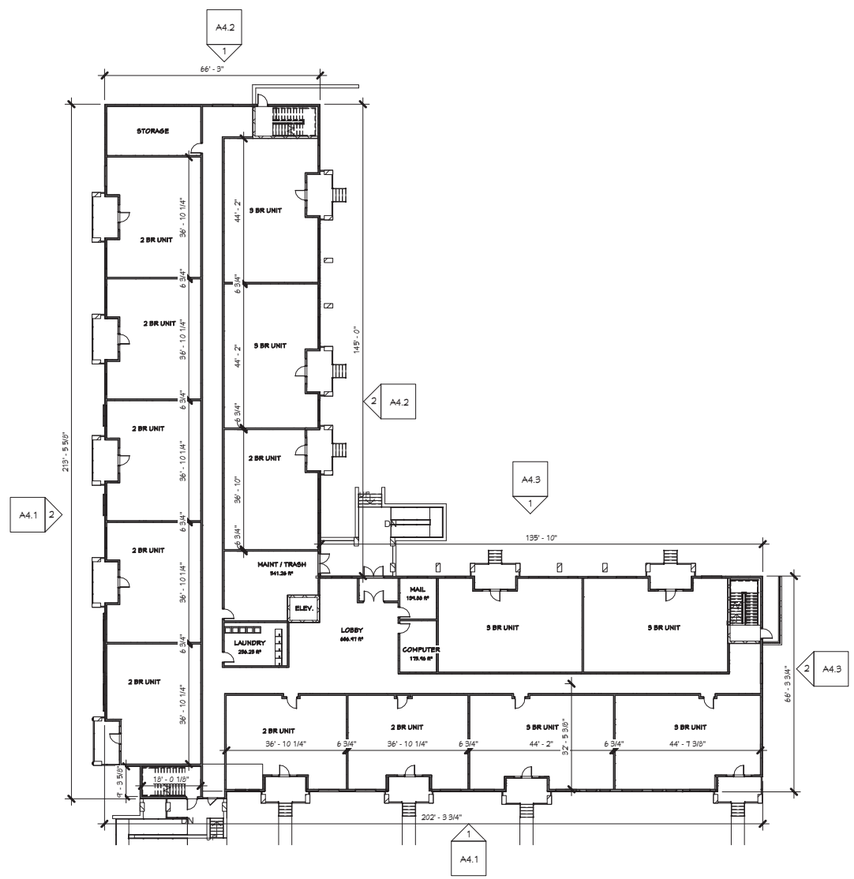

BLDG 1 - MAIN LEVEL PLAN

3/64" = 1'-0"

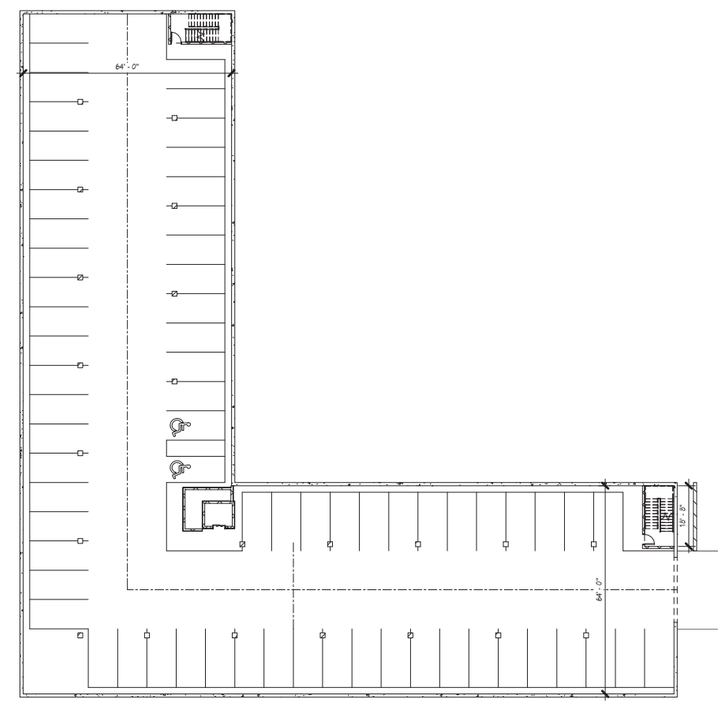

BLDG 1 - PARKING LEVEL PLAN

3/64" = 1'-0"

HOOKER | DE JONG
Architects & Engineers
316 Morris Avenue
Studio Suite 410
Muskegon, MI 49440
P 231 | 722 | 3407
F 231 | 722 | 2589

MULTI-FAMILY HOUSING
THE MEADOWLANDS
MADISON, WI

KGC HOUSING DEVELOPMENT

Project Number	4-1125

ISSUANCE

No.	Date	Description
1	2019.05.28	SITE PLAN REVIEW

NOT FOR CONSTRUCTION

Copyright © 2019 HDJ Inc. All Rights Reserved

OVERALL FLOOR PLANS - BLDG 1 (BLDG 2 SIM.)

A0.1

5/28/2019 2:07:11 PM
C:\1-Revit Projects\4-1125 - ARCH_erlcm(Recovery).rvt

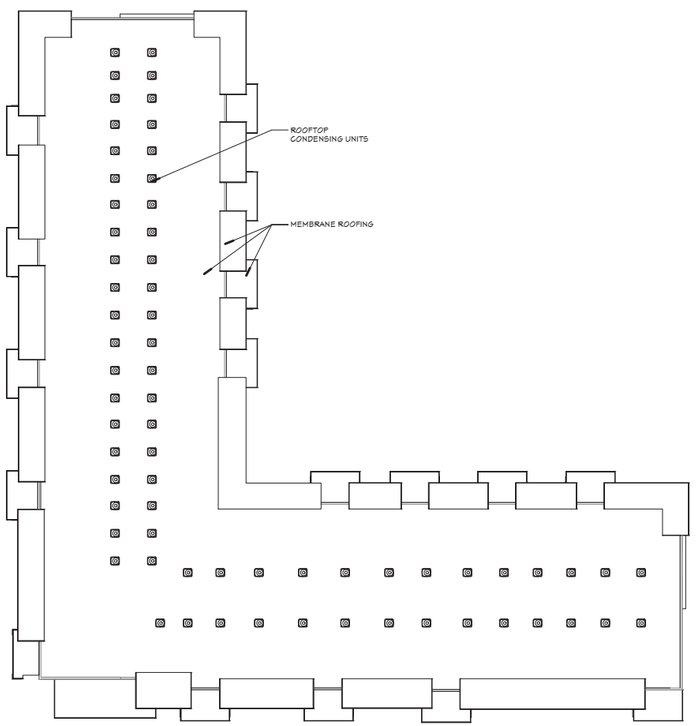

ROOF PLAN

3/64" = 1'-0"

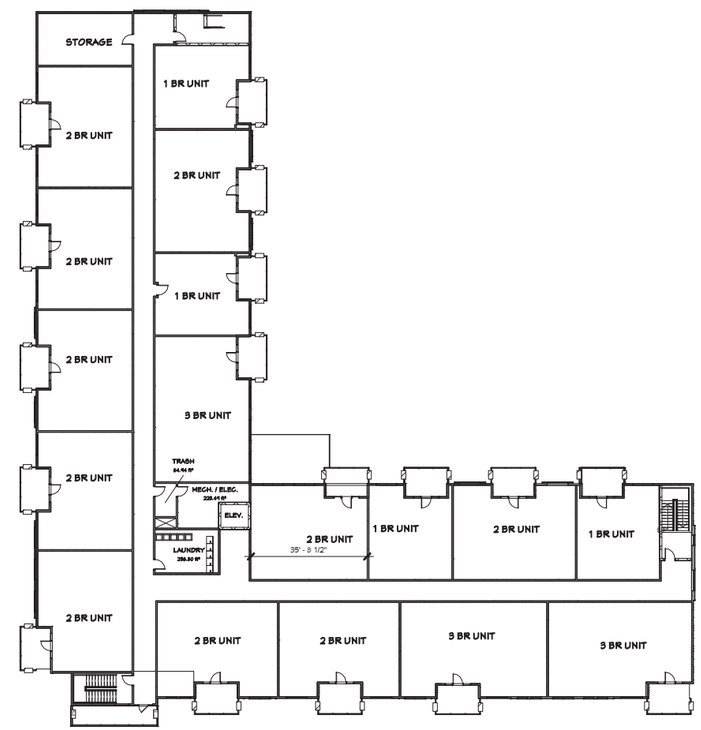

BLDG 1 - SECOND FLOOR PLAN

3/64" = 1'-0"

(THIRD AND FOURTH SIM.)

HOOKER | DE JONG
Architects & Engineers
316 Morris Avenue
Studio Suite 410
Muskegon, MI 49440
P 231 | 722 | 3407
F 231 | 722 | 2589

MULTI-FAMILY HOUSING
THE MEADOWLANDS
MADISON, WI

KGC HOUSING DEVELOPMENT

Project Number	4-1125

ISSUANCE

No.	Date	Description
1	2019.05.28	SITE PLAN REVIEW

NOT FOR CONSTRUCTION

Copyright © 2019 HDJ Inc. All Rights Reserved

OVERALL FLOOR PLANS - BLDG 1 (BLDG 2 SIM.)

A0.2

5/28/2019 2:07:14 PM
C:\1-Revit Projects\4-1125 - ARCH_ericm(Recovery).rvt

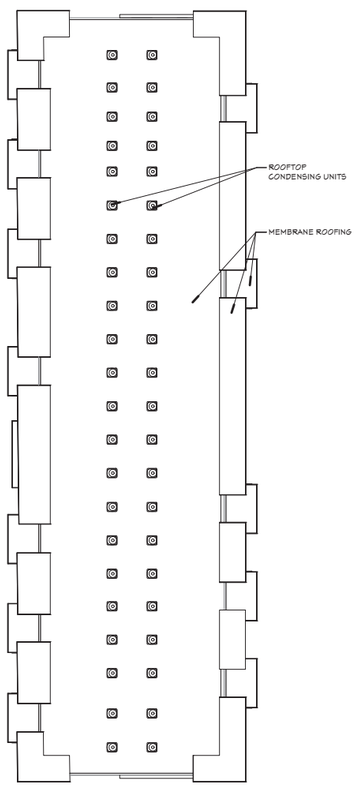

BLDG 3 - ROOF PLAN

3/64" = 1'-0"

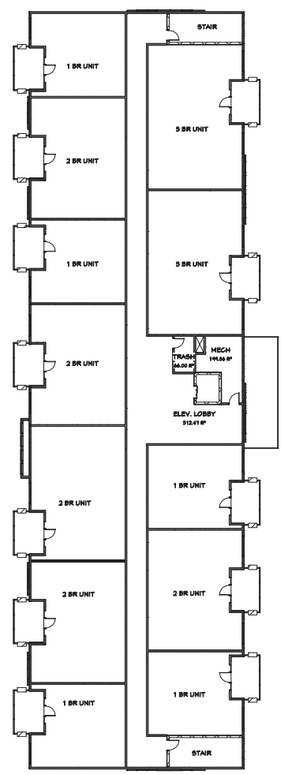

BLDG 3 - SECOND FLOOR

3/64" = 1'-0"

(THIRD AND FOURTH FLOOR SIM.)

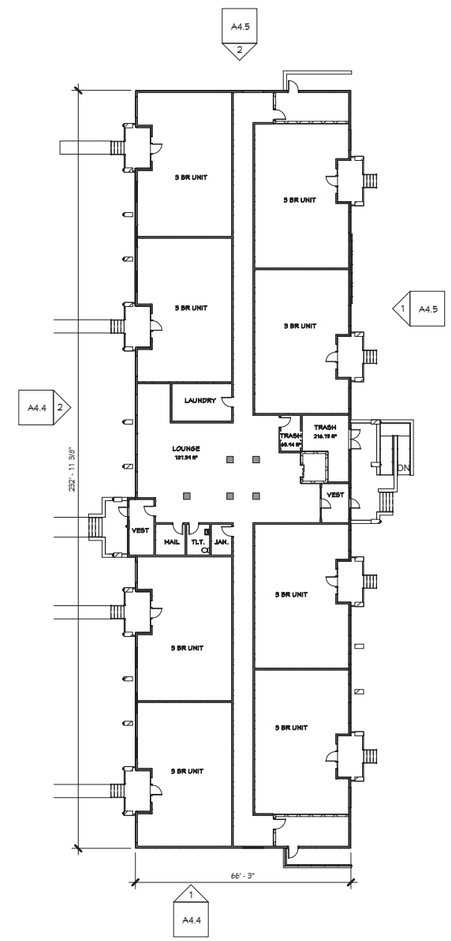

BLDG 3 - FIRST FLOOR

3/64" = 1'-0"

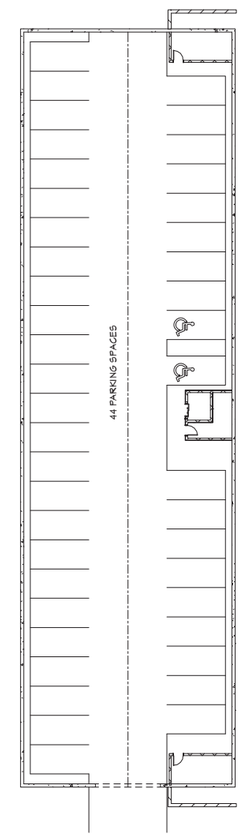

BLDG 3 - PARKING LEVEL

3/64" = 1'-0"

HOOKER | DE JONG
Architects & Engineers
316 Morris Avenue
Studio Suite 410
Muskegon, MI 49440
P 231 | 722 | 3407
F 231 | 722 | 2589

MULTI-FAMILY HOUSING
THE MEADOWLANDS
MADISON, WI

KGC HOUSING DEVELOPMENT

Project Number	4-1125

ISSUANCE

No.	Date	Description
1	2019.05.28	SITE PLAN REVIEW

NOT FOR CONSTRUCTION

Copyright © 2019 HDJ Inc. All Rights Reserved

OVERALL FLOOR PLANS - BLDG 3

A0.3

5/28/2019 2:07:18 PM
C:\1-Revit Projects\4-1125 - ARCH_ericm(Recovery).rvt

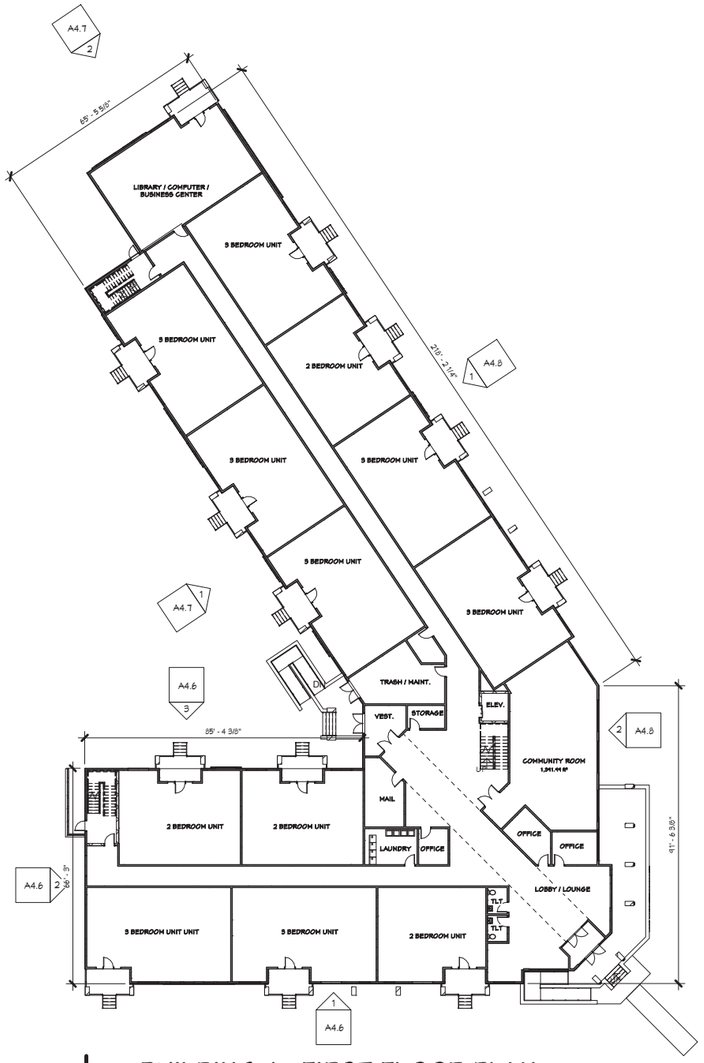

BUILDING 4 - FIRST FLOOR PLAN

3/64" = 1'-0"

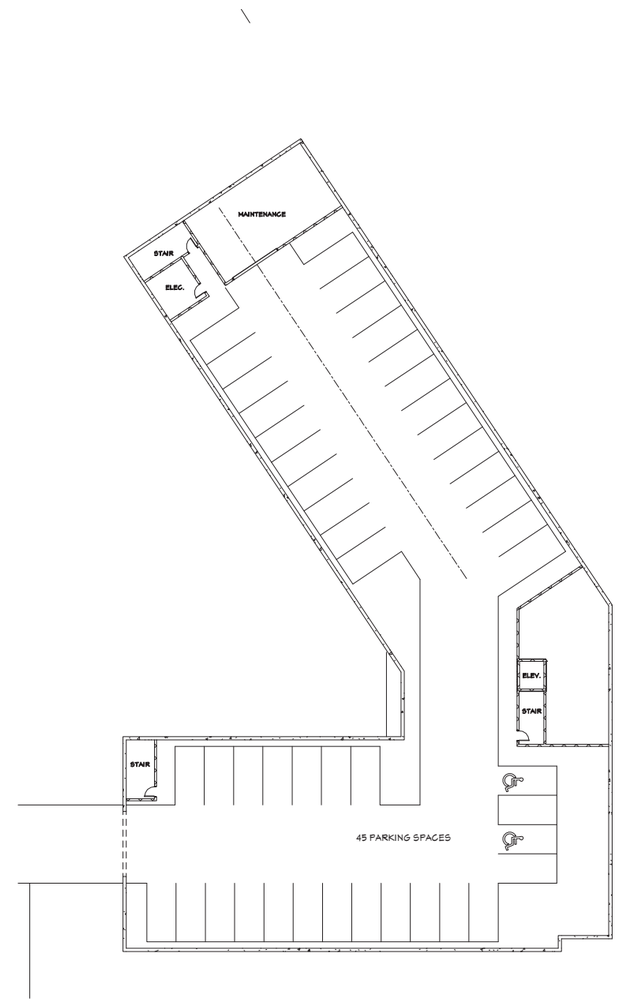

BUILDING 4 - PARKING LEVEL

3/64" = 1'-0"

HOOKER | DE JONG
Architects & Engineers
316 Morris Avenue
Studio Suite 410
Muskegon, MI 49440
P 231 | 722 | 3407
F 231 | 722 | 2589

MULTI-FAMILY HOUSING
THE MEADOWLANDS
MADISON, WI

KGC HOUSING DEVELOPMENT

Project Number **4-1125**

ISSUANCE

No.	Date	Description
1	2019.05.28	SITE PLAN REVIEW

NOT FOR CONSTRUCTION

Copyright © 2019 HDJ Inc. All Rights Reserved

OVERALL FLOOR PLANS - BLDG 4

A0.4

5/28/2019 2:07:22 PM
C:\1-Revit Projects\4-1125 - ARCH_erlcmk(Recovery).rvt

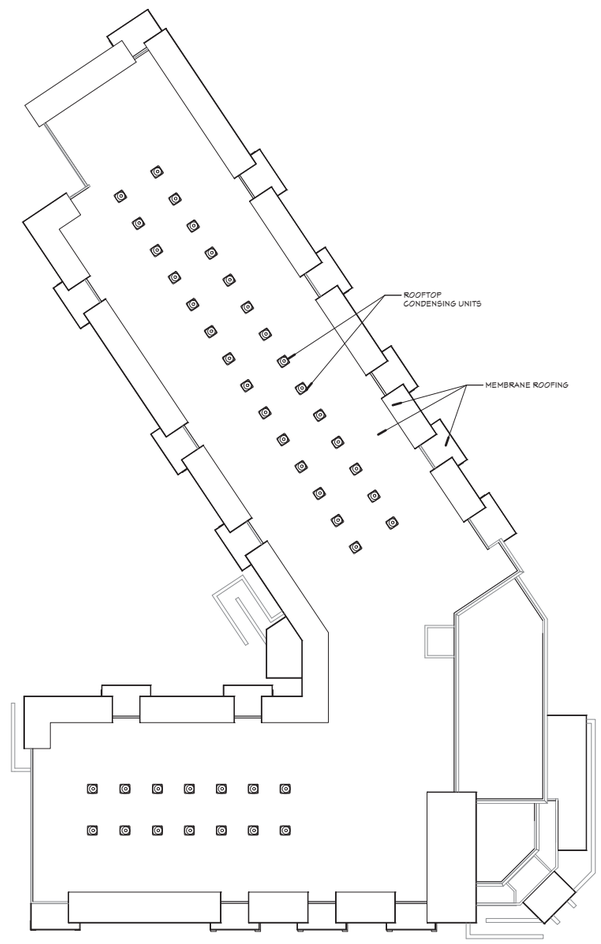

ROOF PLAN

3/64" = 1'-0"

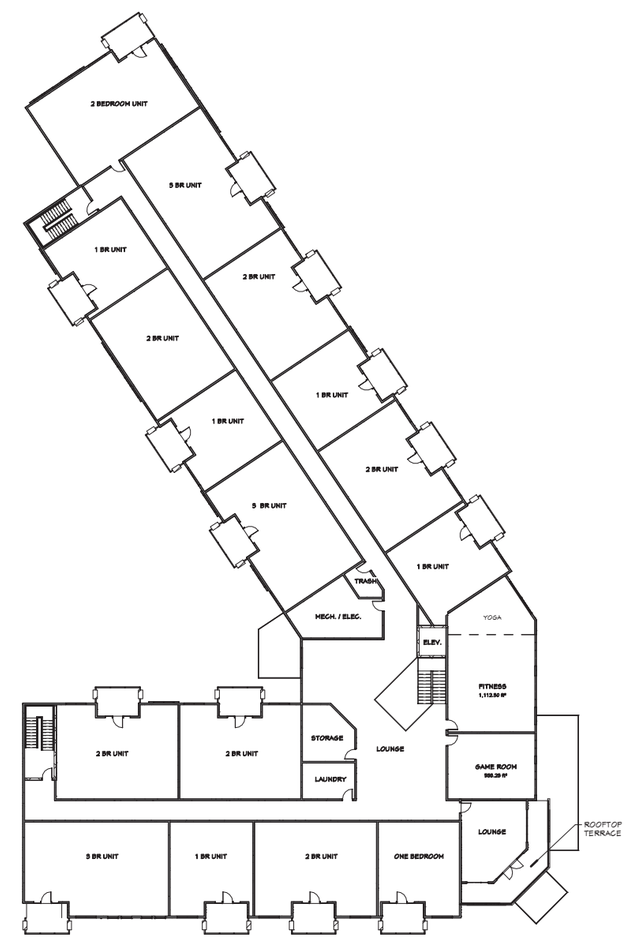

BUILDING 4 - SECOND FLOOR PLAN

3/64" = 1'-0"

(THIRD FLOOR SIM.)

HOOKER | DE JONG
Architects & Engineers
316 Morris Avenue
Studio Suite 410
Muskegon, MI 49440
P 231 | 722 | 3407
F 231 | 722 | 2589

MULTI-FAMILY HOUSING
THE MEADOWLANDS
MADISON, WI

KGC HOUSING DEVELOPMENT

Project Number	4-1125

ISSUANCE

No.	Date	Description
1	2019.05.28	SITE PLAN REVIEW

NOT FOR CONSTRUCTION

Copyright © 2019 HDJ Inc. All Rights Reserved

OVERALL FLOOR PLANS - BLDG 4

A0.5

5/28/2019 2:07:26 PM
C:\1-Revit Projects\4-1125 - ARCH_enc\(Recovery).rvt

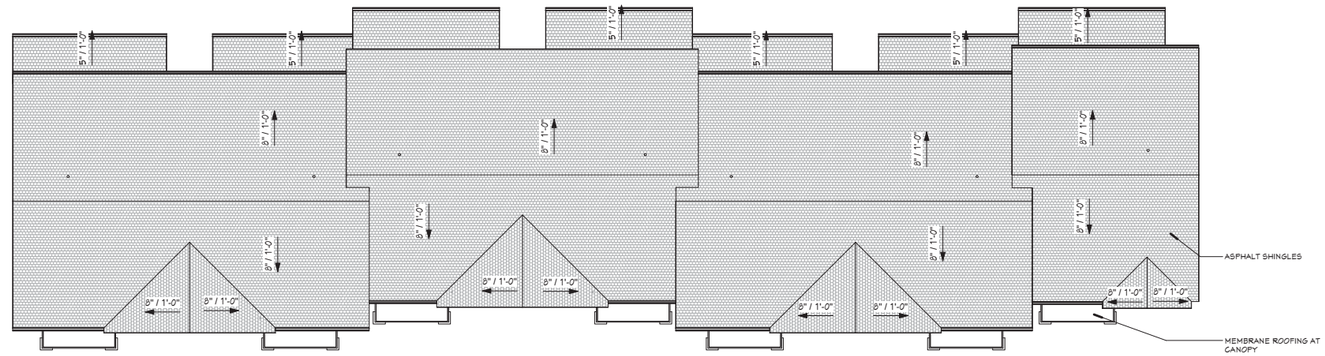

3 A0.6 OVERALL ROOF PLAN - BLDG 5

3/32" = 1'-0"

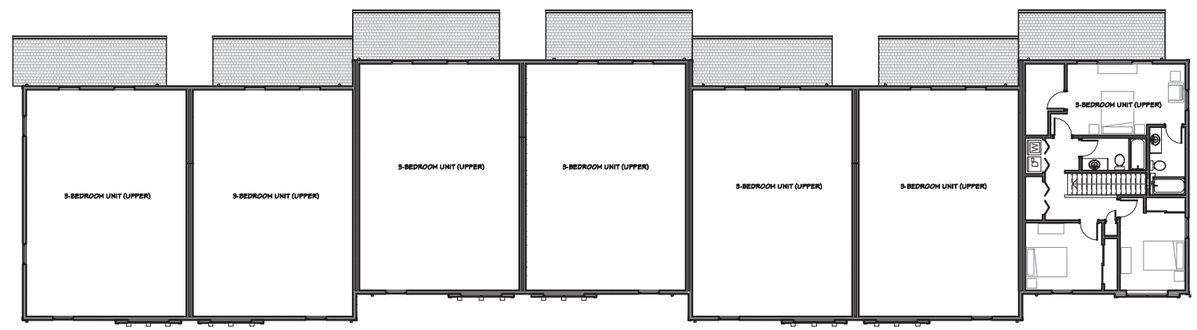

2 A0.6 OVERALL SECOND FLOOR PLAN - BLDG 5

3/32" = 1'-0"

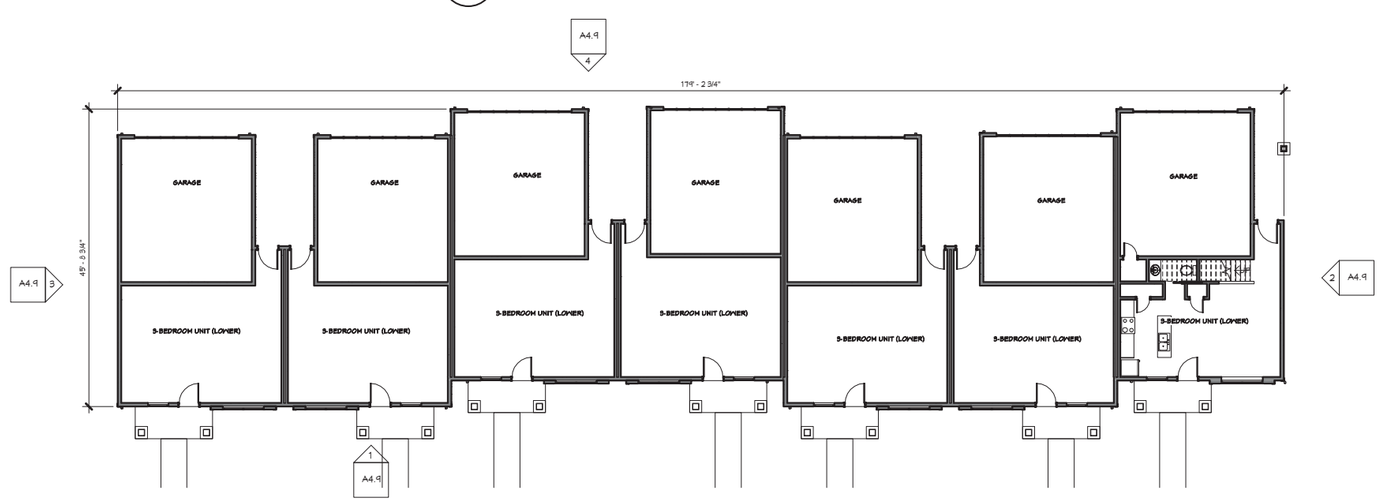

1 A0.6 OVERALL FIRST FLOOR PLAN - BLDG 5

3/32" = 1'-0"

HOOKER | DE JONG
Architects & Engineers
316 Morris Avenue
Studio Suite 410
Muskegon, MI 49440
P 231 | 722 | 3407
F 231 | 722 | 2589

MULTI-FAMILY HOUSING
THE MEADOWLANDS
MADISON, WI

KGC HOUSING DEVELOPMENT

Project Number	4-1125

ISSUANCE

No.	Date	Description
1	2019.05.28	SITE PLAN REVIEW

NOT FOR CONSTRUCTION

Copyright © 2019 HDJ Inc. All Rights Reserved

OVERALL FLOOR PLANS - BLDG 5

A0.6

5/28/2019 2:07:29 PM
C:\1-Revit Projects\4-1125 - ARCH_erlizm(Recovery).rvt

ELEVATION KEYNOTES

1. HORIZONTAL FIBER CEMENT SIDING - COLOR 1
2. HORIZONTAL FIBER CEMENT SIDING - COLOR 2
3. FIBER CEMENT PANEL
4. FIBER CEMENT TRIM
5. STONE VENEER
6. CAST STONE SILL
7. VINYL WINDOW WITH FIBER CEMENT TRIM
8. FIBERGLASS DOOR
9. BALCONY/ CANOPY COLUMN WITH STONE VENEER
10. BALCONY/ CANOPY COLUMN WITH FIBER CEMENT WRAP
11. FIBER CEMENT FASCIA
12. MECHANICAL UNIT
13. DECORATIVE LIGHT FIXTURE
14. COMPOSITE CORBEL
15. BALCONY STRUCTURE WITH FIBER CEMENT TRIM
16. PAINTED METAL GUARDRAIL
17. ALUMINUM STOREFRONT SYSTEM
18. BUILDING SIGNAGE
19. ALUMINUM GUTTER AND DOWNSPOUTS
20. MECHANICAL PENETRATION
21. ASPHALT SHINGLES
22. INSULATED GARAGE DOOR

GENERAL ELEVATION NOTES

1. MECHANICAL PENETRATIONS AT 3 AND 4 STORY BUILDINGS TO EXTEND THROUGH ROOF, BELOW PARAPET LEVEL

2 A4.1 BUILDING 1 - WEST ELEVATION
1/8" = 1'-0"

1 A4.1 BUILDING 1 - SOUTH ELEVATION
1/8" = 1'-0"

HOOKER | DE JONG
Architects & Engineers
316 Morris Avenue
Studio Suite 410
Muskegon, MI 49440
P 231 | 722 | 3407
F 231 | 722 | 2589

MULTI-FAMILY HOUSING
THE MEADOWLANDS
MADISON, WI

KGC HOUSING DEVELOPMENT

Project Number	4-1125

ISSUANCE

No.	Date	Description
1	2019.05.28	SITE PLAN REVIEW

NOT FOR CONSTRUCTION

Copyright © 2019 HDJ Inc. All Rights Reserved

EXTERIOR ELEVATIONS

A4.1

5/28/2019 2:07:37 PM
C:\1-Revit Projects\4-1125 - ARCH_erickr(Recovery).rvt

2 / A4.2 BUILDING 1 - EAST ELEVATION

1/8" = 1'-0"

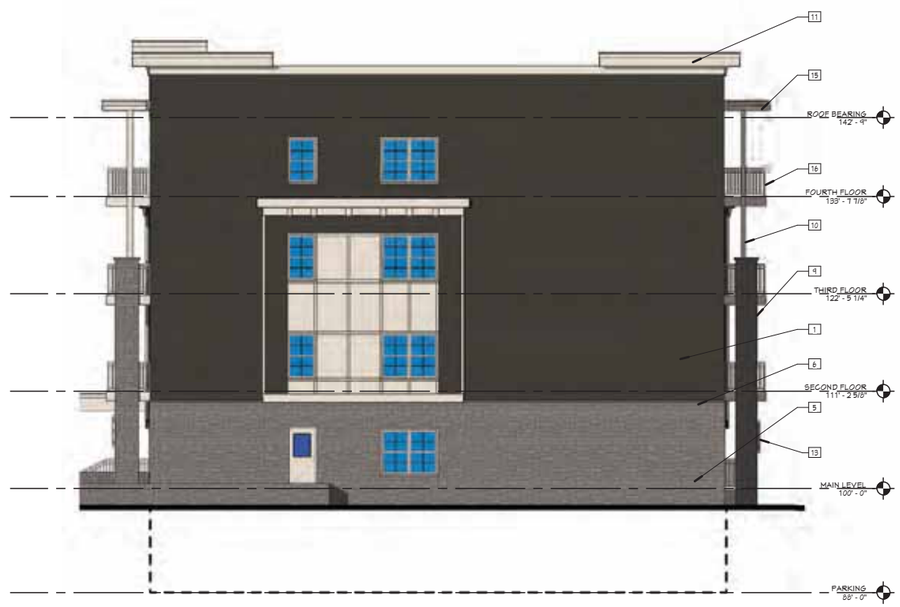

1 / A4.2 BUILDING 1 - NORTH ELEVATION

1/8" = 1'-0"

ELEVATION KEYNOTES

1. HORIZONTAL FIBER CEMENT SIDING - COLOR 1
2. HORIZONTAL FIBER CEMENT SIDING - COLOR 2
3. FIBER CEMENT PANEL
4. FIBER CEMENT TRIM
5. STONE VENEER
6. CAST STONE SILL
7. VINYL WINDOW WITH FIBER CEMENT TRIM
8. FIBERGLASS DOOR
9. BALCONY/ CANOPY COLUMN WITH STONE VENEER
10. BALCONY/ CANOPY COLUMN WITH FIBER CEMENT WRAP
11. FIBER CEMENT FASCIA
12. MECHANICAL UNIT
13. DECORATIVE LIGHT FIXTURE
14. COMPOSITE CORBEL
15. BALCONY STRUCTURE WITH FIBER CEMENT TRIM
16. PAINTED METAL GUARDRAIL
17. ALUMINUM STOREFRONT SYSTEM
18. BUILDING SIGNAGE
19. ALUMINUM GUTTER AND DOWNSPOUTS
20. MECHANICAL PENETRATION
21. ASPHALT SHINGLES
22. INSULATED GARAGE DOOR

GENERAL ELEVATION NOTES

1. MECHANICAL PENETRATIONS AT 3 AND 4 STORY BUILDINGS TO EXTEND THROUGH ROOF, BELOW PARAPET LEVEL

HOOKER | DE JONG
Architects & Engineers
316 Morris Avenue
Studio Suite 410
Muskegon, MI 49440
P 231 | 722 | 3407
F 231 | 722 | 2589

MULTI-FAMILY HOUSING
THE MEADOWLANDS
MADISON, WI

KGC HOUSING DEVELOPMENT

Project Number **4-1125**

ISSUANCE

No.	Date	Description
1	2019.05.28	SITE PLAN REVIEW

NOT FOR CONSTRUCTION

Copyright © 2019 HDJ Inc. All Rights Reserved

EXTERIOR ELEVATIONS

A4.2

5/28/2019 2:07:44 PM
C:\1-Revit Projects\4-1125 - ARCH_ericm(Recovery).rvt

ELEVATION KEYNOTES

1. HORIZONTAL FIBER CEMENT SIDING - COLOR 1
2. HORIZONTAL FIBER CEMENT SIDING - COLOR 2
3. FIBER CEMENT PANEL
4. FIBER CEMENT TRIM
5. STONE VENEER
6. CAST STONE SILL
7. VINYL WINDOW WITH FIBER CEMENT TRIM
8. FIBERGLASS DOOR
9. BALCONY/ CANOPY COLUMN WITH STONE VENEER
10. BALCONY/ CANOPY COLUMN WITH FIBER CEMENT WRAP
11. FIBER CEMENT FASCIA
12. MECHANICAL UNIT
13. DECORATIVE LIGHT FIXTURE
14. COMPOSITE CORBEL
15. BALCONY STRUCTURE WITH FIBER CEMENT TRIM
16. PAINTED METAL GUARDRAIL
17. ALUMINUM STOREFRONT SYSTEM
18. BUILDING SIGNAGE
19. ALUMINUM GUTTER AND DOWNSPOUTS
20. MECHANICAL PENETRATION
21. ASPHALT SHINGLES
22. INSULATED GARAGE DOOR

GENERAL ELEVATION NOTES

1. MECHANICAL PENETRATIONS AT 3 AND 4 STORY BUILDINGS TO EXTEND THROUGH ROOF, BELOW PARAPET LEVEL

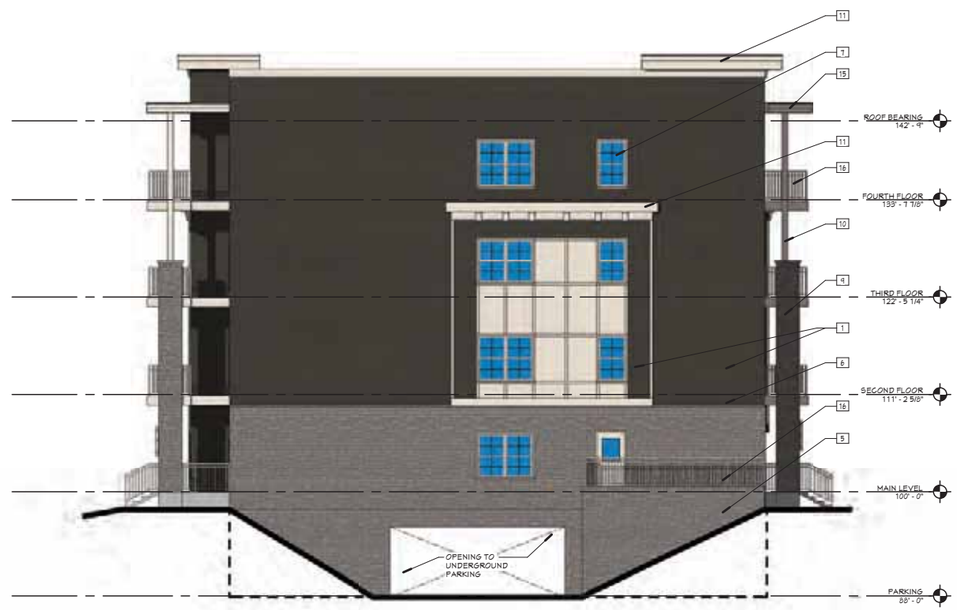

2 / A4.3 BUILDING 1 - EAST ELEVATION

1/8" = 1'-0"

1 / A4.3 BUILDING 1 - NORTH ELEVATION

1/8" = 1'-0"

HOOKER | DE JONG
Architects & Engineers
316 Morris Avenue
Studio Suite 410
Muskegon, MI 49440
P 231 | 722 | 3407
F 231 | 722 | 2589

MULTI-FAMILY HOUSING
THE MEADOWLANDS
MADISON, WI

KGC HOUSING DEVELOPMENT

Project Number	4-1125

ISSUANCE

No.	Date	Description
1	2019.05.28	SITE PLAN REVIEW

NOT FOR CONSTRUCTION

Copyright © 2019 HDJ Inc. All Rights Reserved

EXTERIOR ELEVATIONS

A4.3

5/28/2019 2:07:50 PM
C:\1-Revit Projects\4-1125 - ARCH_ericm(Recovery).rvt

ELEVATION KEYNOTES

1. HORIZONTAL FIBER CEMENT SIDING - COLOR 1
2. HORIZONTAL FIBER CEMENT SIDING - COLOR 2
3. FIBER CEMENT PANEL
4. FIBER CEMENT TRIM
5. STONE VENEER
6. CAST STONE SILL
7. VINYL WINDOW WITH FIBER CEMENT TRIM
8. FIBERGLASS DOOR
9. BALCONY/ CANOPY COLUMN WITH STONE VENEER
10. BALCONY/ CANOPY COLUMN WITH FIBER CEMENT WRAP
11. FIBER CEMENT FASCIA
12. MECHANICAL UNIT
13. DECORATIVE LIGHT FIXTURE
14. COMPOSITE CORBEL
15. BALCONY STRUCTURE WITH FIBER CEMENT TRIM
16. PAINTED METAL GUARDRAIL
17. ALUMINUM STOREFRONT SYSTEM
18. BUILDING SIGNAGE
19. ALUMINUM GUTTER AND DOWNSPOUTS
20. MECHANICAL PENETRATION
21. ASPHALT SHINGLES
22. INSULATED GARAGE DOOR

GENERAL ELEVATION NOTES

1. MECHANICAL PENETRATIONS AT 3 AND 4 STORY BUILDINGS TO EXTEND THROUGH ROOF, BELOW PARAPET LEVEL

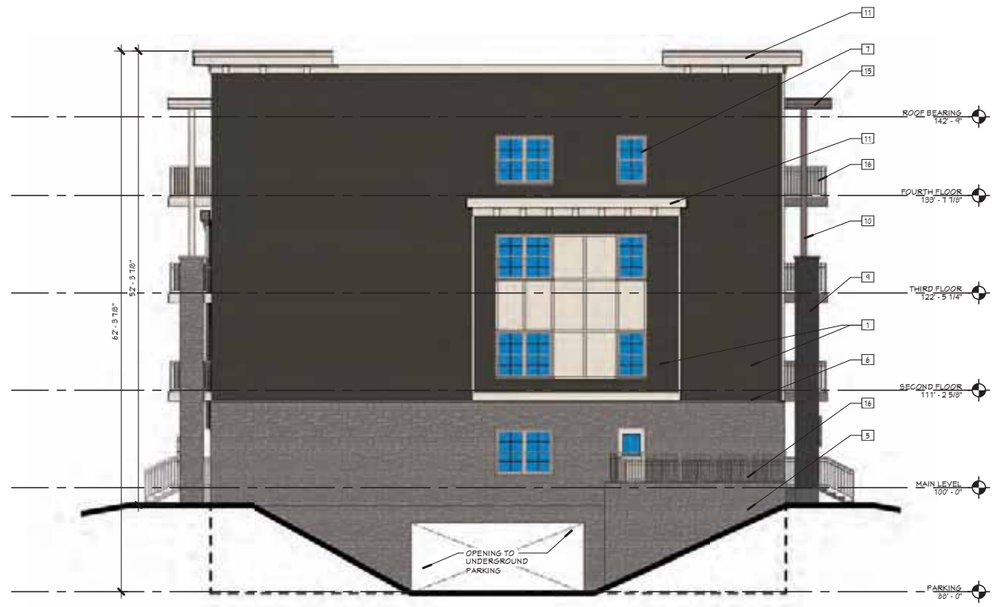

1 / A4.4 BUILDING 3 - SOUTH ELEVATION

1/8" = 1'-0"

2 / A4.4 BUILDING 3 - WEST ELEVATION

1/8" = 1'-0"

HOOKER | DE JONG
Architects & Engineers
316 Morris Avenue
Studio Suite 410
Muskegon, MI 49440
P 231 | 722 | 3407
F 231 | 722 | 2589

MULTI-FAMILY HOUSING
THE MEADOWLANDS
MADISON, WI

KGC HOUSING DEVELOPMENT

Project Number	4-1125

ISSUANCE

No.	Date	Description
1	2019.05.28	SITE PLAN REVIEW

NOT FOR CONSTRUCTION

Copyright © 2019 HDJ Inc. All Rights Reserved

EXTERIOR ELEVATIONS

A4.4

5/28/2019 2:07:56 PM
C:\1-Revit Projects\4-1125 - ARCH_encr(Recovery).rvt

ELEVATION KEYNOTES

1. HORIZONTAL FIBER CEMENT SIDING - COLOR 1
2. HORIZONTAL FIBER CEMENT SIDING - COLOR 2
3. FIBER CEMENT PANEL
4. FIBER CEMENT TRIM
5. STONE VENEER
6. CAST STONE SILL
7. VINYL WINDOW WITH FIBER CEMENT TRIM
8. FIBERGLASS DOOR
9. BALCONY/ CANOPY COLUMN WITH STONE VENEER
10. BALCONY/ CANOPY COLUMN WITH FIBER CEMENT WRAP
11. FIBER CEMENT FASCIA
12. MECHANICAL UNIT
13. DECORATIVE LIGHT FIXTURE
14. COMPOSITE CORBEL
15. BALCONY STRUCTURE WITH FIBER CEMENT TRIM
16. PAINTED METAL GUARDRAIL
17. ALUMINUM STOREFRONT SYSTEM
18. BUILDING SIGNAGE
19. ALUMINUM GUTTER AND DOWNSPOUTS
20. MECHANICAL PENETRATION
21. ASPHALT SHINGLES
22. INSULATED GARAGE DOOR

GENERAL ELEVATION NOTES

1. MECHANICAL PENETRATIONS AT 3 AND 4 STORY BUILDINGS TO EXTEND THROUGH ROOF, BELOW PARAPET LEVEL

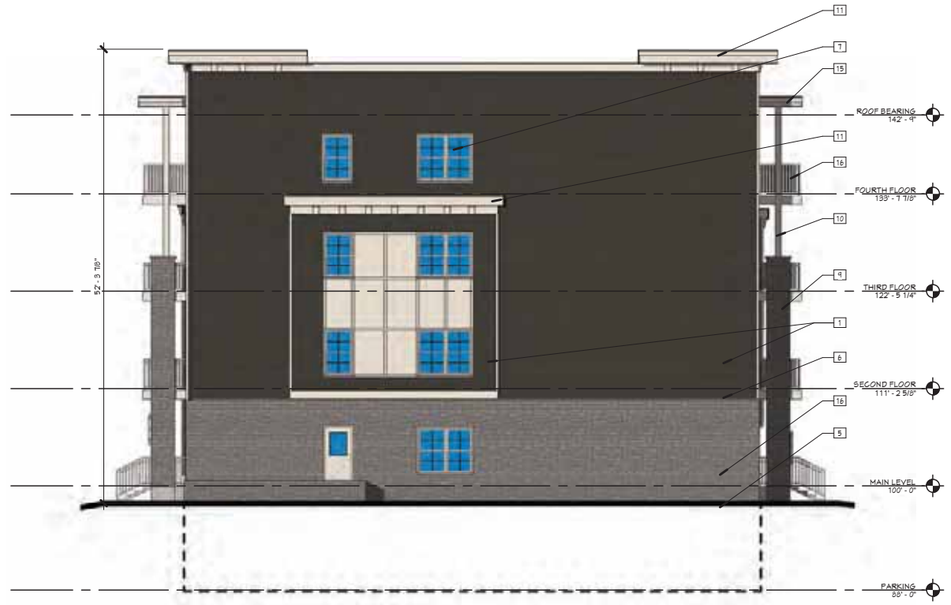

2 A4.5 BUILDING 3 - NORTH ELEVATION

1/8" = 1'-0"

1 A4.5 BUILDING 3 - EAST ELEVATION

1/8" = 1'-0"

HOOKER | DE JONG
Architects & Engineers
316 Morris Avenue
Studio Suite 410
Muskegon, MI 49440
P 231 | 722 | 3407
F 231 | 722 | 2589

MULTI-FAMILY HOUSING
THE MEADOWLANDS
MADISON, WI

KGC HOUSING DEVELOPMENT

Project Number	4-1125

ISSUANCE

No.	Date	Description
1	2019.05.28	SITE PLAN REVIEW

NOT FOR CONSTRUCTION

Copyright © 2019 HDJ Inc. All Rights Reserved

EXTERIOR ELEVATIONS

A4.5

5/28/2019 2:08:01 PM
C:\1-Revit Projects\4-1125 - ARCH_ericmRecovery.rvt

3 A4.6 BUILDING 4 - NORTH ELEVATION

1/8" = 1'-0"

2 A4.6 BUILDING 4 - WEST ELEVATION

1/8" = 1'-0"

1 A4.6 BUILDING 4 - SOUTH ELEVATION

1/8" = 1'-0"

ELEVATION KEYNOTES

1. HORIZONTAL FIBER CEMENT SIDING - COLOR 1
2. HORIZONTAL FIBER CEMENT SIDING - COLOR 2
3. FIBER CEMENT PANEL
4. FIBER CEMENT TRIM
5. STONE VENEER
6. CAST STONE SILL
7. VINYL WINDOW WITH FIBER CEMENT TRIM
8. FIBERGLASS DOOR
9. BALCONY/ CANOPY COLUMN WITH STONE VENEER
10. BALCONY/ CANOPY COLUMN WITH FIBER CEMENT WRAP
11. FIBER CEMENT FASCIA
12. MECHANICAL UNIT
13. DECORATIVE LIGHT FIXTURE
14. COMPOSITE CORBEL
15. BALCONY STRUCTURE WITH FIBER CEMENT TRIM
16. PAINTED METAL GUARDRAIL
17. ALUMINUM STOREFRONT SYSTEM
18. BUILDING SIGNAGE
19. ALUMINUM GUTTER AND DOWNSPOUTS
20. MECHANICAL PENETRATION
21. ASPHALT SHINGLES
22. INSULATED GARAGE DOOR

GENERAL ELEVATION NOTES

1. MECHANICAL PENETRATIONS AT 3 AND 4 STORY BUILDINGS TO EXTEND THROUGH ROOF, BELOW PARAPET LEVEL

HOOKER | DE JONG
Architects & Engineers
316 Morris Avenue
Studio Suite 410
Muskegon, MI 49440
P 231 | 722 | 3407
F 231 | 722 | 2589

MULTI-FAMILY HOUSING
THE MEADOWLANDS
MADISON, WI

KGC HOUSING DEVELOPMENT

Project Number	4-1125

ISSUANCE

No.	Date	Description
1	2019.05.28	SITE PLAN REVIEW

NOT FOR CONSTRUCTION

Copyright © 2019 HDJ Inc. All Rights Reserved

EXTERIOR ELEVATIONS

A4.6

5/28/2019 2:08:06 PM
C:\1-Revit Projects\4-1125 - ARCH_ericm(Recovery).rvt

ELEVATION KEYNOTES

1. HORIZONTAL FIBER CEMENT SIDING - COLOR 1
2. HORIZONTAL FIBER CEMENT SIDING - COLOR 2
3. FIBER CEMENT PANEL
4. FIBER CEMENT TRIM
5. STONE VENEER
6. CAST STONE SILL
7. VINYL WINDOW WITH FIBER CEMENT TRIM
8. FIBERGLASS DOOR
9. BALCONY CANOPY COLUMN WITH STONE VENEER
10. BALCONY/ CANOPY COLUMN WITH FIBER CEMENT WRAP
11. FIBER CEMENT FASCIA
12. MECHANICAL UNIT
13. DECORATIVE LIGHT FIXTURE
14. COMPOSITE CORBEL
15. BALCONY STRUCTURE WITH FIBER CEMENT TRIM
16. PAINTED METAL GUARDRAIL
17. ALUMINUM STOREFRONT SYSTEM
18. BUILDING SIGNAGE
19. ALUMINUM GUTTER AND DOWNSPOUTS
20. MECHANICAL PENETRATION
21. ASPHALT SHINGLES
22. INSULATED GARAGE DOOR

GENERAL ELEVATION NOTES

1. MECHANICAL PENETRATIONS AT 3 AND 4 STORY BUILDINGS TO EXTEND THROUGH ROOF, BELOW PARAPET LEVEL

2 / A4.7 BUILDING 4 - NORTHWEST ELEVATION

1/8" = 1'-0"

1 / A4.7 BUILDING 4 - SOUTHWEST ELEVATION

1/8" = 1'-0"

HOOKER | DE JONG
Architects & Engineers
316 Morris Avenue
Studio Suite 410
Muskegon, MI 49440
P 231 | 722 | 3407
F 231 | 722 | 2589

MULTI-FAMILY HOUSING
THE MEADOWLANDS
MADISON, WI

KGC HOUSING DEVELOPMENT

Project Number	4-1125

ISSUANCE

No.	Date	Description
1	2019.05.28	SITE PLAN REVIEW

NOT FOR CONSTRUCTION

Copyright © 2019 HDJ Inc. All Rights Reserved

EXTERIOR ELEVATIONS

A4.7

5/28/2019 2:08:11 PM
C:\1-Revit Projects\4-1125 - ARCH_ericm(Recovery).rvt

ELEVATION KEYNOTES

1. HORIZONTAL FIBER CEMENT SIDING - COLOR 1
2. HORIZONTAL FIBER CEMENT SIDING - COLOR 2
3. FIBER CEMENT PANEL
4. FIBER CEMENT TRIM
5. STONE VENEER
6. CAST STONE SILL
7. VINYL WINDOW WITH FIBER CEMENT TRIM
8. FIBERGLASS DOOR
9. BALCONY/ CANOPY COLUMN WITH STONE VENEER
10. BALCONY/ CANOPY COLUMN WITH FIBER CEMENT WRAP
11. FIBER CEMENT FASCIA
12. MECHANICAL UNIT
13. DECORATIVE LIGHT FIXTURE
14. COMPOSITE CORBEL
15. BALCONY STRUCTURE WITH FIBER CEMENT TRIM
16. PAINTED METAL GUARDRAIL
17. ALUMINUM STOREFRONT SYSTEM
18. BUILDING SIGNAGE
19. ALUMINUM GUTTER AND DOWNSPOUTS
20. MECHANICAL PENETRATION
21. ASPHALT SHINGLES
22. INSULATED GARAGE DOOR

GENERAL ELEVATION NOTES

1. MECHANICAL PENETRATIONS AT 3 AND 4 STORY BUILDINGS TO EXTEND THROUGH ROOF, BELOW PARAPET LEVEL

2 / A4.8 BUILDING 4 - EAST ELEVATION

1/8" = 1'-0"

1 / A4.8 BUILDING 4 - NORTHEAST ELEVATION

1/8" = 1'-0"

HOOKER | DE JONG
Architects & Engineers
316 Morris Avenue
Studio Suite 410
Muskegon, MI 49440
P 231 | 722 | 3407
F 231 | 722 | 2589

MULTI-FAMILY HOUSING
THE MEADOWLANDS
MADISON, WI

KGC HOUSING DEVELOPMENT

Project Number 4-1125

ISSUANCE

No.	Date	Description
1	2019.05.28	SITE PLAN REVIEW

NOT FOR CONSTRUCTION

Copyright © 2019 HDJ Inc. All Rights Reserved

EXTERIOR ELEVATIONS

A4.8

5/28/2019 2:08:16 PM
C:\1-Revit Projects\4-1125 - ARCH_ericm(Recovery).rvt

ELEVATION KEYNOTES

1. HORIZONTAL FIBER CEMENT SIDING - COLOR 1
2. HORIZONTAL FIBER CEMENT SIDING - COLOR 2
3. FIBER CEMENT PANEL
4. FIBER CEMENT TRIM
5. STONE VENEER
6. CAST STONE SILL
7. VINYL WINDOW WITH FIBER CEMENT TRIM
8. FIBERGLASS DOOR
9. BALCONY/ CANOPY COLUMN WITH STONE VENEER
10. BALCONY/ CANOPY COLUMN WITH FIBER CEMENT WRAP
11. FIBER CEMENT FASCIA
12. MECHANICAL UNIT
13. DECORATIVE LIGHT FIXTURE
14. COMPOSITE CORBEL
15. BALCONY STRUCTURE WITH FIBER CEMENT TRIM
16. PAINTED METAL GUARDRAIL
17. ALUMINUM STOREFRONT SYSTEM
18. BUILDING SIGNAGE
19. ALUMINUM GUTTER AND DOWNSPOUTS
20. MECHANICAL PENETRATION
21. ASPHALT SHINGLES
22. INSULATED GARAGE DOOR

GENERAL ELEVATION NOTES

1. MECHANICAL PENETRATIONS AT 3 AND 4 STORY BUILDINGS TO EXTEND THROUGH ROOF, BELOW PARAPET LEVEL

4 A4.9 BUILDING 5 - EAST ELEVATION
1/8" = 1'-0"

3 A4.9 BUILDING 5 - NORTH ELEVATION
1/8" = 1'-0"

2 A4.9 BUILDING 5 - SOUTH ELEVATION
1/8" = 1'-0"

1 A4.9 BUILDING 5 - WEST ELEVATION
1/8" = 1'-0"

HOOKER | DE JONG
Architects & Engineers
316 Morris Avenue
Studio Suite 410
Muskegon, MI 49440
P 231 | 722 | 3407
F 231 | 722 | 2589

MULTI-FAMILY HOUSING
THE MEADOWLANDS
MADISON, WI

KGC HOUSING DEVELOPMENT

Project Number	4-1125

ISSUANCE

No.	Date	Description
1	2019.05.28	SITE PLAN REVIEW

NOT FOR CONSTRUCTION

Copyright © 2019 HDJ Inc. All Rights Reserved

EXTERIOR ELEVATIONS

A4.9

5/28/2019 2:08:21 PM
C:\1-Revit Projects\4-1125 - ARCH_ericmj(Recovery).rvt

VIEW DOWN WIND STONE DRIVE

VIEW ALONG MILWAUKEE AVE

HDJ HOOKER DEJONG Architects Engineers Planners

KCG DEVELOPMENT

EXTERIOR RENDERINGS - OVERALL | PR-1

THE MEADOWLANDS

MADISON, WI

5/28/2019

VIEW FROM PARKING LOT

VIEW FROM MILWAUKEE AVE

EXTERIOR RENDERINGS - BUILDING 1 (BLDG 2 SIM.)

PR-2

THE MEADOWLANDS

MADISON, WI

5/28/2019

VIEW ALONG WIND STONE

HDJ HOOKER | DEJONG | Architects Engineers Planners

KCG DEVELOPMENT

EXTERIOR RENDERINGS - BUILDING 3 | PR-3

THE MEADOWLANDS

MADISON, WI

5/28/2019

VIEW FROM MILWAUKEE AVE

VIEW FROM CORNER OF MILWAUKEE AND WIND STONE

HDJ HOOKER | DE JONG Architects Engineers Planners

KCG DEVELOPMENT

EXTERIOR RENDERINGS - BUILDING 4 | PR-4

THE MEADOWLANDS

MADISON, WI

5/28/2019

VIEW ALONG WIND STONE

HDJ HOOKER | DEJONG | Architects Engineers Planners

KCG DEVELOPMENT

EXTERIOR RENDERINGS - BUILDING 5 | PR-5

THE MEADOWLANDS

MADISON, WI

5/28/2019