MSA PROFESSIONAL SERVICES
More ideas. Better solutions.®

MEMO

To: Justin Temple – Temple Builders

David Sheriff and Mary Morgan – Owners

From: Erik Sorensen, PE, Senior Project Engineer

Subject: Morgan/Sheriff Residence Stormwater Management

5404 Lake Mendota Drive, Madison, Wisconsin

Date: October 21, 2015

Purpose

This memorandum along with supporting documentation summarizes the stormwater management, site grading, and construction site erosion control measures for a single family residence to be constructed at 5404 Lake Mendota Drive in the City of Madison (City), Wisconsin. This memorandum will be submitted to the City in support of permit applications for Demolition and Conditional Use to construct a single family home exceeding 10,000 sq. ft. of floor area on a lakefront lot.

Site and Project Description

The site is located along the east side of Lake Mendota Drive just north of its intersection with Norman Way, and includes approximately 98 ft. of frontage on Lake Mendota. The lot includes approximately 0.505 acres measured to the Ordinary High Water Mark (OHWM) of Lake Mendota.

The site is flanked by existing residences and accepts runoff from off-site. Portions of both of the adjacent lots, as well as a portion of the Lake Mendota Drive Right-of-Way (ROW), drain through the site. The narrow lot width presents concerns related to maintaining the site's ability to pass flood flows through the site without damaging the proposed home or either of the neighboring residences.

The existing residential lot includes 8,991 sq. ft. of impervious area and is approximately 41% impervious. The proposed site will include a home with a larger footprint, resulting in approximately 9,736 sq. ft. of "hard surfaced" area. However, the project will employ a pervious pavement system for both the driveway and lake side patio area resulting in a **net reduction** in impervious area to 6,203 sq. ft., or approximately 28% of the site. There will also be a **net reduction** in impervious area of approximately 370 sq. ft. within the adjacent ROW.

Stormwater Management Requirements

The development must meet the requirements of Chapter 28.138 – Lakefront Development of the City Zoning Code. As a residential site which is not adding impervious area, the development is not required to meet any post-construction stormwater management requirements. Regardless of the lack of requirements, the owners directed MSA to develop a plan which manages stormwater to a very high level.

Data Collection & Analysis

For this stormwater management plan MSA utilized:

- Field survey data collected by MSA in September 2015.
- Certified Survey Map and Site Plan prepared by D'Onofrio Kottke and Associates, dated April 24 2015 and May 7, 2015, respectively.
- 2-ft. interval LIDAR contours provided by Dane County (flown 2009).
- Storm Sewer base data provided by the City of Madison.
- Aerial photography of varying dates from Google Earth.

Off-Site Watershed

MSA analyzed the watershed which drains to a 3 ft. by 4 ft. concrete box culvert directly adjacent to the site. The box culvert extends along the Norman Way ROW and outlets to Lake Mendota just south of Spring Harbor Beach. The box culvert's watershed (depicted on Exhibit 1) encompasses approximately 41.1 acres at the inlet structure immediately south of the site's driveway.

MSA determined that the box culvert can convey approximately 95 CFS downstream of this inlet structure, prior to overtopping. This compares to estimated flood flows of 83 CFS for the 25-yr storm event and 130 CFS for the 100-yr storm event. MSA discussed the characteristics of the watershed and its storm water infrastructure with Greg Fries of City Engineering. Mr. Fries indicated that the system is also limited by upstream inlet capacity – that there are not enough inlets in the proper locations to get the runoff into the storm sewer network. Stormwater flows which are not carried by the sewer network will flow overland until reaching Lake Mendota. He also indicated, however, that City Engineering does not have record of complaints of flooding in this area from the neighborhood residents.

MSA surveyed the topography within the Lake Mendota Drive ROW in the area, and determined that overland flows from the bulk of the watershed are routed from the intersection of Norman Way and Lake Mendota Drive southerly toward Harbor Court and then easterly toward Spring Harbor/Lake Mendota.

Site Grading Design

Although overland flows from the bulk of the off-site watershed are not routed through the site, it is possible (due to unpredictable conditions such as snow storage or debris dams) that a portion of the overland flow could end up routed through the site. Because of this possibility, and because of concerns voiced by the site's neighbors, MSA prepared a grading plan which increases the overland

conveyance capacity of the side yards on both sides of the proposed house. The proposed residence will be slightly wider than the existing structure, however, the side yards will be graded to a lower elevation than in the existing condition, which will provide for improved cross sectional area and conveyance capacity during an emergency flood flow situation. As in the existing condition, the majority of the site will be graded towards the side yard swale along the north property line. MSA calculates that this swale will be able convey approximately 50 CFS prior to reaching the elevation of the adjacent home's foundation wall at grade (elevation 854.5). This is slightly better than the approximate 45 CFS conveyance capacity at that same elevation in the existing condition.

Grading limits will be at the property line along the north side, and at the line of an existing fence encroachment along the south property line. Grading will also be undertaken within the Lake Mendota ROW, both to remove existing driveway pavement and to install a new concrete ribbon curb to better direct flows from the ROW into the existing box culvert. The existing rock-stabilized shoreline will not be disturbed. Cross sections showing both existing and proposed grading of the side yards are included on Sheet 4 of the attached site plans (Exhibit 4). Photographs of the existing side yards are also provided as Exhibit 5. We note that both neighboring properties exist at higher elevation than subject site, and that the property to the south has installed a timber wall which effectively forces all side yard drainage through subject property.

The home will include a basement set at floor elevation 851.00, and the site grading design will allow for egress windows along the north and east sides of the house with a minimum low opening set at elevation 854.60. This compares to the regulatory 100-yr flood elevation for Lake Mendota of 852.6. The grade adjacent to the structure will be set at a maximum of 853.6 along the north and east sides.

The summer lake management target elevation range for Lake Mendota is 849.4 to 849.9, and the groundwater levels across the site are expected to be slightly higher than that. The OHWM elevation at the site is approximately 850.7. The home's basement will be protected by a flood proofing system designed by the project's architect.

The lake side of the lot includes areas lying within the City's Flood Storage Zoning District. The proposed home and lake side patio are designed to avoid encroachment into the Flood Storage District (FSD). There will, however, be minor grading undertaken within the FSD. MSA calculates that within the FSD, the total volume of fill placed will be approximately 1 cu. yds. and the total volume of cut is approximately 4 cu. yds. for a net gain of approximately 3 cu. yds. of floodplain storage on the site.

Proposed Stormwater Management Features

The design includes pervious pavements for both the driveway and the lake side patio. Roof runoff, as well as any overflows from the pervious pavements will be directed into a cistern to be located on the lake side of the home. Runoff collected within the cistern will be utilized to irrigate the site landscaping when needed. Any overflows from the cistern will be routed through a rain garden prior to exiting the site.

The proposed cistern will have a 9,000 gallon total capacity. The cistern's rainwater storage capacity will be augmented with potable water during dry spells when the cistern runs dry. The storage level within the cistern will be kept low to provide for maximum storage and capture of rainwater. The cistern will be provided with backflow prevention and will be designed in accordance with State and City plumbing code requirements.

A rain garden will be installed adjacent to the rock protected bank of Lake Mendota. The rain garden will consist of a 275 sq. ft., 4-inch deep depression with a one foot depth of engineered planting medium at the floor. It is anticipated that the rain garden will infiltrate both vertically and laterally towards the lake. No tiled outlet will be provided for the rain garden.

MSA prepared a WinSLAMM model to analyze the capture of runoff and pollutants from the site. The WinSLAMM modeling results indicate a 93.6% level of Total Suspended Solids (TSS) capture from the site impervious areas and a 61.5% level of Total Phosphorus (TP) from the site. The WinSLAMM modeling input and output is attached as Exhibit 3. We note that for modeling purposes, the proposed cistern was assumed to drain at a constant rate to approximate the anticipated irrigation need of one-inch per week for the landscaped areas.

Due to the site's adjacency to Lake Mendota, an analysis of peak runoff rates and infiltration from the site is somewhat meaningless, however, we note that due to the decrease in impervious area, peak runoff rates will decrease while infiltration rates will increase. The on-site soils are mapped as Sable silty clay loam, and infiltration rates are anticipated to be low due to the clay content of the soil and the proximity to seasonal high groundwater. An infiltration rate of 0.04 inches per hour was used to model the native soils beneath the pervious pavements and rain garden. We note that no pretreatment of runoff prior to infiltration is required for a residential site development.

Construction Site Erosion Control

A site erosion control plan is included with Exhibit 4. It is anticipated that almost the entire 22,000 sq. ft. site will be disturbed by construction. No tentative construction schedule has been developed and as such, a USLE spreadsheet and erosion control permit application have not yet been prepared. The site is relatively flat, and no atypical problems are anticipated with construction site erosion control.

Conclusions

The owners desire a site design that goes above and beyond typical stormwater management requirements. The proposed design treats runoff from the site to an exemplary 93.6% TSS performance level. Further, the site is designed to improve flood conveyance through the side yards in an emergency flood situation. Albeit on a small scale, the site will do an excellent job of improving the water quality of the adjacent Lake Mendota.

MORGAN/SHERIFF RESIDENCE
STORMWATER MANAGEMENT

Exhibit 1 – Off-Site Watershed

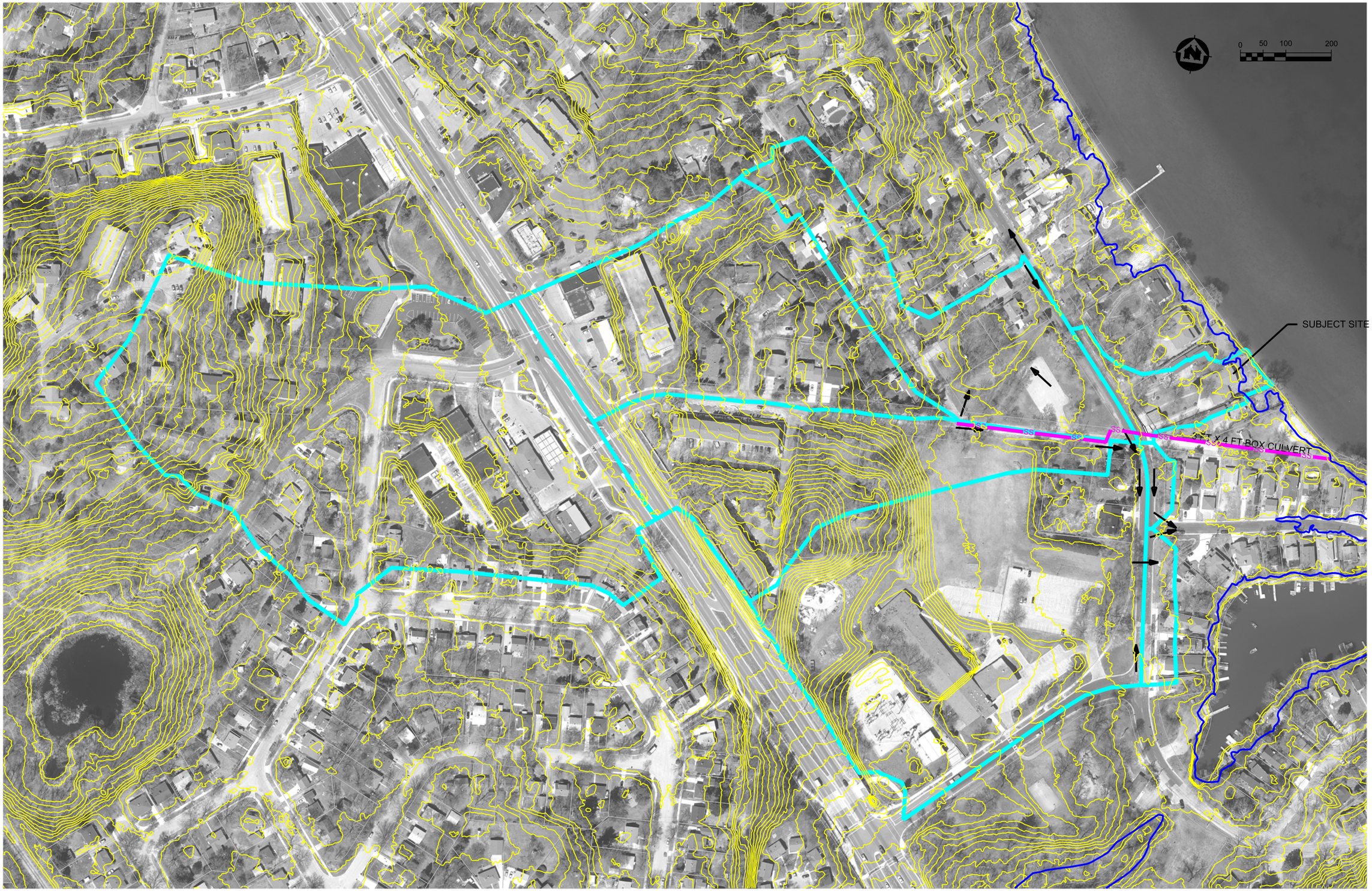

PROJECT NO.: 6344002	SCALE: AS SHOWN	NO.	DATE	REVISION	BY
PROJECT DATE:	DRAWN BY: TM				
F.B.:	CHECKED BY: ES				

PLOT DATE OVERALL_WATERSHED.dgn 10/19/2015 2:50:10 PM esorensen

MSA PROFESSIONAL SERVICES
TRANSPORTATION • MUNICIPAL
DEVELOPMENT • ENVIRONMENTAL
2901 International Lane Madison, WI 53704
608-242-7779 1-800-446-0679 Fax: 608-242-5664
Web Address: www.msa-ps.com
© MSA Professional Services, Inc.

OFF-SITE WATERSHEDS
(TO 3 X 4 BOX CULVERT)

MORGAN / SHERIFF RESIDENCE
5404 LAKE MENDOTA DRIVE
MADISON, WISCONSIN

FILE NO. 6344002
SHEET ---

File Name: \\msanas1\department\CADD\Blocks\Borders\22x34 Plan.dwg

MORGAN/SHERIFF RESIDENCE
STORMWATER MANAGEMENT

Exhibit 2 – Proposed Site

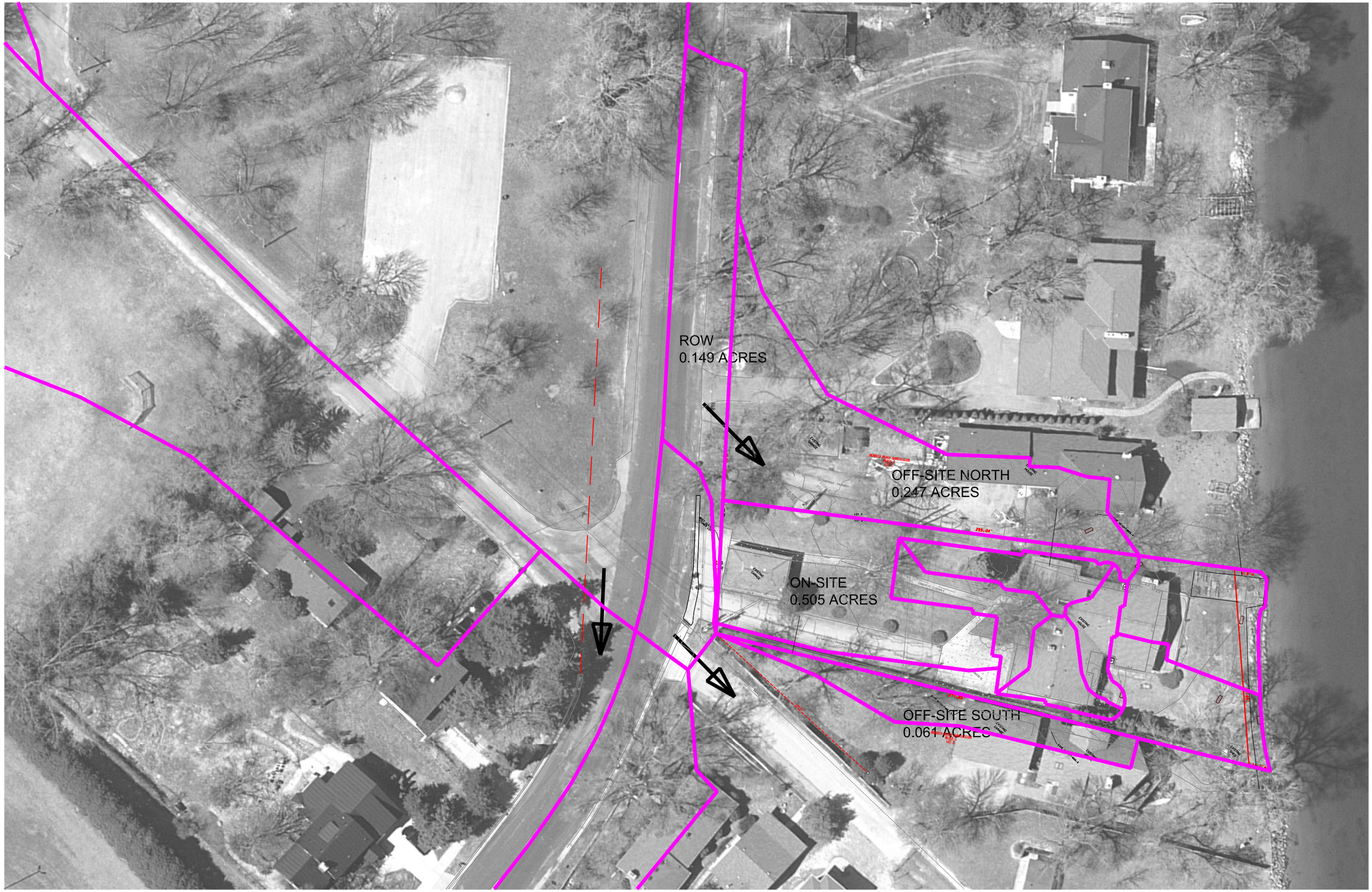

PROJECT NO.: 6344002	SCALE: AS SHOWN	NO.	DATE	REVISION	BY
PROJECT DATE:	DRAWN BY: TM				
F.B.:	CHECKED BY: ES				

PLOT DATEproposed_site.dgn 10/20/2015 1:27:18 PM esorensen

MSA PROFESSIONAL SERVICES
TRANSPORTATION • MUNICIPAL
DEVELOPMENT • ENVIRONMENTAL
2901 International Lane Madison, WI 53704
608-242-7779 1-800-446-0679 Fax: 608-242-5664
Web Address: www.msa-ps.com
© MSA Professional Services, Inc.

PROPOSED SITE

MORGAN / SHERIFF RESIDENCE
5404 LAKE MENDOTA DRIVE
MADISON, WISCONSIN

6344002

SHEET

File Name: \\msanas1\department\CADD\Blocks\Borders\22x34 Plan.dwg

MORGAN/SHERIFF RESIDENCE
STORMWATER MANAGEMENT

Exhibit 3 – WinSLAMM Data

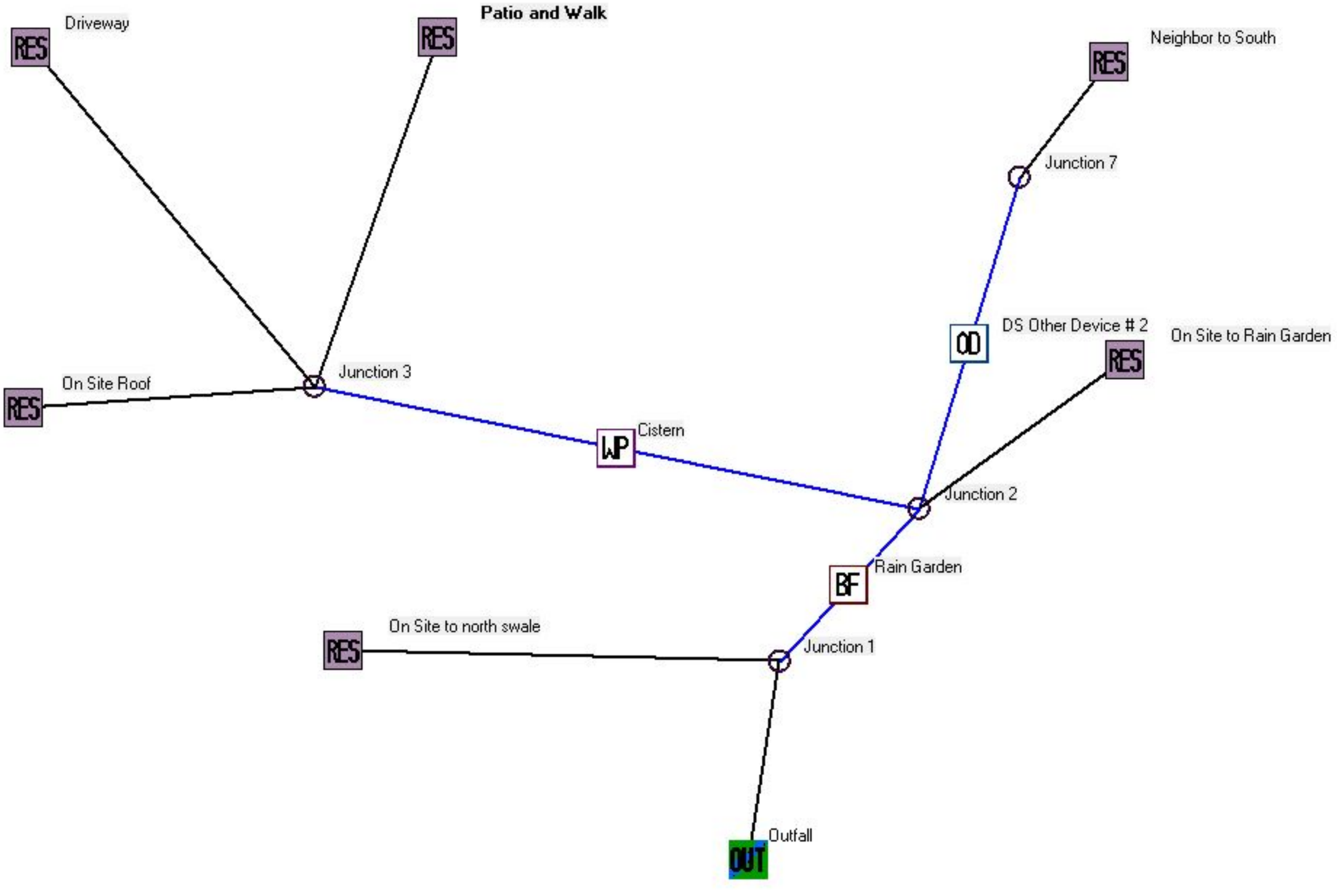
Driveway
RES
Patio and Walk
RES
Neighbor to South
RES
Junction 7
DS Other Device # 2
OD
On Site to Rain Garden
RES
On Site Roof
RES
Junction 3
Cistern
WP
Junction 2
Rain Garden
BF
On Site to north swale
RES
Junction 1
Outfall
OUT

proposed site rev - InputData

Data file name: P:\6300s\6340s\6344\06344002\stormwater\proposed site rev.mdb
WinSLAMM Version 10.1.6
Rain file name: C:\WinSLAMM Files\Rain Files\WisReg - Madison WI 1981.RAN
Particulate Solids Concentration file name: C:\WinSLAMM Files\v10.1 WI_AVG01.pscx
Runoff Coefficient file name: C:\WinSLAMM Files\WI_SL06 Dec06.rsvx
Residential Street Delivery file name: C:\WinSLAMM Files\WI_Res and Other Urban Dec06.std
Institutional Street Delivery file name: C:\WinSLAMM Files\WI_Com Inst Indust Dec06.std
Commercial Street Delivery file name: C:\WinSLAMM Files\WI_Com Inst Indust Dec06.std
Industrial Street Delivery file name: C:\WinSLAMM Files\WI_Com Inst Indust Dec06.std
Other Urban Street Delivery file name: C:\WinSLAMM Files\WI_Res and Other Urban Dec06.std
Freeway Street Delivery file name: C:\WinSLAMM Files\Freeway Dec06.std
Apply Street Delivery Files to Adjust the After Event Load Street Dirt Mass Balance: False
Pollutant Relative Concentration file name: C:\WinSLAMM Files\WI_GEO03.ppdx
Cost Data file name:
Seed for random number generator: -42
Study period starting date: 01/01/81 Study period ending date: 12/31/81
Start of Winter Season: 12/02 End of Winter Season: 03/12
Date: 10-20-2015 Time: 11:07:58
Site information:

Pre-Development Area Description	Pre-Development Area (ac)	Pre-Development CN
predev site imp	.210	98
predev site per	.300	68
south neighbor	.030	98
south neighbor	.030	68
Total Area (ac)/Composite CN	.570	81

LU# 1 - Residential: Neighbor to South Total area (ac): 0.063
1 - Roofs 1: 0.030 ac. Pitched Connected Connected
51 - Small Landscaped Areas 1: 0.033 ac. Normal Silty

LU# 2 - Residential: On Site Roof Total area (ac): 0.138
1 - Roofs 1: 0.138 ac. Pitched Connected Connected

LU# 3 - Residential: On Site to Rain Garden Total area (ac): 0.103
51 - Small Landscaped Areas 1: 0.103 ac. Normal Silty

LU# 4 - Residential: Driveway Total area (ac): 0.055
25 - Driveways 1: 0.055 ac. Connected Connected PP-CP#5

LU# 5 - Residential: On Site to north swale Total area (ac): 0.178
51 - Small Landscaped Areas 1: 0.178 ac. Normal Silty

LU# 6 - Residential: Patio and Walk Total area (ac): 0.029
31 - Sidewalks 1: 0.029 ac. Connected Connected PP-CP#4

Control Practice 1: Wet Detention Pond CP# 1 (DS) - Cistern
Particle Size Distribution file name: Not needed - calculated by program
Initial stage elevation (ft): 6

Peak to Average Flow Ratio: 3.8
Maximum flow allowed into pond (cfs): No maximum value entered
Outlet Characteristics:
Outlet type: Orifice 1
1. Orifice diameter (ft): 0.5
2. Number of orifices: 1
3. Invert elevation above datum (ft): 6
Outlet type: Broad Crested Weir
1. Weir crest length (ft): 20
2. Weir crest width (ft): 6
3. Height of weir opening (cfs): 0
4. Height from datum to bottom of weir opening: 7
Pond stage and surface area

Entry Number	Stage (ft)	Pond Area (acres)	Natural Seepage (in/hr)	Other Outflow (cfs)
0	0.00	0.0000	0.00	0.00
1	0.01	0.0030	0.00	0.00
2	1.00	0.0030	0.00	0.00
3	2.00	0.0030	0.00	0.00
4	3.00	0.0030	0.00	0.00
5	4.00	0.0030	0.00	0.00
6	5.00	0.0030	0.00	0.00
7	6.00	0.0030	0.00	0.00
8	7.00	0.0030	0.00	0.00
9	8.00	0.0030	0.00	0.00

Control Practice 2: Biofilter CP# 1 (DS) - Rain Garden
1. Top area (square feet) = 425
2. Bottom aea (square feet) = 275
3. Depth (ft): 1.4
4. Biofilter width (ft) - for Cost Purposes Only: 10
5. Infiltration rate (in/hr) = 0.04
6. Random infiltration rate generation? No
7. Infiltration rate fraction (side): 1
8. Infiltration rate fraction (bottom): 1
9. Depth of biofilter that is rock filled (ft) 0
10. Fraction of rock filled volume as voids = 0
11. Engineered soil infiltration rate: 3.6
12. Engineered soil depth (ft) = 1
13. Engineered soil void ratio = 0.33
14. Percent solids reduction due to flow through engineered soil = 0
15. Biofilter peak to average flow ratio = 3.8
16. Number of biofiltration control devices = 1
17. Particle size distribution file: Not needed - calculated by program
18. Initial water surface elevation (ft): 0

Soil Data Soil Type Fraction in Eng. Soil
Biofilter Outlet/Discharge Characteristics:
Outlet type: Broad Crested Weir
1. Weir crest length (ft): 20
2. Weir crest width (ft): 6
3. Height of datum to bottom of weir opening: 1.3

Control Practice 3: Other Device CP# 1 (DS) - DS Other Device # 2
Fraction of drainage area served by device (ac) = 1.00
Concentration reduction fraction = 1.00
Runoff volume reduction fraction = 0

Control Practice 4: Porous Pavement CP# 1 (SA) - SA Device, LU# 6 ,SA# 31
Porous pavement area (ac): 0.029
Inflow hydrograph peak to average flow ratio: 3.8
Porous pavement thickness (in): 2
Porous pavement void ratio: 0.25
Aggregate bedding thickness (in): 2
Aggregate bedding void ratio: 0.25
Aggregate base reservoir thickness (in): 24
Aggregate base reservoir void ratio: 0.25
Porous pavement surface area to aggregate base area ratio: 1
Underdrain diameter (in): 4
Underdrain outlet invert elevation (ft above datum): 15
Number of underdrains: 1
Subgrade seepage rate (in/hr): 0.04
Use random number generation to account for uncertainty in seepage rate: 0
Subgrade seepage rate COV: 0
Surface pavement initial infiltration rate (in/hr): 100
Surface Pavement Percent Solids Removal Upon Cleaning: 50
Porous pavement surface clogging load (lbs/sf): 0.06
Porous pavement restorative cleaning frequency: Annually
TSS concentration reduction percentage through underdrain: 55
Porous pavement particle size distribution file name: Not needed - calculated by program

Control Practice 5: Porous Pavement CP# 2 (SA) - SA Device, LU# 4 ,SA# 25
Porous pavement area (ac): 0.055
Inflow hydrograph peak to average flow ratio: 3.8
Porous pavement thickness (in): 2
Porous pavement void ratio: 0.25
Aggregate bedding thickness (in): 2
Aggregate bedding void ratio: 0.25
Aggregate base reservoir thickness (in): 24
Aggregate base reservoir void ratio: 0.25
Porous pavement surface area to aggregate base area ratio: 80
Underdrain diameter (in): 4
Underdrain outlet invert elevation (ft above datum): 11
Number of underdrains: 1
Subgrade seepage rate (in/hr): 0.04
Use random number generation to account for uncertainty in seepage rate: 0
Subgrade seepage rate COV: 0
Surface pavement initial infiltration rate (in/hr): 100
Surface Pavement Percent Solids Removal Upon Cleaning: 50
Porous pavement surface clogging load (lbs/sf): 0.06
Porous pavement restorative cleaning frequency: Annually
TSS concentration reduction percentage through underdrain: 55
Porous pavement particle size distribution file name: Not needed - calculated by program

Data File: P:\6300s\6340s\6344\06344002\stormwater\proposed site rev.mdb
Rain File: WisReg - Madison WI 1981.RAN
Date: 10-20-15 Time: 11:04:06 AM
Site Description:

Neighbor to South Areas - Runoff Volume (cu. ft)
Summary for All Events

	Rain Total	Land Use T	Roofs 1	Small Land	Rv	Total Losse	Calculated CN*
Minimum:	0	0	0	0	0	0	0
Maximum:	2.59	341	279	62	0.58	1.1	99.7
Average:	0.26	28	26	2	0.48	0.53	93.8
Total:	28.81	3083	2878	209		15.38	

On Site Roof Areas - Runoff Volume (cu. ft)
Summary for All Events

	Rain Total	Land Use T	Roofs 1	Rv	Total Losse	Calculated CN*
Minimum:	0	0	0	0	0	0
Maximum:	2.59	1284	1284	0.99	0.03	99.8
Average:	0.26	121	121	0.94	0.03	99.7
Total:	28.81	13227	13218		2.37	

On Site to Rain Garden Areas - Runoff Volume (cu. ft)
Summary for All Events

	Rain Total	Land Use T	Small Land	Rv	Total Losse	Calculated CN*
Minimum:	0	0	0	0	0	0
Maximum:	2.59	194	194	0.2	2.07	90.3
Average:	0.26	6	6	0.13	1.48	74.4
Total:	28.81	647	648		27.09	

Driveway Areas - Runoff Volume (cu. ft)
Summary for All Events

	Rain Total	Land Use T	Driveways	Rv	Total Losse	Calculated CN*
Minimum:	0	0	0	0	0	0
Maximum:	2.59	0	0	0	2.59	0
Average:	0.26	0	0	74.41	74.41	74.4
Total:	28.81	0	0		28.81	

On Site to north swale Areas - Runoff Volume (cu. ft)
Summary for All Events

	Rain Total	Land Use T	Small Land	Rv	Total Losse	Calculated CN*
Minimum:	0	0	0	0	0	0
Maximum:	2.59	335	335	0.2	2.07	90.3
Average:	0.26	10	10	0.13	1.48	74.4
Total:	28.81	1117	1118		27.09	

Patio and Walk Areas - Runoff Volume (cu. ft)
Summary for All Events

	Rain Total	Land Use T	Sidewalks/	Rv	Total Losse	Calculated CN*
Minimum:	0	0	0	0	0	0
Maximum:	2.59	0	0	0	2.59	0
Average:	0.26	0	0	74.41	74.41	74.4
Total:	28.81	0	0		28.81	

Data File: P:\6300s\6340s\6344\06344002\stormwater\proposed site rev.mdb
Rain File: WisReg - Madison WI 1981.RAN
Date: 10-20-15 Time: 11:04:06 AM
Site Description:

Neighbor to South - Source Area Percentage Contribution of Runoff Volume
Summary for Runoff Producing Events

	Rain Total	Land Use T	Roofs 1	Small Landscaped Area 1
Minimum:	0	0	0	0
Maximum:	2.59	17.9	17.9	2.9
Fl Wt Ave:	N/A	17.08	16.08	1.961

On Site Roof - Source Area Percentage Contribution of Runoff Volume
Summary for Runoff Producing Events

	Rain Total	Land Use T Roofs 1	
Minimum:	0	0	0
Maximum:	2.59	82.1	82.1
Fl Wt Ave:	N/A	73.94	73.94

On Site to Rain Garden - Source Area Percentage Contribution of Runoff Volume
Summary for Runoff Producing Events

	Rain Total	Land Use T Small Landscaped Area 1	
Minimum:	0	0	0
Maximum:	2.59	9	9
Fl Wt Ave:	N/A	6.088	6.088

Driveway - Source Area Percentage Contribution of Runoff Volume
Summary for Runoff Producing Events

	Rain Total	Land Use T Driveways 1	
Minimum:	0	0	0
Maximum:	2.59	0	0
Fl Wt Ave:	N/A	0	0

On Site to north swale - Source Area Percentage Contribution of Runoff Volume
Summary for Runoff Producing Events

	Rain Total	Land Use T Small Landscaped Area 1	
Minimum:	0	0	0
Maximum:	2.59	15.5	15.5
Fl Wt Ave:	N/A	10.5	10.5

Patio and Walk - Source Area Percentage Contribution of Runoff Volume
Summary for Runoff Producing Events

	Rain Total	Land Use T Sidewalks/ Walks 1	
Minimum:	0	0	0
Maximum:	2.59	0	0
Fl Wt Ave:	N/A	0	0

Data File: P:\6300s\6340s\6344\06344002\stormwater\proposed site rev.mdb
Rain File: WisReg - Madison WI 1981.RAN
Date: 10-20-15 Time: 11:04:07 AM
Site Description:

Neighbor to South Areas - Particulate Solids Concentration (mg/L)
Summary for Runoff Producing Events

	Rain Total	Land Use T Roofs 1	Small Landscaped Area 1	
Minimum:	0	0	0	0
Maximum:	2.59	71.55	37	227
Fl Wt Ave:	N/A	49.77	37	227

On Site Roof Areas - Particulate Solids Concentration (mg/L)
Summary for Runoff Producing Events

	Rain Total	Land Use T Roofs 1	
Minimum:	0	0	0
Maximum:	2.59	37	37
Fl Wt Ave:	N/A	37	37

On Site to Rain Garden Areas - Particulate Solids Concentration (mg/L)
Summary for Runoff Producing Events

	Rain Total	Land Use T Small Landscaped Area 1	
Minimum:	0	0	0
Maximum:	2.59	227	227
Fl Wt Ave:	N/A	227	227

Driveway Areas - Particulate Solids Concentration (mg/L)
Summary for Runoff Producing Events

	Rain Total	Land Use T Driveways 1	
Minimum:	0	0	0

Maximum:	2.59	0	0
Fl Wt Ave:	N/A	0	0

On Site to north swale Areas - Particulate Solids Concentration (mg/L)
Summary for Runoff Producing Events

	Rain Total	Land Use T	Small Landscaped Area 1
Minimum:	0	0	0
Maximum:	2.59	227	227
Fl Wt Ave:	N/A	227	227

Patio and Walk Areas - Particulate Solids Concentration (mg/L)
Summary for Runoff Producing Events

	Rain Total	Land Use T	Sidewalks/ Walks 1
Minimum:	0	0	0
Maximum:	2.59	0	0
Fl Wt Ave:	N/A	0	0

Data File: P:\6300s\6340s\6344\06344002\stormwater\proposed site rev.mdb
Rain File: WisReg - Madison WI 1981.RAN
Date: 10-20-15 Time: 11:04:06 AM
Site Description:

Neighbor to South Areas - Particulate Solids Yield (lbs)
Summary for All Events

	Rain Total	Land Use T	Roofs 1	Small Landscaped Area 1
Minimum:	0	0	0	0
Maximum:	2.59	1.52	0.645	0.8793
Flow Wt Av	N/A	0.4857	0.2622	0.4774
Total:	28.81	9.58	6.642	2.935

9.6 lbs (off-site)

On Site Roof Areas - Particulate Solids Yield (lbs)
Summary for All Events

	Rain Total	Land Use T	Roofs 1
Minimum:	0	0	0
Maximum:	2.59	2.97	2.967
Flow Wt Av	N/A	1.206	1.206
Total:	28.81	30.55	30.55

30.6 lbs (roof)

On Site to Rain Garden Areas - Particulate Solids Yield (lbs)
Summary for All Events

	Rain Total	Land Use T	Small Landscaped Area 1
Minimum:	0	0	0
Maximum:	2.59	2.75	2.745
Flow Wt Av	N/A	1.49	1.49
Total:	28.81	9.16	9.163

9.2 lbs (landscaped areas)

Driveway Areas - Particulate Solids Yield (lbs)
Summary for All Events

	Rain Total	Land Use T	Driveways 1
Minimum:	0	0	0
Maximum:	2.59	0	0
Flow Wt Av	N/A	0	0
Total:	28.81	0	0

40.1 lbs (taken from model without pervious pavement source area control)

On Site to north swale Areas - Particulate Solids Yield (lbs)
Summary for All Events

	Rain Total	Land Use T	Small Landscaped Area 1
Minimum:	0	0	0
Maximum:	2.59	4.74	4.743
Flow Wt Av	N/A	2.575	2.575
Total:	28.81	15.83	15.83

15.8 lbs (landscaped areas)

Patio and Walk Areas - Particulate Solids Yield (lbs)
Summary for All Events

	Rain Total	Land Use T	Sidewalks/ Walks 1
Minimum:	0	0	0
Maximum:	2.59	0	0
Flow Wt Av	N/A	0	0
Total:	28.81	0	0

10.3 lbs (taken from model run without pervious pavement source area control)

Data File: P:\6300s\6340s\6344\06344002\stormwater\proposed site rev.mdb
Rain File: WisReg - Madison WI 1981.RAN
Date: 10-20-15 Time: 11:04:07 AM
Site Description:

81.0lbs total load from hard scape

Neighbor to South - Source Area Percentage Contribution of Particulate Solids Yield
Summary for Runoff Producing Events

	Rain Total	Land Use T	Roofs 1	Small Landscaped Area 1
Minimum:	0	0	0	0
Maximum:	2.59	17.9	17.9	7.3
Fl Wt Ave:	N/A	15.2	11.63	5.613

On Site Roof - Source Area Percentage Contribution of Particulate Solids Yield
Summary for Runoff Producing Events

	Rain Total	Land Use T	Roofs 1
Minimum:	0	0	0
Maximum:	2.59	82.1	82.1
Fl Wt Ave:	N/A	53.51	53.51

On Site to Rain Garden - Source Area Percentage Contribution of Particulate Solids Yield
Summary for Runoff Producing Events

	Rain Total	Land Use T	Small Landscaped Area 1
Minimum:	0	0	0
Maximum:	2.59	22.9	22.9
Fl Wt Ave:	N/A	17.57	17.57

Driveway - Source Area Percentage Contribution of Particulate Solids Yield
Summary for Runoff Producing Events

	Rain Total	Land Use T	Driveways 1
Minimum:	0	0	0
Maximum:	2.59	0	0
Fl Wt Ave:	N/A	0	0

On Site to north swale - Source Area Percentage Contribution of Particulate Solids Yield
Summary for Runoff Producing Events

	Rain Total	Land Use T	Small Landscaped Area 1
Minimum:	0	0	0
Maximum:	2.59	39.6	39.6
Fl Wt Ave:	N/A	30.37	30.37

Patio and Walk - Source Area Percentage Contribution of Particulate Solids Yield
Summary for Runoff Producing Events

	Rain Total	Land Use T	Sidewalks/ Walks 1
Minimum:	0	0	0
Maximum:	2.59	0	0
Fl Wt Ave:	N/A	0	0

Data File: P:\6300s\6340s\6344\06344002\stormwater\proposed site rev.mdb
Rain File: WisReg - Madison WI 1981.RAN
Date: 10-20-15 Time: 11:04:07 AM
Site Description:

Control Practice Type ==>		CP# 5 - Porous Pavement			CP# 4 - Porous Pavement			CP# 1 - Wet Detention Ponds			CP# 3 - Other Device			CP# 2 - Biofiltration/Infiltration		
Control Practice Name/Location ==>		SA Device, LU# 4 ,SA# 25			SA Device, LU# 6 ,SA# 31			Cistern			DS Other Device # 2			Rain Garden		
Rain Number	Start Date Rain Total (in)	Influent Ru	Effluent Ru	Runoff Vol. Percent Re	Influent Ru	Effluent Ru	Runoff Vol. Percent Re	Influent Ru	Effluent Ru	Runoff Vol. Percent Re	Influent Ru	Effluent Ru	Runoff Vol. Percent Re	Influent Ru	Effluent Ru	Runoff Vol. Percent Reduction
Minimum:	0	0	0	0	0	0	0	0	0	-29470	0	0	0	0	0	0
Maximum:	2.59	473.5	0	100	249.7	0	100	1284	1282	84.39	341.3	341.3	0	1817	1631	100

Average:	0.26	38.3	0	82.57	20.2	0	82.57	121.35	127.17	-682.28	28.28	28.28	0	161.4	104.32	57.38
Total:	28.81	4175	0	100	2201	0	100	13227	13862	-4.8	3083	3083	0	17592	11371	35.36

Data File: P:\6300s\6340s\6344\06344002\stormwater\proposed site rev.mdb
Rain File: WisReg - Madison WI 1981.RAN
Date: 10-20-15 Time: 11:04:07 AM
Site Description:

Control Practice Type ==>		CP# 5 - Porous Pavement			CP# 4 - Porous Pavement			CP# 1 - Wet Detention Ponds			CP# 3 - Other Device			CP# 2 - Biofiltration/Infiltration		
Control Practice Name/Location ==>		SA Device, LU# 4 ,SA# 25			SA Device, LU# 6 ,SA# 31			Cistern			DS Other Device # 2			Rain Garden		
Rain Numb	Start Date Rain Total (in)	Influent Pa	Effluent Pa	Part.Yield Percent Red	Influent Pa	Effluent Pa	Part.Yield Percent Red	Influent Pa	Effluent Pa	Part.Yield Percent Red	Influent Pa	Effluent Pa	Part.Yield Percent Red	Influent Pa	Effluent Pa	Part.Yield Percent Reduction
Minimum:	0	0	0	0	0	0	0	0	0	0	0	0	0	0	0	0
Maximum:	2.59	4.553	0	100	1.169	0	100	2.967	0.9239	82.01	1.524	0	100	3.668	3.293	100
Average:	0.26	0.3682	0	82.57	0.09456	0	82.57	0.2803	0.06347	65.58	0.08787	0	82.57	0.1475	0.1117	56.46
Total:	28.81	40.14	0	100	10.31	0	100	30.55	6.918	77.36	9.577	0	100	16.08	12.17	24.29

Data File: P:\6300s\6340s\6344\06344002\stormwater\proposed site rev.mdb
Rain File: WisReg - Madison WI 1981.RAN
Date: 10-20-15 Time: 11:04:07 AM
Site Description:

Control Practice Type ==>		CP# 5 - Porous Pavement			CP# 4 - Porous Pavement			CP# 1 - Wet Detention Ponds			CP# 3 - Other Device			CP# 2 - Biofiltration/Infiltration		
Control Practice Name/Location ==>		SA Device, LU# 4 ,SA# 25			SA Device, LU# 6 ,SA# 31			Cistern			DS Other Device # 2			Rain Garden		
Rain Numb	Start Date Rain Total (in)	Influent Pa	Effluent Pa	Part.Conc. Percent Rec	Influent Pa	Effluent Pa	Part.Conc. Percent Rec	Influent Pa	Effluent Pa	Part.Conc. Percent Rec	Influent Pa	Effluent Pa	Part.Conc. Percent Rec	Influent Pa	Effluent Pa	Part.Conc. Percent Reduction
Minimum:	0	0	0	0	0	0	0	0	0	-1.53E+01	0	0	0	0	0	0
Maximum:	2.59	154	0	100	75	0	100	37	42.65	99.92	71.55	0	100	33.97	33.97	100
Average:	0.26	127.2	0	82.57	61.93	0	82.57	30.55	8.586	59.36	33	0	82.57	8.24	4.521	44.04

Data File: P:\6300s\6340s\6344\06344002\stormwater\proposed site rev.mdb
Rain File: WisReg - Madison WI 1981.RAN
Date: 10-20-15 Time: 11:04:07 AM
Site Description:

Control Pra	Control Pra	Control Pra	Total Inflov	Total Outfl	Percent Vo	Total Influe	Total Effluc	Percent Lo:	Flow Weigl	Flow Weigl	Percent Co	Influent Mi	Effluent Mi	Notes	Maximum	Maximum	Maximum	Hydraulic \	Minimum \	% Device V	Bypass Volı	Treated Vo	Number of Days Dry (c	% of Cloggi
1	Wet Deten	Cistern	13228	13863	-4.80E+00	30.55	6.918	77.36	37	7.993	78.396	7.8	1.71	No Pond O	981.2	0.99	6.06	13863	1					
2	Biofilter	Rain Garde	17592	11371	35.36	16.08	12.17	24.32	14.64	17.15	-17.126	2.75	2.96	No Biofilter Overflows			1.33	10922						
3	Other Devi	DS Other D	3083	3083	0	9.578	0	100	49.77	0	100	7.8	7.8											
4	Porous Pav	SA Device,	2201	0	100	10.31	0	100	75	0	100	7.8	0											0.01
5	Porous Pav	SA Device,	4175	0	100	40.14	0	100	154	0	100	7.8	0											0.02

Data File: P:\6300s\6340s\6344\06344002\stormwater\proposed site rev.mdb
Rain File: WisReg - Madison WI 1981.RAN
Date: 10-20-15 Time: 11:04:07 AM
Site Description:

Neighbor to South Areas - Pollutant Concentration: Particulate Phosphorus (mg/L)
Summary for Runoff Producing Events

	Rain Total	Land Use T	Roofs 1	Small Landscaped Area 1
Minimum:	0	0	0	0
Maximum:	2.59	0.2859	0.1218	1.024
Fl Wt Ave:	N/A	0.1825	0.1218	1.024

On Site Roof Areas - Pollutant Concentration: Particulate Phosphorus (mg/L)
Summary for Runoff Producing Events

Total load out from rain garden - 12.2 lbs
attributable to landscaped area - 9.2 x .757 = 7.0 lbs
Total load out attributable to hardscape - 5.2 lbs

TSS Performance - 81.0 lbs generated / 5.2 lbs released - 93.6% capture

	Rain Total	Land Use T Roofs 1	
Minimum:	0	0	0
Maximum:	2.59	0.1218	0.1218
Fl Wt Ave:	N/A	0.1218	0.1218

On Site to Rain Garden Areas - Pollutant Concentration: Particulate Phosphorus (mg/L)
Summary for Runoff Producing Events

	Rain Total	Land Use T Small Landscaped Area 1	
Minimum:	0	0	0
Maximum:	2.59	1.024	1.024
Fl Wt Ave:	N/A	1.024	1.024

Driveway Areas - Pollutant Concentration: Particulate Phosphorus (mg/L)
Summary for Runoff Producing Events

	Rain Total	Land Use T Driveways 1	
Minimum:	0	0	0
Maximum:	2.59	0	0
Fl Wt Ave:	N/A	0	0

On Site to north swale Areas - Pollutant Concentration: Particulate Phosphorus (mg/L)
Summary for Runoff Producing Events

	Rain Total	Land Use T Small Landscaped Area 1	
Minimum:	0	0	0
Maximum:	2.59	1.024	1.024
Fl Wt Ave:	N/A	1.024	1.024

Patio and Walk Areas - Pollutant Concentration: Particulate Phosphorus (mg/L)
Summary for Runoff Producing Events

	Rain Total	Land Use T Sidewalks/ Walks 1	
Minimum:	0	0	0
Maximum:	2.59	0	0
Fl Wt Ave:	N/A	0	0

Data File: P:\6300s\6340s\6344\06344002\stormwater\proposed site rev.mdb
Rain File: WisReg - Madison WI 1981.RAN
Date: 10-20-15 Time: 11:04:07 AM
Site Description:

Neighbor to South Areas - Pollutant Yield: Particulate Phosphorus (lbs)
Summary for Runoff Producing Events

	Rain Total	Land Use T Roofs 1	Small Landscaped Area 1	
Minimum:	0	0	0	0
Maximum:	2.59	0.006091	0.002124	0.003967
Fl Wt Ave:	N/A	0.001857	8.64E-04	0.002154
Total:	28.81	0.03511	0.02187	0.01324

On Site Roof Areas - Pollutant Yield: Particulate Phosphorus (lbs)
Summary for Runoff Producing Events

	Rain Total	Land Use T Roofs 1	
Minimum:	0	0	0
Maximum:	2.59	0.00977	0.00977

Fl Wt Ave:	N/A	0.003972	0.003972
Total:	28.81	0.1006	0.1006

On Site to Rain Garden Areas - Pollutant Yield: Particulate Phosphorus (lbs)
Summary for Runoff Producing Events

	Rain Total	Land Use T	Small Landscaped Area 1
Minimum:	0	0	0
Maximum:	2.59	0.01238	0.01238
Fl Wt Ave:	N/A	0.006722	0.006722
Total:	28.81	0.04133	0.04133

Driveway Areas - Pollutant Yield: Particulate Phosphorus (lbs)
Summary for Runoff Producing Events

	Rain Total	Land Use T	Driveways 1
Minimum:	0	0	0
Maximum:	2.59	0	0
Fl Wt Ave:	N/A	0	0
Total:	28.81	0	0

On Site to north swale Areas - Pollutant Yield: Particulate Phosphorus (lbs)
Summary for Runoff Producing Events

	Rain Total	Land Use T	Small Landscaped Area 1
Minimum:	0	0	0
Maximum:	2.59	0.0214	0.0214
Fl Wt Ave:	N/A	0.01162	0.01162
Total:	28.81	0.07143	0.07143

Patio and Walk Areas - Pollutant Yield: Particulate Phosphorus (lbs)
Summary for Runoff Producing Events

	Rain Total	Land Use T	Sidewalks/ Walks 1
Minimum:	0	0	0
Maximum:	2.59	0	0
Fl Wt Ave:	N/A	0	0
Total:	28.81	0	0

Data File: P:\6300s\6340s\6344\06344002\stormwater\proposed site rev.mdb
Rain File: WisReg - Madison WI 1981.RAN
Date: 10-20-15 Time: 11:04:07 AM
Site Description:

Neighbor to South Areas - Pollutant Yield Source Area Contribution: Particulate Phosphorus
Summary for Runoff Producing Events

	Rain Total	Land Use T	Roofs 1	Small Landscaped Area 1
Minimum:	0.01	12.3	4.3	0.8
Maximum:	2.59	17.9	17.9	8
Fl Wt Ave:	N/A	14.8	8.8	5.3

On Site Roof Areas - Pollutant Yield Source Area Contribution: Particulate Phosphorus
Summary for Runoff Producing Events

	Rain Total	Land Use T	Roofs 1
Minimum:	0.01	19.7	19.7
Maximum:	2.59	82.1	82.1
Fl Wt Ave:	N/A	48.5	40.5

On Site to Rain Garden Areas - Pollutant Yield Source Area Contribution: Particulate Phosphorus
Summary for Runoff Producing Events

	Rain Total	Land Use T	Small Landscaped Area 1
Minimum:	0.01	2.5	2.5

Maximum:	2.59	24.9	24.9
Fl Wt Ave:	N/A	19.8	16.6

Driveway Areas - Pollutant Yield Source Area Contribution: Particulate Phosphorus
Summary for Runoff Producing Events

	Rain Total	Land Use T	Driveways 1
Minimum:	0.01	999	0
Maximum:	2.59	0	0
Fl Wt Ave:	N/A		0

On Site to north swale Areas - Pollutant Yield Source Area Contribution: Particulate Phosphorus
Summary for Runoff Producing Events

	Rain Total	Land Use T	Small Landscaped Area 1
Minimum:	0.01	4.4	4.4
Maximum:	2.59	43.1	43.1
Fl Wt Ave:	N/A	34.1	28.7

Patio and Walk Areas - Pollutant Yield Source Area Contribution: Particulate Phosphorus
Summary for Runoff Producing Events

	Rain Total	Land Use T	Sidewalks/ Walks 1
Minimum:	0.01	999	0
Maximum:	2.59	0	0
Fl Wt Ave:	N/A		0

MORGAN/SHERIFF RESIDENCE
STORMWATER MANAGEMENT

Exhibit 4 – Project Plans

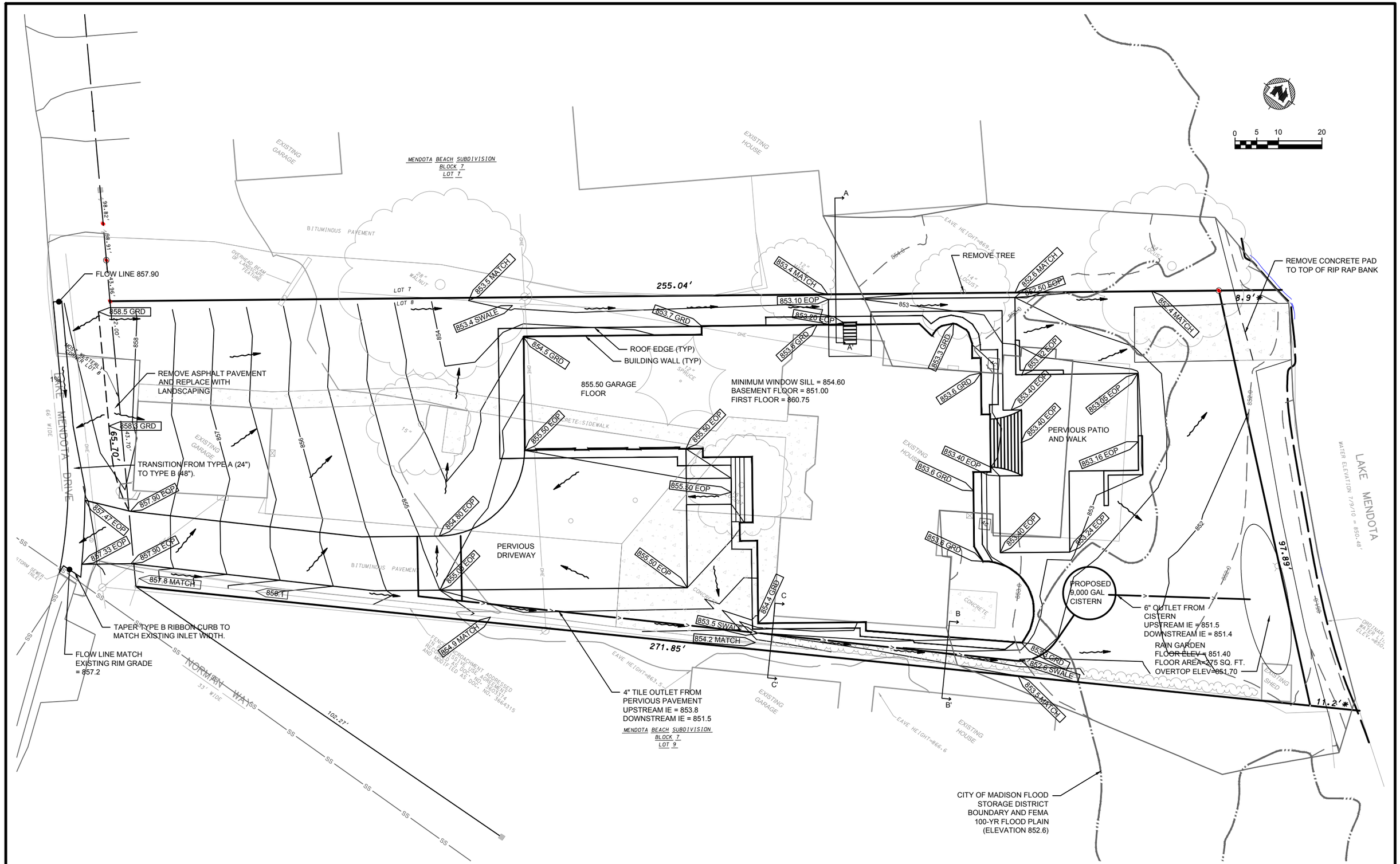

PROJECT NO.: 06344002	SCALE: AS SHOWN	NO.	DATE	REVISION	BY
PROJECT DATE: 10/20/2015	DRAWN BY: TM	.	.		.
F.B.: .	CHECKED BY: ES	.	.		.
.	.	.	.		.

PLOT DATE: 10/20/15, P:\6300s\6340s\6344\06344002\CADD\C3D\Design.dwg

Preliminary

MSA PROFESSIONAL SERVICES

TRANSPORTATION • MUNICIPAL
DEVELOPMENT • ENVIRONMENTAL
2901 International Lane Madison, WI 53704
608-242-7779 1-800-446-0679 Fax: 608-242-5664
Web Address: www.msa-ps.com
© MSA Professional Services, Inc.

SITE GRADING PLAN

MORGAN / SHERIFF RESIDENCE
5404 LAKE MENDOTA DRIVE
CITY OF MADISON, DANE COUNTY, WI

FILE NO. 06344002

SHEET 1

CONSTRUCTION SEQUENCE NOTES

1. ALL PERIMETER EROSION CONTROL MEASURES SHALL BE INSTALLED PRIOR TO LAND DISTURBANCE. ALL EROSION CONTROL SHALL BE INSTALLED AND MAINTAINED IN ACCORDANCE WITH CITY OF MADISON REQUIREMENTS.
2. AS SOON AS PRACTICABLE AFTER FOUNDATION CONSTRUCTION, THE SIDE YARDS SHALL BE GRADED TO DRAIN PER THE SITE GRADING PLAN.
3. THE RAIN GARDEN SHALL BE OVER-EXCAVATED AT THE START OF CONSTRUCTION AND SERVE AS A TEMPORARY SEDIMENT TRAP. AFTER THE REMAINDER OF THE SITE HAS STABILIZED SEDIMENT SHALL BE REMOVED FROM THE RAIN GARDEN AND IT SHALL BE CONSTRUCTED TO THE DESIGN CROSS SECTION - A 1.0 FT DEPTH OF 80% SAND AND 20% COMPOST AND PLANTED.

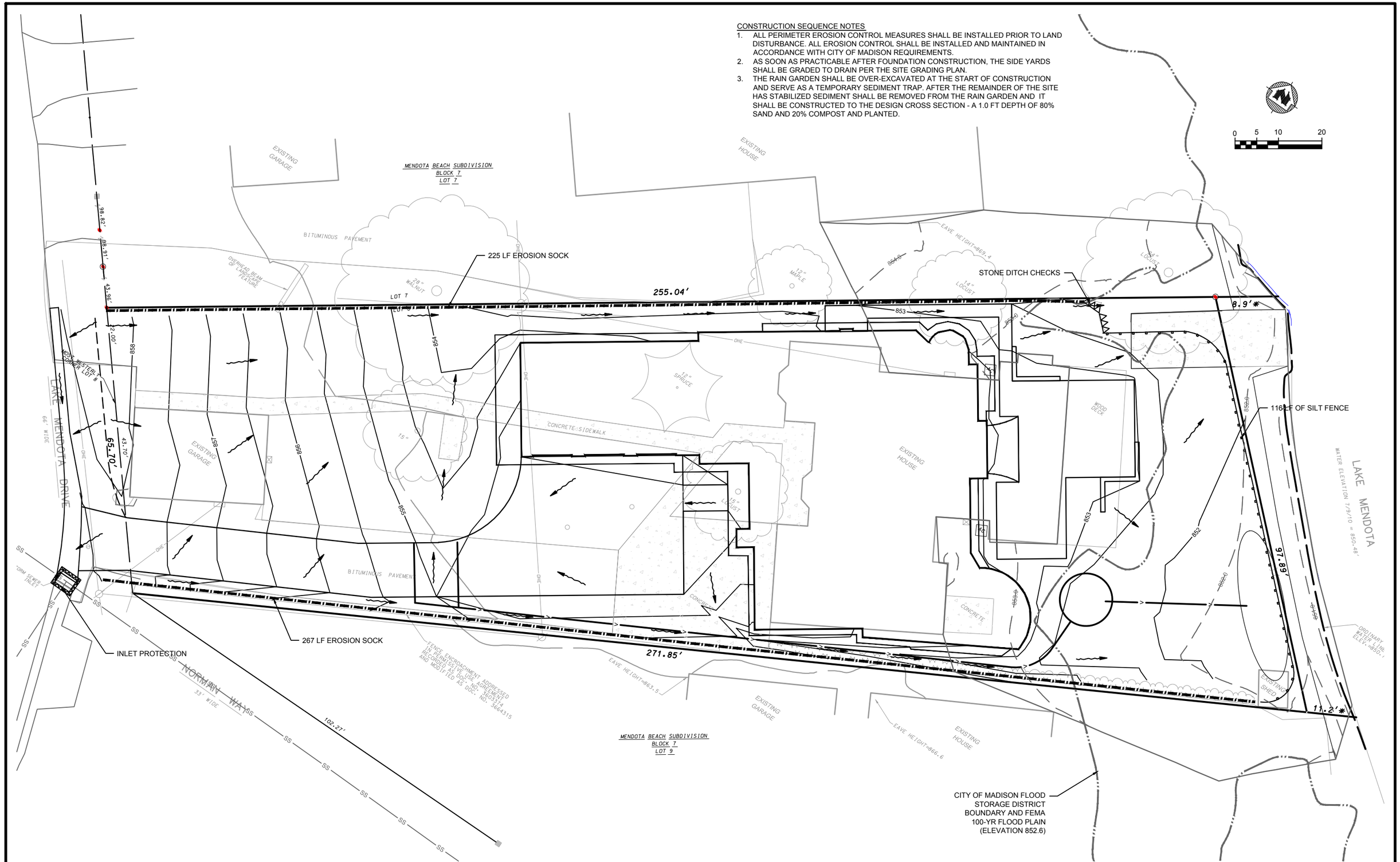

PROJECT NO.: 06344002	SCALE: AS SHOWN	NO.	DATE	REVISION	BY
PROJECT DATE: 10/20/2015	DRAWN BY: TM	1	10/27/15	CITY OF MADISON PLANNING DEPARTMENT COMMENTS	TM
F.B.: .	CHECKED BY: ES	.	.	.	.
.	.	.	.	.	.

PLOT DATE: 10/27/15, P:\6300s\6340s\6344\06344002\CADD\C3D\Design.dwg

Preliminary

MSA PROFESSIONAL SERVICES
TRANSPORTATION • MUNICIPAL DEVELOPMENT • ENVIRONMENTAL
2901 International Lane Madison, WI 53704
608-242-7779 1-800-446-0679 Fax: 608-242-5664
Web Address: www.msa-ps.com

© MSA Professional Services, Inc.

EROSION CONTROL PLAN

MORGAN / SHERIFF RESIDENCE
5404 LAKE MENDOTA DRIVE
CITY OF MADISON, DANE COUNTY, WI

FILE NO. 06344002

SHEET 2

CONSTRUCTION SITE EROSION CONTROL REQUIREMENTS

1.) SECTION NR216.46 OF WISCONSIN STATE ADMINISTRATIVE CODE IDENTIFIES REQUIREMENTS FOR CONSTRUCTION SITE AND POST-CONSTRUCTION EROSION CONTROL. IT IS THE INTENT OF THESE PLANS TO SATISFY THESE REQUIREMENTS. THE METHODS AND STRUCTURES USED TO CONTROL EROSION SHALL BE THE RESPONSIBILITY OF THE CONTRACTOR. CONTRACTOR SHALL IMPLEMENT AN APPROPRIATE MEANS OF CONTROLLING EROSION DURING SITE OPERATION AND UNTIL THE VEGETATION IS RE-ESTABILISHED. ADJUSTMENTS TO THE CONTROL SYSTEM SHALL BE MADE AS REQUIRED.

2.) ALL WORK SHALL BE IN ACCORDANCE WITH THE LATEST EDITION OF THE WISCONSIN DNR'S CONSERVATION PRACTICE STANDARDS. THESE STANDARDS ARE PERIODICALLY UPDATED AND IT IS THE CONTRACTOR'S RESPONSIBILITY TO OBTAIN AND REFERENCE THE MOST RECENTLY RELEASED STANDARD.

3.) THIS INFORMATION IS ONLY ONE PART OF THE OVERALL EROSION CONTROL REQUIREMENTS. ADDITIONAL REQUIREMENTS MAY ALSO BE SHOWN ON THE CONTRACT DRAWINGS AND IN THE ACCOMPANYING SPECIFICATIONS.

4.) ADDITIONAL EROSION CONTROL MEASURES, AS REQUESTED IN WRITING BY THE STATE OR LOCAL INSPECTORS, OR THE OWNER'S ENGINEER, SHALL BE INSTALLED WITHIN 24 HOURS.

5.) THE AREA OF EROSIVE LAND EXPOSED TO THE ELEMENTS BY GRUBBING, EXCAVATION, TRENCHING, BORROW AND FILL OPERATIONS AT ANY ONE TIME SHALL BE MINIMIZED TO THE MAXIMUM EXTENT PRACTICABLE. FOR ANY DISTURBED AREA THAT REMAINS INACTIVE FOR GREATER THAN 7 WORKING DAYS, OR WHERE GRADING WORK EXTENDS BEYOND THE PERMANENT SEEDING DEADLINES, THE SITE MUST BE TREATED WITH TEMPORARY STABILIZATION MEASURES SUCH AS SOIL TREATMENT, TEMPORARY SEEDING AND/OR MULCHING. ALL DISTURBED AREAS SHALL BE TREATED WITH PERMANENT STABILIZATION MEASURES WITHIN 3 WORKING DAYS OF FINAL GRADING.

6.) ALL EROSION CONTROL MEASURES AND STRUCTURES SERVING THE SITE MUST BE INSPECTED AT LEAST WEEKLY OR WITHIN 24 HOURS OF THE TIME 0.5 INCHES OF RAIN HAS OCCURRED. ALL NECESSARY REPAIR AND MAINTENANCE WILL BE DONE AT THIS INSPECTION TIME.

7.) ALL EROSION CONTROL DEVICES AND/OR STRUCTURES SHALL BE PROPERLY INSTALLED PRIOR TO CLEARING AND GRUBBING OPERATIONS WITHIN THEIR RESPECTIVE DRAINAGE AREAS. THESE SHALL BE PROPERLY MAINTAINED FOR MAXIMUM EFFECTIVENESS UNTIL VEGETATION IS RE-ESTABLISHED.

8.) ALL EROSION CONTROL DEVICES SHALL BE PROPERLY INSTALLED PRIOR TO ANY SOIL DISTURBANCE.

9.) ANY SLOPES STEEPER THAN 3H:1V SHALL BE STAKED WITH EROSION CONTROL FABRIC UNLESS INDICATED ON THE PLAN.

10.) ALL WASTE AND UNUSED BUILDING MATERIALS (INCLUDING GARBAGE, DEBRIS, CLEANING WASTES, WASTEWATER, TOXIC MATERIALS, OR HAZARDOUS MATERIALS) SHALL BE PROPERLY DISPOSED OF AND NOT ALLOWED TO BE CARRIED OFF-SITE BY RUNOFF OR WIND.

11.) WIND EROSION SHALL BE KEPT TO A MINIMUM DURING CONSTRUCTION. WATERING, MULCH, OR A TACKING AGENT MAY BE REQUIRED TO PROTECT NEARBY RESIDENCES AND WATER RESOURCES.

12.) CHANNELIZED RUNOFF ENTERING THE PROJECT SITE FROM ADJOINING LANDS SHALL BE DIVERTED THROUGH NATURALLY OR ARTIFICIALLY EROSION-RESISTANT CONVEYANCES. IF CHANNELIZED RUNOFF CANNOT BE DIVERTED, SITE BEST MANAGEMENT PRACTICES MUST ACCOUNT FOR THE ADDITIONAL FLOW RATES AND EROSION POTENTIAL THAT SUCH RUNOFF PRESENTS.

13.) THE CONTRACTOR SHALL TAKE ALL POSSIBLE PRECAUTIONS TO PREVENT SOILS FROM BEING TRACKED ONTO PUBLIC OR PRIVATE ROADWAYS. PAVED SURFACES ADJACENT TO CONSTRUCTION SITE VEHICLE ACCESS SHALL BE SWEPT AND/OR SCRAPED (NOT FLUSHED) PERIODICALLY TO REMOVE SOIL, DIRT, AND/OR DUST.

14.) EROSION CONTROLS SHALL BE INSTALLED ON THE DOWNSTREAM SIDE OF TEMPORARY STOCKPILES. ANY SOIL STOCKPILE THAT REMAINS FOR MORE THAN 30 DAYS SHALL BE COVERED OR TREATED WITH STABILIZATION PRACTICES SUCH AS TEMPORARY OR PERMANENT SEEDING AND MULCHING. ALL STOCK PILES SHALL BE PLACED AT LEAST 75 FEET FROM STREAMS OR WETLANDS.

15.) ADDITIONAL EROSION CONTROL FOR UTILITY CONSTRUCTION (STORM SEWER, SANITARY SEWER, WATER MAIN, ETC.) SHALL INCLUDE THE FOLLOWING:

a. PLACE EXCAVATED TRENCH MATERIAL ON THE HIGH SIDE OF THE TRENCH.
b. BACKFILL, COMPACT, AND STABILIZE THE TRENCH IMMEDIATELY AFTER PIPE CONSTRUCTION.
c. DISCHARGE OF TRENCH WATER OR DEWATERING EFFLUENT MUST BE PROPERLY TREATED TO REMOVE SEDIMENT IN ACCORDANCE WITH THE WDNR CONSERVATION PRACTICE STANDARD 1061 - DEWATERING OR A SUBSEQUENT WDNR DEWATERING STANDARD PRIOR TO DISCHARGE INTO A STORM SEWER, DITCH, DRAINAGEWAY, OR WETLAND OR LAKE.

16.) ALL DRAINAGE CULVERTS, STORM DRAIN INLETS, MANHOLES, OR ANY OTHER EXISTING STRUCTURES THAT COULD BE DAMAGED BY SEDIMENTATION SHALL BE PROTECTED ACCORDING TO THE VARIOUS METHODS PROVIDED IN THE PRINTED CONSERVATION PRACTICE STANDARDS.

17.) ANY SOIL EROSION THAT OCCURS AFTER FINAL GRADING AND/OR STABILIZATION MUST BE REPAIRED AND THE STABILIZATION WORK REDONE.

18.) DURING THE FIRST SIX WEEKS AFTER INITIAL STABILIZATION OF A DISTURBED WATERING OF ALL NEWLY SEEDED AND MULCHED AREAS SHALL BE PROVIDED WHENEVER 7 DAYS ELAPSE WITHOUT A RAIN EVENT.

19.) WHEN THE DISTURBED AREA HAS BEEN STABILIZED BY PERMANENT VEGETATION OR OTHER MEANS, TEMPORARY BMP'S SUCH AS SILT FENCES, STRAW BALES, AND SEDIMENT TRAPS SHALL BE REMOVED AND THESE AREAS STABILIZED.

20.) ALL TEMPORARY BEST MANAGEMENT PRACTICES SHALL BE MAINTAINED UNTIL THE SITE IS STABILIZED.

21.) ALL DISTURBED AREAS SHALL BE PERMANENTLY STABILIZED WITH SEED AND MULCH UNLESS OTHERWISE SPECIFIED. A MINIMUM OF FOUR INCHES OF TOPSOIL SHALL BE APPLIED TO ALL AREAS TO BE SEEDED OR SODDED.

22.) SHOULD DEWATERING OF THE FOUNDATION EXCAVATION BE NECESSARY, THE DEWATERING SHALL BE CONDUCED IN ACCORDANCE WITH WDNR CONSERVATION PRACTICE STANDARD 1061 AND CITY OF MADISON ORDINANCE CHAPTER 37.10(3). WATER PUMPED FROM DEWATERING PITS SHALL BE FILTERED THROUGH A GEOTEXTILE BAG AND THEN ROUTED INTO THE TEMPORARY SEDIMENT TRAP PRIOR TO EXITING THE SITE.

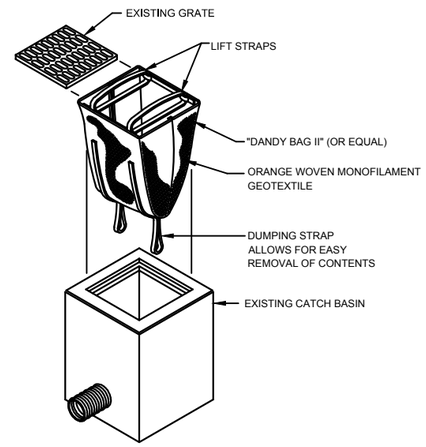

MAINTENANCE REQUIREMENT:
FOLLOWING EACH RUNOFF EVENT, MONITOR AND, IF NECESSARY, REMOVE ALL ACCUMULATED SEDIMENT & DEBRIS FROM THE UNIT AFTER THE HEIGHT OF THE ACCUMULATED MATERIAL REACHES 1/3 OF THE HEIGHT OF THE SEDIMENT BAG.

CATCH BASIN SEDIMENT BAG INSERT TYPE DETAIL

NTS

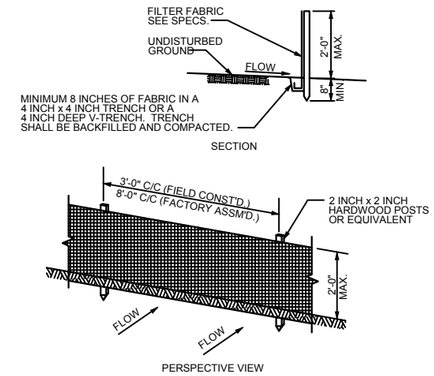

GENERAL NOTES:

1. ENDS OF FENCE SHALL BE TURNED UPSLOPE 1 TO 2 FEET IN ELEVATION TO PREVENT FLANKING.
2. STAPLE FABRIC WITH 1/2 INCH (MINIMUM) STAPLES TO THE UPSLOPE SIDE OF THE POSTS.
3. WHEN TWO SECTIONS OF FILTER FABRIC ADJOIN EACH OTHER THEY SHALL BE OVERLAPPED BY SIX INCHES AND FOLDED.

TYPICAL SILT FENCE INSTALLATION AT SITE PERIMETER DETAIL

NTS

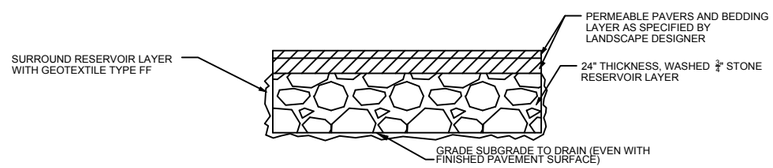

TYPICAL SECTION - PERMEABLE PAVEMENT

NTS

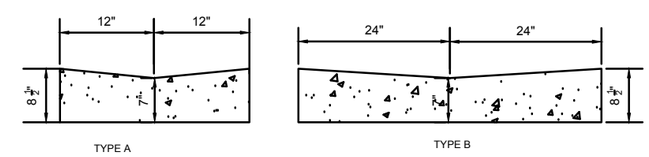

RIBBON CURB DETAIL

NTS

GENERAL NOTES:

INSTALL RIBBON CURB IN ACCORDANCE WITH CITY OF MADISON REQUIREMENTS

CONTRACTOR SHALL OBTAIN PERMIT FOR WORK IN THE ROW TO INSTALL DRIVEWAY, RIBBON CURB, AND GRADE

PROJECT NO.:	06344002	SCALE: AS SHOWN	NO.	DATE	REVISION	BY
PROJECT DATE:	10/20/2015	DRAWN BY: TM	1	10/27/15	CITY OF MADISON PLANNING DEPARTMENT COMMENTS	TM
F.B. :	.	CHECKED BY: ES	.	.	.	.
.		.	.	.	.	.

PLOT DATE: 10/27/15, P:\6300s\6340s\6344\06344002\CADD\C3D\Design.dwg

Preliminary

MSA PROFESSIONAL SERVICES
TRANSPORTATION • MUNICIPAL
DEVELOPMENT • ENVIRONMENTAL
2901 International Lane Madison, WI 53704
608-242-7779 1-800-446-0679 Fax: 608-242-5664
Web Address: www.msa-ps.com
© MSA Professional Services, Inc.

EROSION CONTROL NOTES AND DETAILS

MORGAN / SHERIFF RESIDENCE
5404 LAKE MENDOTA DRIVE
CITY OF MADISON, DANE COUNTY, WI

FILE NO. 06344002
SHEET 3

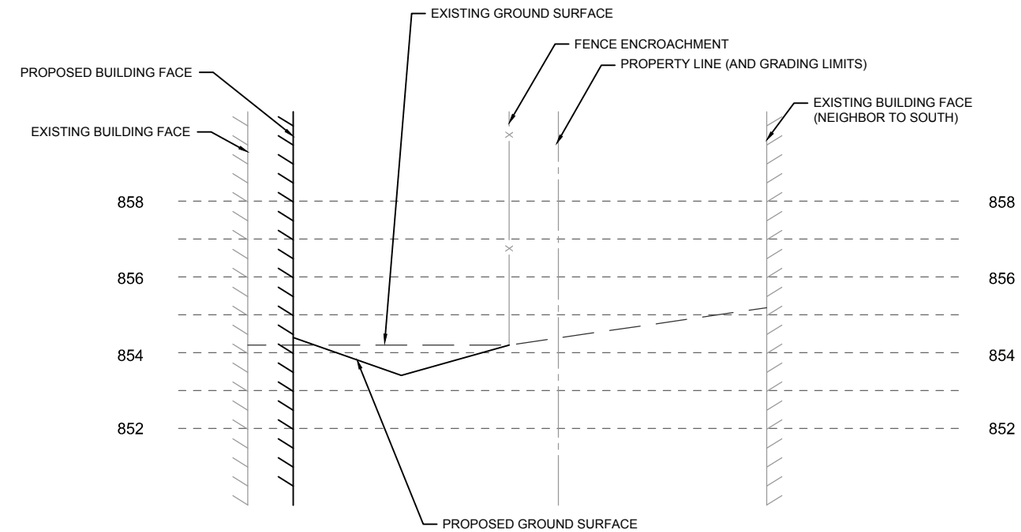

SWALE CROSS SECTION (C-C') - (SOUTH PROPERTY LINE)

HORIZONTAL - 1"=4'
VERTICAL - 1"=4'

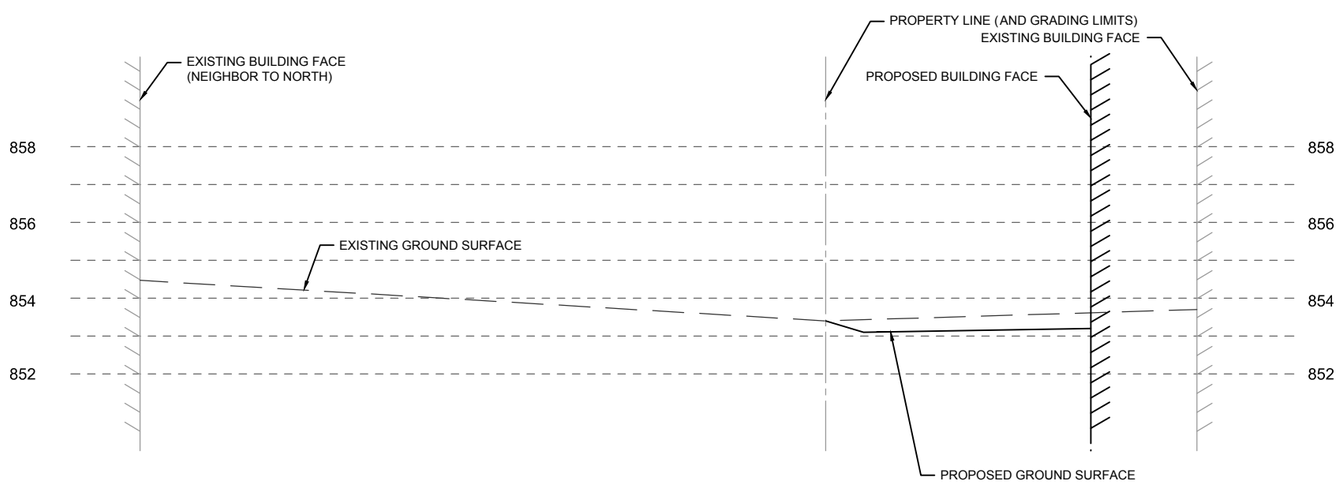

SWALE CROSS SECTION (A-A') - (NORTH PROPERTY LINE)

HORIZONTAL - 1"=4'
VERTICAL - 1"=4'

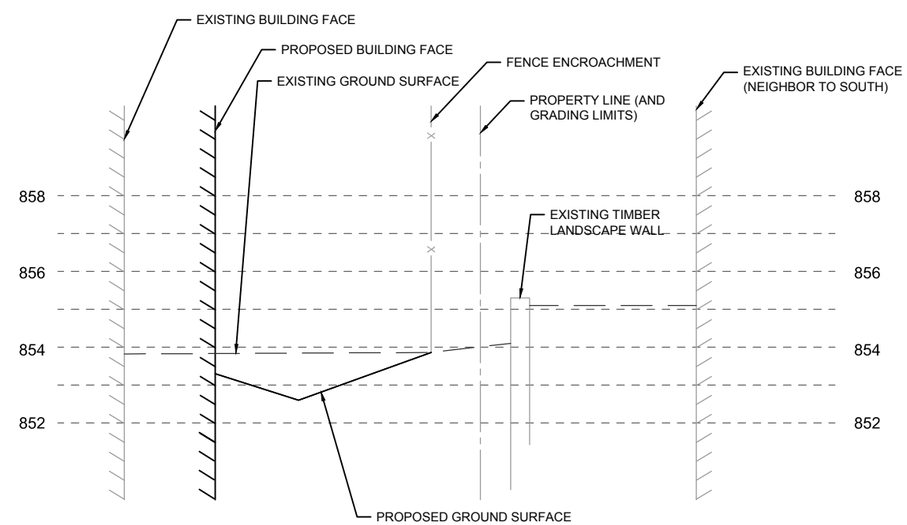

SWALE CROSS SECTION (B-B') - (SOUTH PROPERTY LINE)

HORIZONTAL - 1"=4'
VERTICAL - 1"=4'

PROJECT NO.: 06344002	SCALE: AS SHOWN	NO.	DATE	REVISION	BY
PROJECT DATE: 10/20/2015	DRAWN BY: TM	.	.		.
F.B. : .	CHECKED BY: ES	.	.		.
.		.	.		.

PLOT DATE: 10/20/15, P:\6300s\6340s\6344\06344002\CADD\C3D\Design.dwg

Preliminary

MSA PROFESSIONAL SERVICES
TRANSPORTATION • MUNICIPAL
DEVELOPMENT • ENVIRONMENTAL
2901 International Lane Madison, WI 53704
608-242-7779 1-800-446-0679 Fax: 608-242-5664
Web Address: www.msa-ps.com
© MSA Professional Services, Inc.

CROSS SECTION VIEWS

MORGAN / SHERIFF RESIDENCE
5404 LAKE MENDOTA DRIVE
CITY OF MADISON, DANE COUNTY, WI

FILE NO. 06344002
SHEET 4

MORGAN/SHERIFF RESIDENCE
STORMWATER MANAGEMENT

Exhibit 5 – Site Photography

Exhibit 5
Morgan/Sheriff Residence
Site Photography - August 28, 2015

South property line from street and looking towards lake

South property line looking towards lake
(View of landscape timber wall, fence, and downspout discharge on adjacent property)

South property line looking towards lake
(View of downspout discharge from adjacent property)

Exhibit 5
Morgan/Sheriff Residence
Site Photography - August 28, 2015

North property line looking towards lake

North property line looking towards street