CHARTER STREET REBUILD
UNIVERSITY OF WISCONSIN
DAYTON STREET BUILDING SIP-01
DSF# 092AL

SIP DRAWING LIST		
ISSUANCE 1	Sheet Number	Sheet Name
5.24.10	CD001	COVER DRAWING
5.24.10	CD002	SITE CONTEXT
5.24.10	C000	COVER SHEET
5.24.10	C001	SITE PLAN
5.24.10	C060	TRUCK AUTOTURN EXHIBIT MAXIMUM MAINTENANCE TRUCK
5.24.10	C061	TRUCK AUTOTURN EXHIBIT ANTICIPATED MAINTENANCE TRUCK
5.24.10	C201	DEMOLITION PLAN
5.24.10	C301	UNDERGROUND UTILITIES PLAN
5.24.10	C330	TYPICAL U/G UTILITY AND SEWER SECTIONS
5.24.10	C350	TYPICAL U/G UTILITY AND SEWER DETAILS
5.24.10	C401	FIRE WATER PLAN
5.24.10	C501	GRADING AND DRAINAGE PLAN
5.24.10	L001	LANDSCAPE PLAN
5.24.10	L010	LANDSCAPE DETAILS
5.24.10	A100	SITE REFERENCE PLAN
5.24.10	A101	BASEMENT FLOOR PLAN
5.24.10	A102	FIRST FLOOR PLAN
5.24.10	A103	SECOND FLOOR PLAN
5.24.10	A104	ROOF PLANS
5.24.10	A201	BUILDING ELEVATIONS
5.24.10	A202	BUILDING ELEVATIONS
5.24.10	A213	EXTERIOR RENDERINGS
5.24.10	A214	EXTERIOR RENDERINGS
5.24.10	A301	BUILDING SECTIONS
5.24.10	A302	BUILDING SECTIONS
5.24.10	A303	BUILDING SECTIONS
5.24.10	A311	WALL SECTIONS
5.24.10	E100	EXTERIOR LIGHTING PLAN
5.24.10	E400	DAYTON STREET BUILDING LUMINAIRE SCHEDULE, LEGEND AND ABBREVIATIONS
ADDITIONAL ATTACHMENTS: LUMINAIRE CUT SHEETS BOILER GENERAL ARRANGMENT DRAWING		

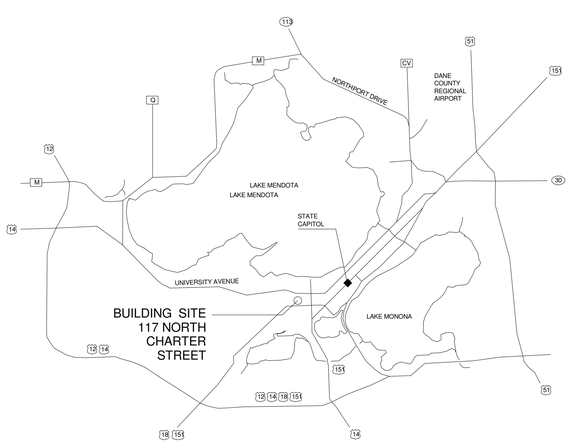

DAYTON STREET BUILDING
117 NORTH CHARTER STREET
MADISON, WI

5/25/2010 8:10:58 AM

PEC

POWER ENGINEERS COLLABORATIVE LLC
150 Sunny Slope Road
Suite 110
Brookfield, Wisconsin 53005
WWW.PECLLC.COM

PÖYRY
PÖYRY (APPLETON) LLC APPLETON, WISCONSIN

middough

Potter Lawson

PLI Project No:
2009.07.00

State of Wisconsin
Department of Administration
Division of State Facilities

Agency / Institution:
UNIVERSITY OF WISCONSIN SYSTEM

Project Title:
CHARTER STREET REBUILD

Project Location:
MADISON, WI

Sheet Title:
COVER DRAWING

Revisions:

No.	Date:	By:	Description:

Graphic Scale	
DSF Number	09A2L
Set Type	PR
Date Issued	05-24-10
Sheet Number	CD001

1

2

3

4

5

6

7

8

9

10

11

12

13

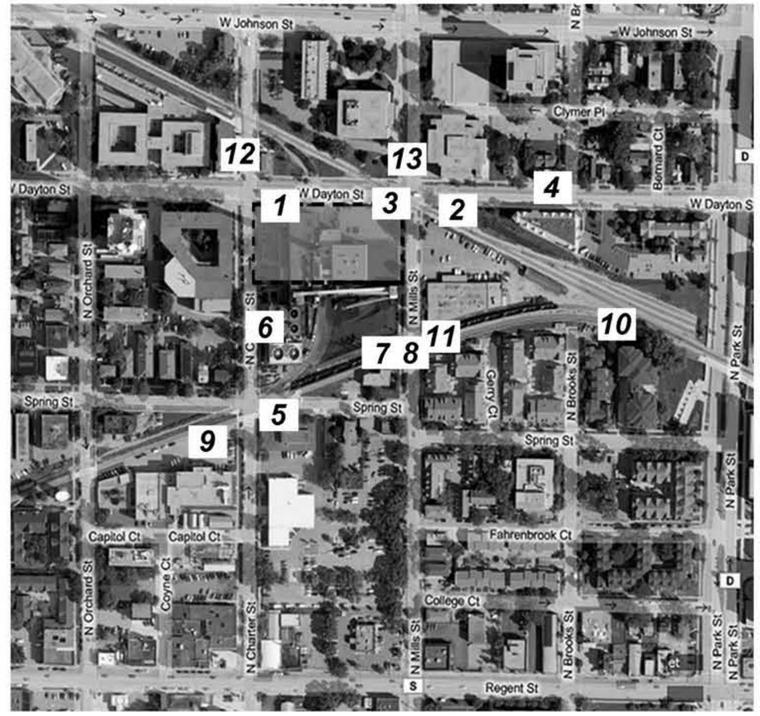

SURROUNDING CONTEXT IMAGES INCLUDED IN THE UDC - GDP SUBMISSION 5.12.10

5/24/2010 3:03:22 PM

PEC

POWER ENGINEERS COLLABORATIVE LLC
150 Sunny Slope Road
Suite 110
Brookfield, Wisconsin 53005
WWW.PECLLC.COM

PÖYRY
PÖYRY JAPPELTON LLC APPLETON, WISCONSIN

middough

Potter Lawson

PLI Project No:
2009.07.00

State of Wisconsin
Department of Administration
Division of State Facilities

Agency / Institution:
UNIVERSITY OF WISCONSIN SYSTEM

Project Title:
CHARTER STREET REBUILD

Project Location:
MADISON, WI

Sheet Title:
SITE CONTEXT

Revisions:

No.	Date:	By:	Description:

Graphic Scale	
DSF Number	09A2L
Set Type	PR
Date Issued	05-24-10
Sheet Number	CD002

GENERAL NOTES

UTILITIES AS SHOWN ARE APPROXIMATE AND ARE BASED ON DIGGERS HOTLINE. MARKOUTS PER TICKET NUMBER 20092910251, OBSERVED EVIDENCE AND RECORD DRAWINGS PROVIDED BY UTILITIY COMPANIES.

HORIZONTAL CONTROL AND BEARINGS ARE REFERENCED TO UW–MADISON CONTROL MONUMENTS #4 AND #3 ON THE WISCONSIN COUNTY COORDINATE SYSTEM, DANE COUNTY ZONE.

VERTICAL CONTROL BASED ON UW–MADISON CONTROL MONUMENTS #3, #4 AND #10 ON NAVD88 DATUM.

PROJECT LIMITS LIE OUTSIDE THE 100 YEAR FLOODPLAIN PER FEMA FLOOD INSURANCE RATE MAP 55025C0408G AND 55025C0409G DATED JANUARY 2, 2009.

FIELD SURVEY DATA ACQUIRED JULY AND AUGUST 2009 BY AYERES ASSOCIATES.

EXIST. RAILROAD RAILS ARE 112# & 115# ALONG MAIN LINE BETWEEN W. WASHINGTON AVE. AND CHARTER ST.; 80–85# ALONG SPUR BETWEEN RANDALL AVE. AND FIRST SWITCH TO THE NORTHEAST; 90# FROM SAID SWITCH NORTHEAST TO MAIN LINE. ALL NEW RAIL SHALL BE 115#.

STATIONING ON PLAN (NOT INCLUDED WITH THIS SIP)S REFERENCES THE DANE COUNTY COORDINATE SYSTEM. PROFILE REPRESENTS TOP OF RAIL.

SHEET LAYOUT

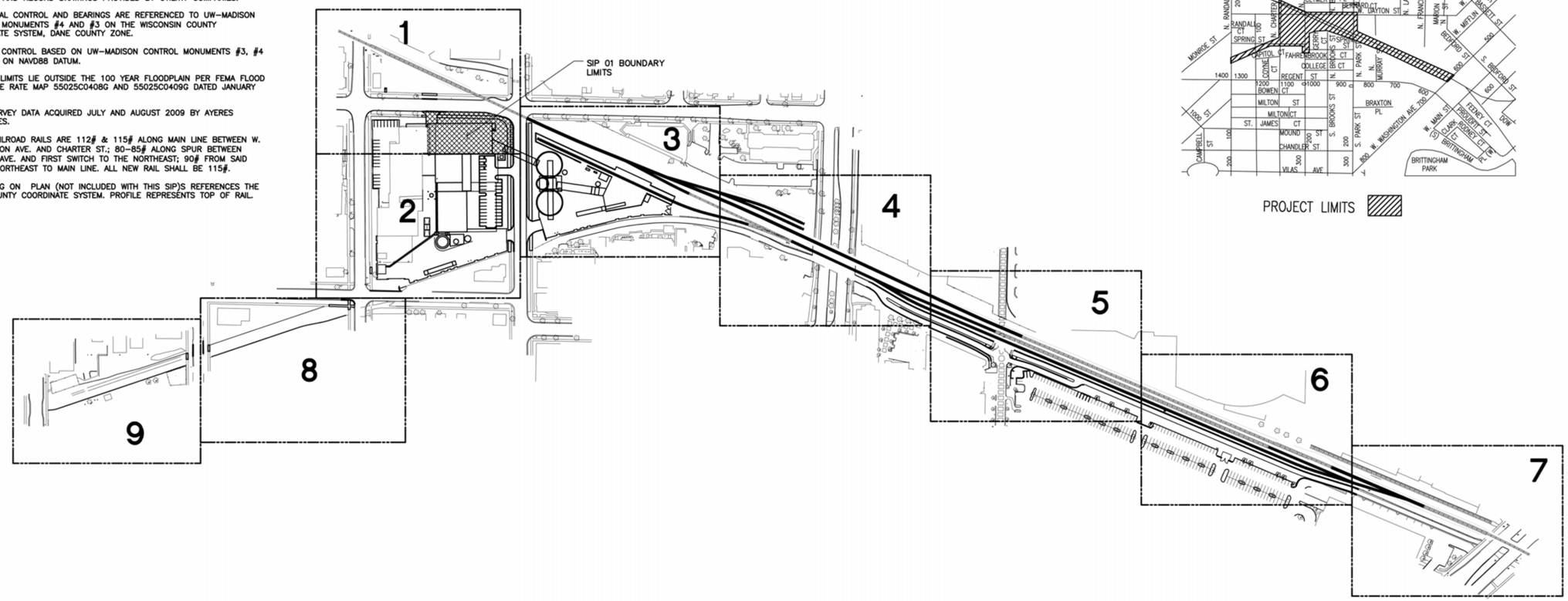

LOCATION MAP (NO SCALE)

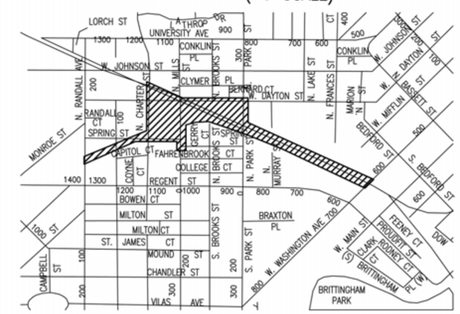

LEGEND

MH	MANHOLE
	INLET
WV	WATER VALVE
GV	GAS VALVE
	STREET LIGHT
	FIRE HYDRANT
	CONIFEROUS TREE
	DECIDUOUS TREE
	FENCE
	EDGE OF GRAVEL AREA
T	UNDERGROUND TELEPHONE
E	UNDERGROUND ELECTRIC
FO	UNDERGROUND FIBER OPTIC
SAN	UNDERGROUND SANITARY
G	UNDERGROUND GAS
W	UNDERGROUND WATER
CW	CHILLED WATER LINE
SS	STORM SEWER
STM	STEAM LINE
FW	FIRE WATER LINE
OH	OVERHEAD ELECTRIC
PS	OILY WATER & PROCESS SEWER
SIG	SIGNAL LINE
S	STEAM ACCESS STRUCTURE
SIGN	MISC. SINGLE POLE SIGN
B	CONCRETE/STEEL BOLLARD
	ELECTRIC PULLBOX
CP #18	SURVEY CONTROL POINT
	BENCH MARK
902.44	SPOT ELEVATION
26	INTERMEDIATE CONTOUR
25	INDEX CONTOUR
	¾" X 18" IRON STAKE SET
	¾" IRON STAKE FOUND
	CHISLED CROSS FOUND
	IRON PIPE FOUND (1" UNLESS OTHERWISE NOTED)
X	CHISLED CROSS SET
+	PK NAIL FOUND
	RIGHT–OF–WAY LINE
	LOT LINES
	EASEMENT LINES
	RR SWITCH
	RR SIGNAL BOX
	RR SIGNAL
	ELECTRIC METER
	GAS METER
	TRAFFIC SIGNAL LIGHT
	TRAFFIC SIGNAL W/LIGHT MAST ARM POWER POLE
GUY	W/LIGHT MAST ARM GUY WIRE ANCHOR
	POWER POLE
	TELEPHONE POLE
T	ABOVE GROUND TANK
	EDGE OF RR TIES
	RR TACKS
	EXISTING TO BE DEMOLISHED
	EXISTING TO BE DEMOLISHED BY OTHERS
GVT	GAS VENT
	BRUSHLINE
	ELECTRIC PEDESTAL
	PARKING METER
	POST INDICATOR VALVE
FDC	FIRE DEPT. CONNECTION
TP	TERMINAL POINT

CIVIL DRAWINGS LIST

PEC
POWER ENGINEERS COLLABORATIVE LLC
150 Sunny Slope Road
Suite 110
Brookfield, Wisconsin 53005
WWW.PECLLC.COM

PÖYRY
middough
Potter Lawson

State of Wisconsin
Department of Administration
Division of State Facilities

Agency / Institution:
UNIVERSITY OF WISCONSIN, MADISON

Project Title:
CHARTER STREET REBUILD

Project Location:
MADISON, WI.

Sheet Title:
COVER SHEET

Revisions:

No.	Date:	By:	Description:
1	03–10–10	MCI	GDP SUBMITTAL
2	03–12–10	MCI	EPC CONCEPT
3	04–15–10	MCI	EPC CONCEPT
4	05-24-10	MCI	SIP 01 SUBMITTAL

Graphic Scale	
DSF Number	09A2L
Set Type	PR
Date Issued	03–10–10
Sheet Number	C000

BENCHMARKS

Number	Elevation	Description
1	861.24	NW bolt of base or railroad signal
2	860.08	Chisled "+" in manhole rim
3	871.07	Brass disk in bridge
4	861.30	Chisled "+" in curb
5	863.59	Top operating nut of fire hydrant
6	860.88	Chisled "+" in sidewalk
7	864.45	Chisled "+" in curb
8	864.31	Top operating nut of fire hydrant
9	859.63	Chisled "+" in curb
10	865.12	Chisled "+" in se corner concrete porch
11	873.50	Top operating nut of fire hydrant

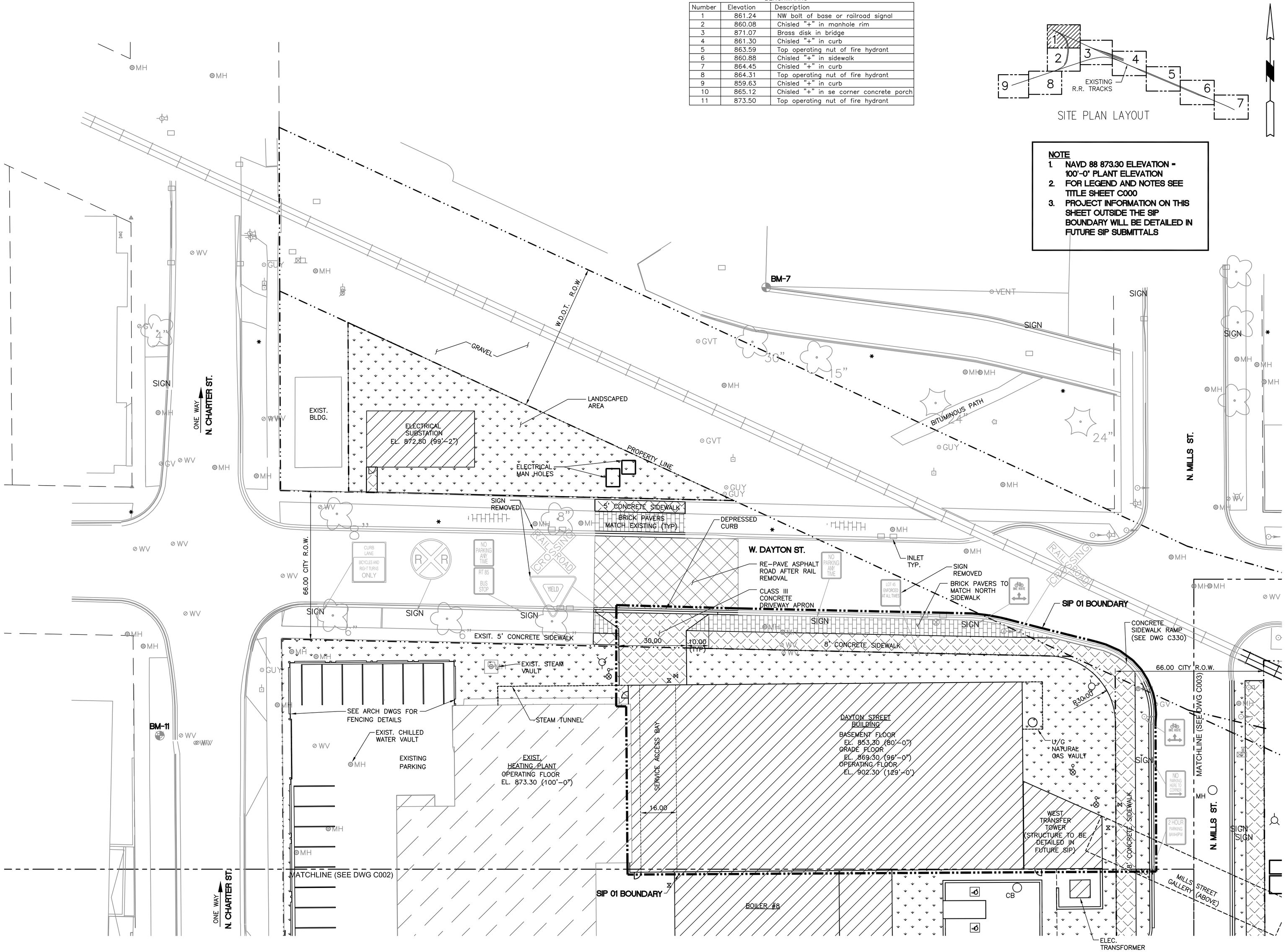

NOTE
1. NAVD 88 873.30 ELEVATION = 100'-0" PLANT ELEVATION
2. FOR LEGEND AND NOTES SEE TITLE SHEET C000
3. PROJECT INFORMATION ON THIS SHEET OUTSIDE THE SIP BOUNDARY WILL BE DETAILED IN FUTURE SIP SUBMITTALS

PEC
POWER ENGINEERS COLLABORATIVE LLC
150 Sunny Slope Road
Suite 110
Brookfield, Wisconsin 53005
WWW.PECLLC.COM
PÖYRY
PÖYRY (APPLETON) LLC APPLETON, WISCONSIN
middough
Potter Lawson

State of Wisconsin
Department of Administration
Division of State Facilities

Agency / Institution:
UNIVERSITY OF WISCONSIN, MADISON

Project Title:
CHARTER STREET REBUILD

Project Location:
MADISON, WI.

Sheet Title:
SITE PLAN

Revisions:

No.	Date:	By:	Description:
1	12-04-09	MCI	FOR REVIEW
2	01-15-10	MCI	FOR REVIEW
3	03-10-10	MCI	GDP SUBMITTAL
4	03-12-10	MCI	EPC CONCEPT
5	03-19-10	MCI	EPC CONCEPT
6	03-31-10	MCI	OCR SUBMITTAL
7	04-15-10	MCI	EPC CONCEPT
8	05-24-10	MCI	SIP 01 SUBMITTAL

Graphic Scale	10 0 20
DSF Number	09A2L
Set Type	PR
Date Issued	12-04-09
Sheet Number	C001

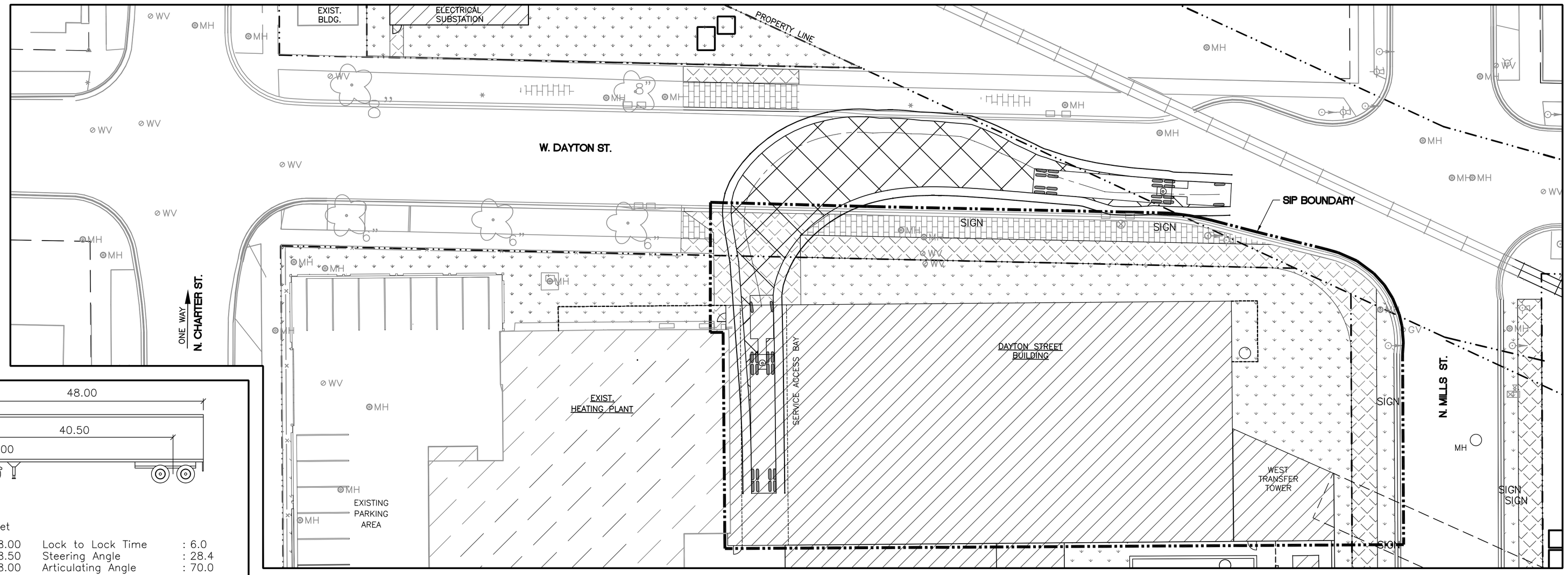

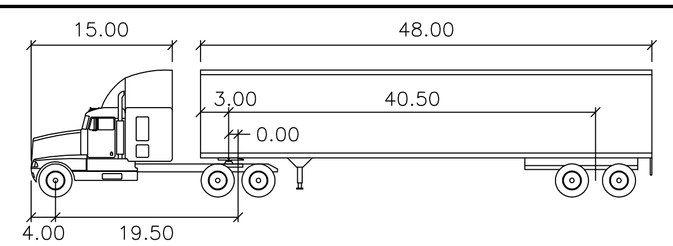

WB–62 feet

Tractor Width	: 8.00	Lock to Lock Time	: 6.0
Trailer Width	: 8.50	Steering Angle	: 28.4
Tractor Track	: 8.00	Articulating Angle	: 70.0
Trailer Track	: 8.50		

MAXIMUM TRUCK SIZE CAPABLE OF SERVICING DAYTON STREET BUILDING

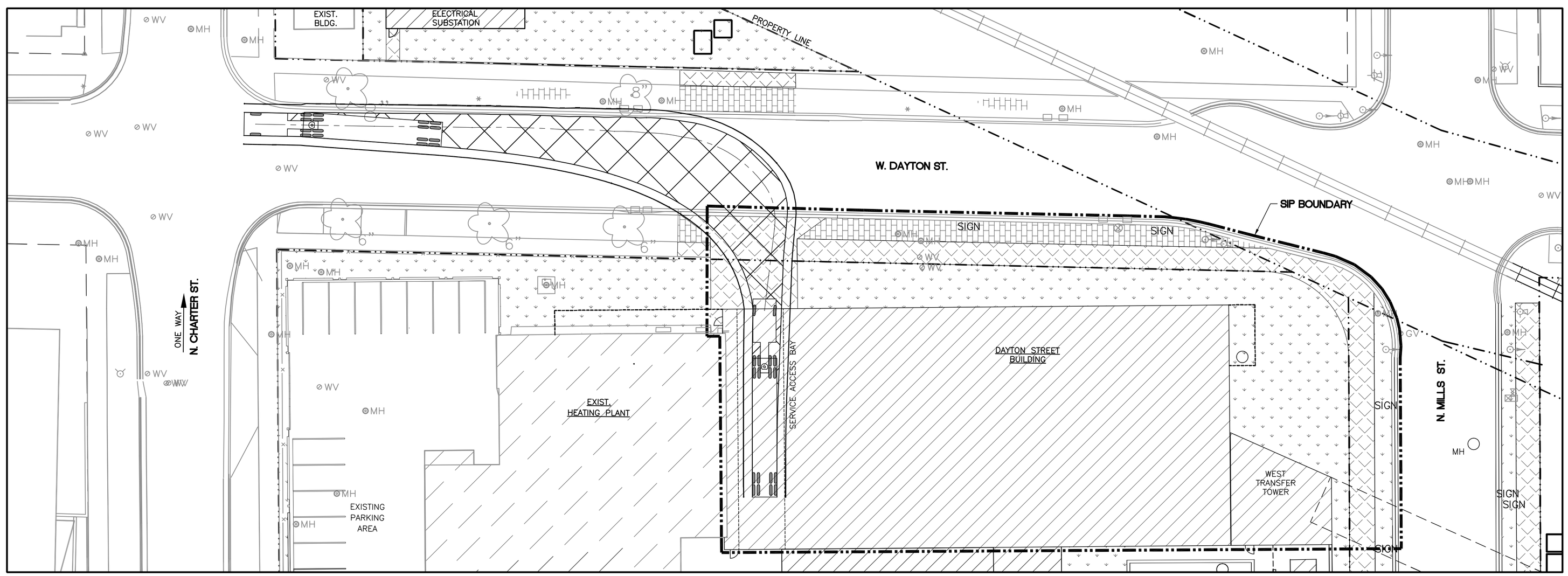

PEC

POWER ENGINEERS COLLABORATIVE LLC
150 Sunny Slope Road
Suite 110
Brookfield, Wisconsin 53005
WWW.PECLLC.COM

PÖYRY
PÖYRY (APPLETON) LLC APPLETON, WISCONSIN

middough

Potter Lawson

State of Wisconsin
Department of Administration
Division of State Facilities

Agency / Institution:
UNIVERSITY OF WISCONSIN, MADISON

Project Title:
CHARTER STREET REBUILD

Project Location:
MADISON, WI.

Sheet Title:
TRUCK AUTOTURN EXHIBIT
MAXIMUM MAINTENANCE TRUCK

Revisions:

No.	Date:	By:	Description:
1	05–24–10	MCI	SIP 01 SUBMITTAL

Graphic Scale	10 0 20
DSF Number	09A2L
Set Type	PR
Date Issued	05–24–10
Sheet Number	C060

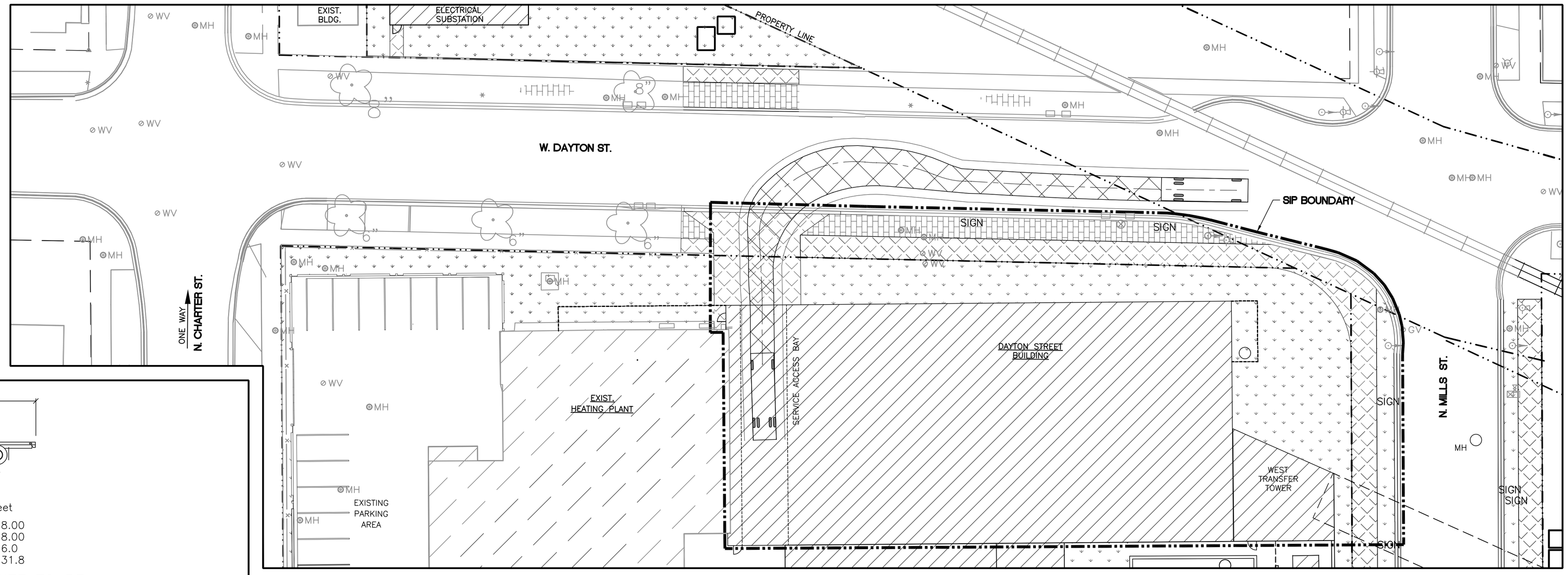

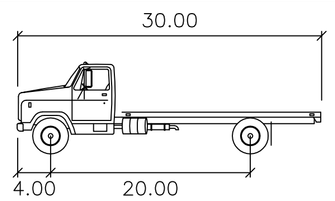

SU	feet
Width	: 8.00
Track	: 8.00
Lock to Lock Time	: 6.0
Steering Angle	: 31.8

ANTICIPATED TRUCK SIZE TO BE USED FOR THE MAINTENANCE OF DAYTON STREET BLDG EQUIPMENT

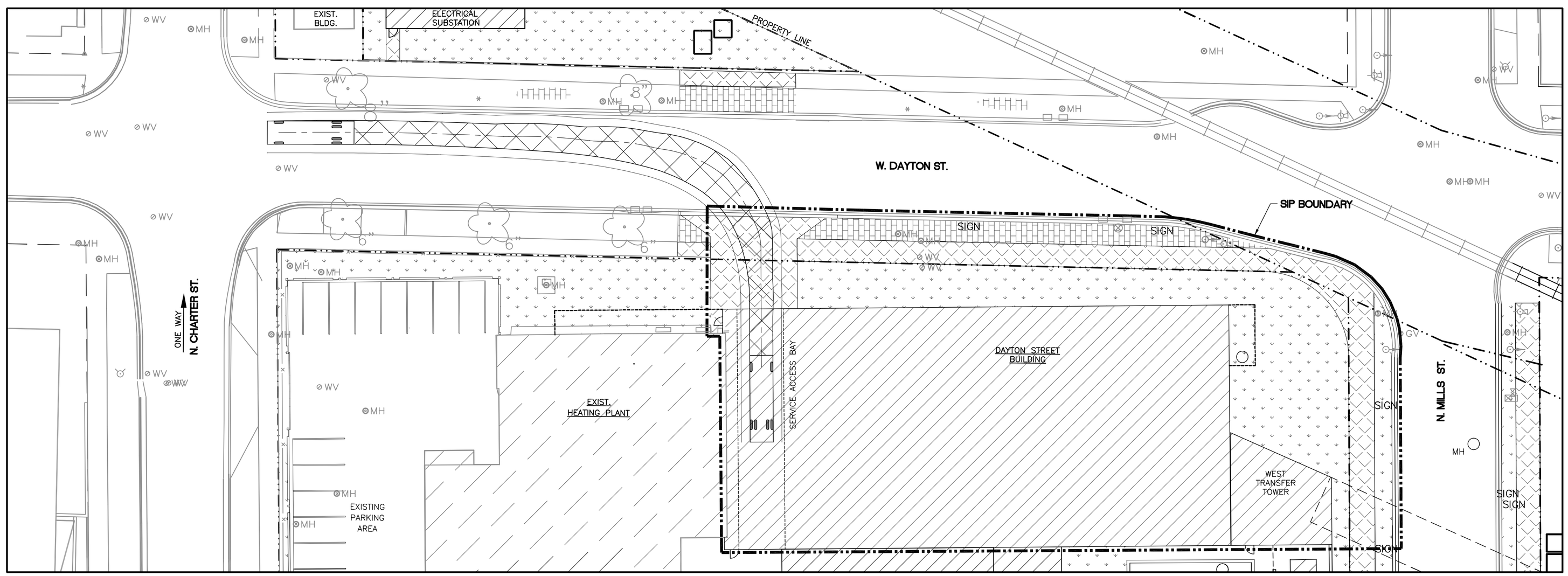

PEC

POWER ENGINEERS COLLABORATIVE LLC
150 Sunny Slope Road
Suite 110
Brookfield, Wisconsin 53005
WWW.PECLLC.COM

PÖYRY
PÖYRY (APPLETON) LLC APPLETON, WISCONSIN

middough

Potter Lawson

State of Wisconsin
Department of Administration
Division of State Facilities

Agency / Institution:
UNIVERSITY OF WISCONSIN, MADISON

Project Title:
CHARTER STREET REBUILD

Project Location:
MADISON, WI.

Sheet Title:
TRUCK AUTOTURN EXHIBIT
ANTICIPATED MAINTENANCE TRUCK

Revisions:

No.	Date:	By:	Description:
1	05-24-10	MCI	SIP 01 SUBMITTAL

Graphic Scale	10 0 20
DSF Number	09A2L
Set Type	PR
Date Issued	05-24-10
Sheet Number	C061

NOTE

1. FOR LEGEND AND NOTES SEE TITLE SHEET C000
2. PROJECT INFORMATION ON THIS SHEET OUTSIDE THE SIP BOUNDARY WILL BE DETAILED IN FUTURE SIP SUBMITTALS
3. FOR DEMOLITION, RELOCATION, AND MODIFICATION OF EXISTING UTILITIES, SEE DRAWINGS C301 THRU C309.
4. DEMO AND RECONSTRUCTION OF DAYTON STREET RAIL CROSSING SHALL BE COORDINATED SO IT DOES NOT INTERFERE WITH BIKE PATH DETOUR.

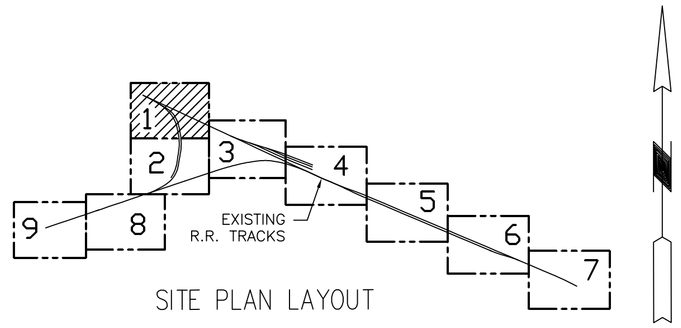

SITE PLAN LAYOUT

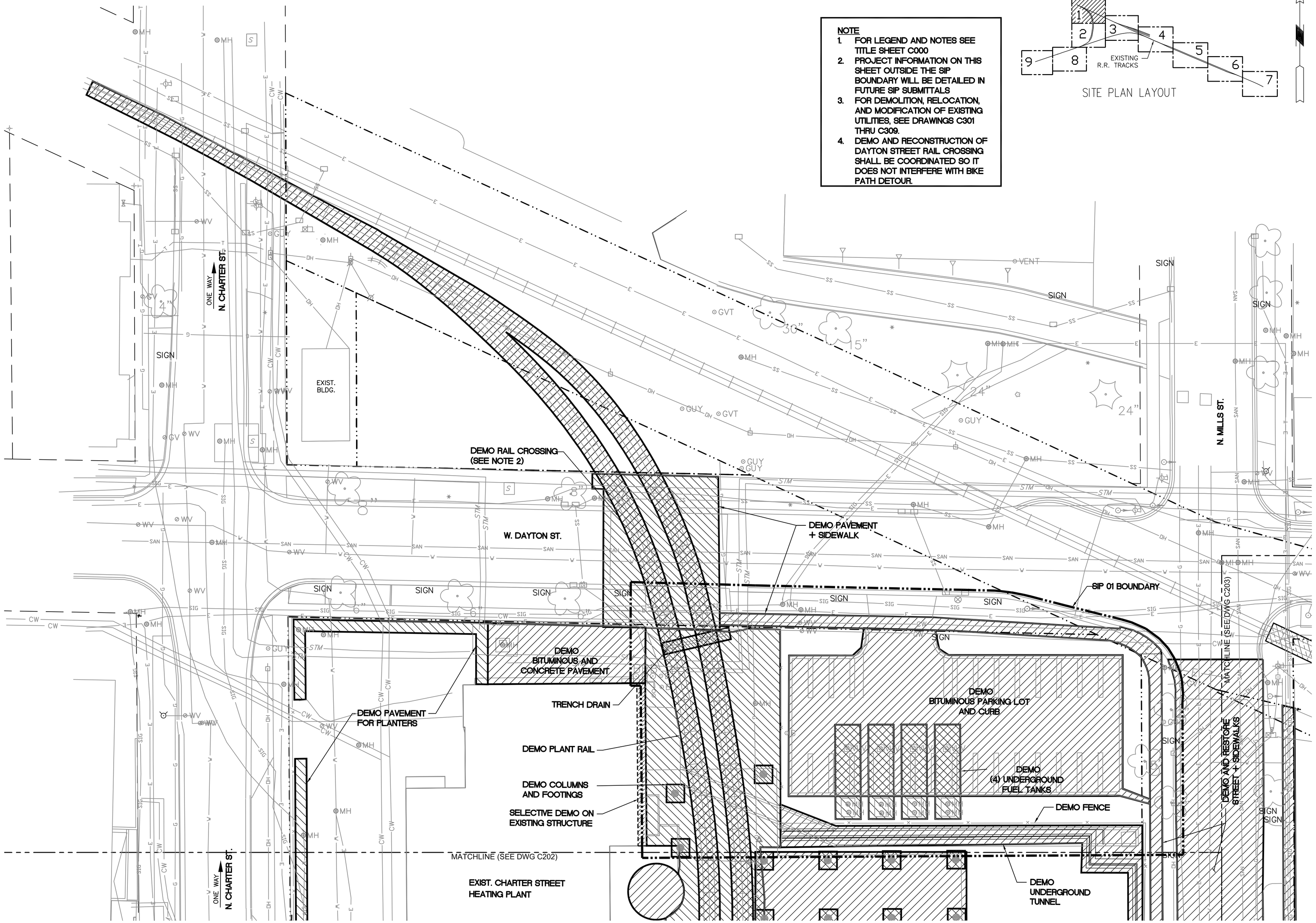

PEC
POWER ENGINEERS COLLABORATIVE LLC
150 Sunny Slope Road
Suite 110
Brookfield, Wisconsin 53005
WWW.PECLLC.COM

PÖYRY
PÖYRY (APPLETON) LLC APPLETON, WISCONSIN

middough

Potter Lawson

State of Wisconsin
Department of Administration
Division of State Facilities

Agency / Institution:
UNIVERSITY OF WISCONSIN, MADISON

Project Title:
CHARTER STREET REBUILD

Project Location:
MADISON, WI.

Sheet Title:
DEMOLITION PLAN

Revisions:

No.	Date:	By:	Description:
1	01–20–10	MCI	FOR REVIEW
2	03–10–10	MCI	GDP SUBMITTAL
3	03–12–10	MCI	EPC CONCEPT
4	03–19–10	MCI	EPC CONCEPT
5	03–31–10	MCI	OCR SUBMITTAL
6	04–15–10	MCI	EPC CONCEPT
7	05–24–10	MCI	SIP 01 SUBMITTAL

Graphic Scale	10 0 20
DSF Number	09A2L
Set Type	PR
Date Issued	01–20–10
Sheet Number	C201

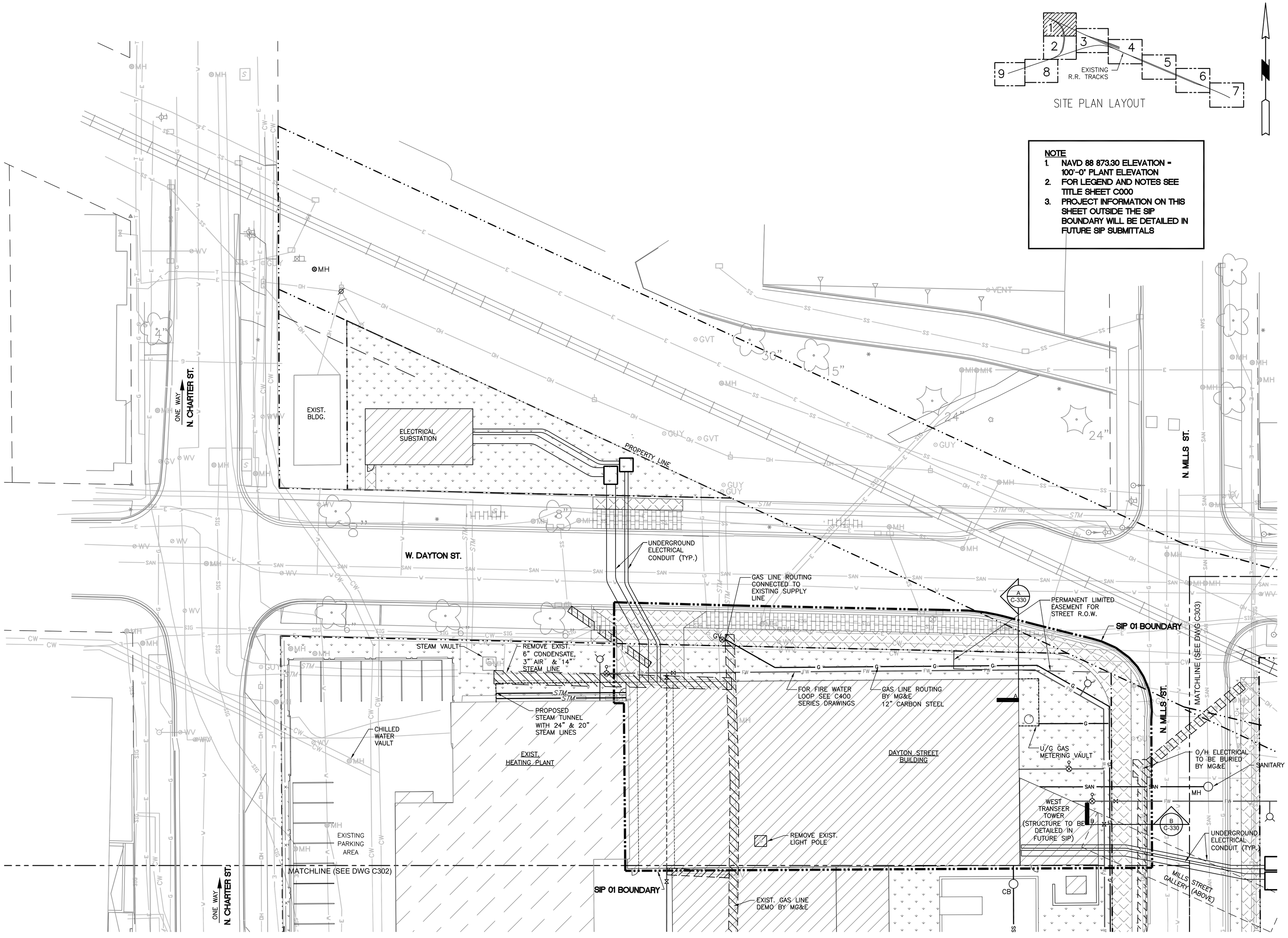

PEC
POWER ENGINEERS COLLABORATIVE LLC
150 Sunny Slope Road
Suite 110
Brookfield, Wisconsin 53005
WWW.PECLLC.COM
PÖYRY
PÖYRY (APPLETON) LLC APPLETON, WISCONSIN
middough
Potter Lawson

State of Wisconsin
Department of Administration
Division of State Facilities

Agency / Institution:
UNIVERSITY OF WISCONSIN, MADISON

Project Title:
CHARTER STREET REBUILD

Project Location:
MADISON, WI.

Sheet Title:
UNDERGROUND UTILITIES PLAN

Revisions:

No.	Date:	By:	Description:
1	03-10-10	MCI	GDP SUBMITTAL
2	03-12-10	MCI	EPC CONCEPT
3	03-19-10	MCI	EPC CONCEPT
4	04-15-10	MCI	EPC CONCEPT
5	05-24-10	MCI	SIP 01 SUBMITTAL

Graphic Scale	10 0 20
DSF Number	09A2L
Set Type	PR
Date Issued	03-10-10
Sheet Number	C301

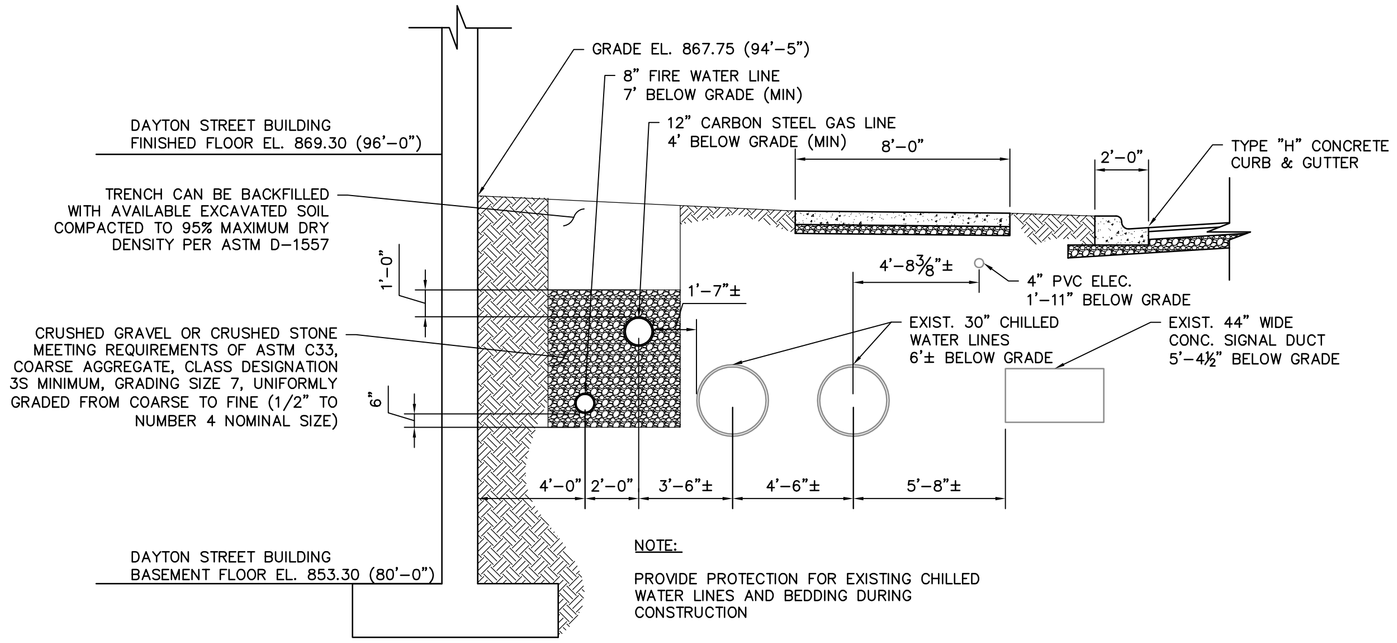

SECTION A-A
(1/4" = 1'-0")

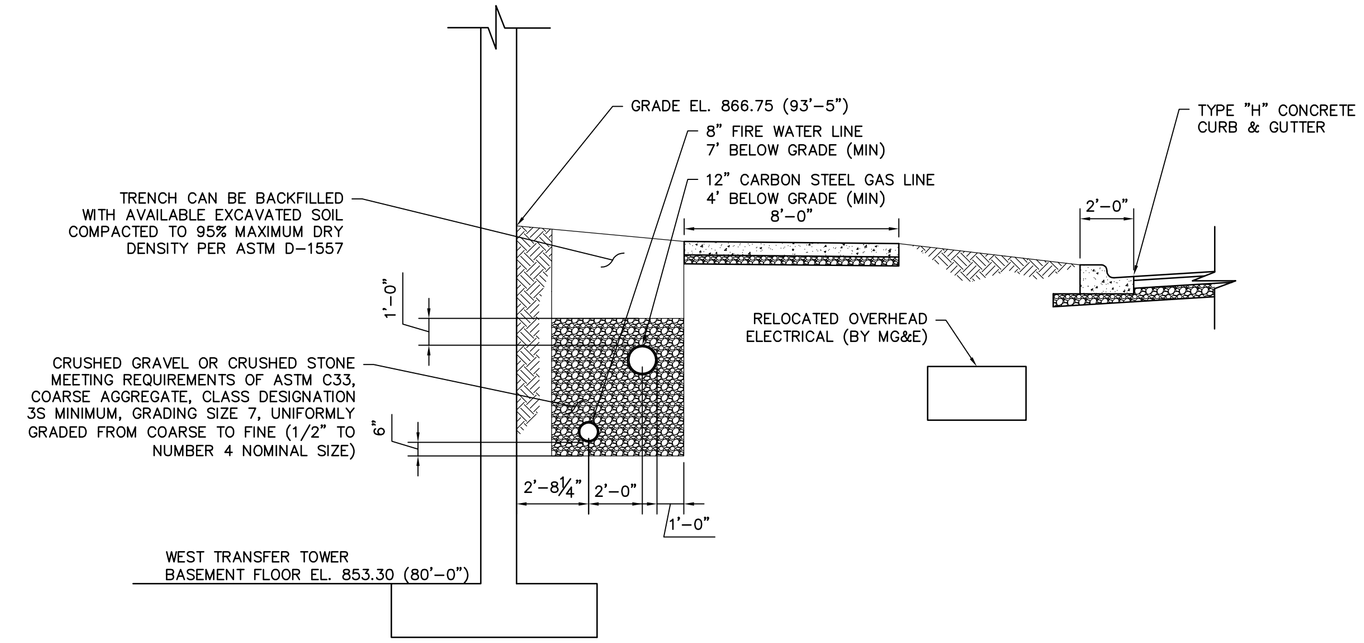

SECTION B-B
(1/4" = 1'-0")

PEC
POWER ENGINEERS
COLLABORATIVE LLC
150 Sunny Slope Road
Suite 110
Brookfield, Wisconsin 53005
WWW.PECLLC.COM

PÖYRY
PÖYRY (APPLETON) LLC APPLETON, WISCONSIN

middough

Potter Lawson

State of Wisconsin
Department of Administration
Division of State Facilities

Agency / Institution:
UNIVERSITY OF WISCONSIN, MADISON

Project Title:
CHARTER STREET REBUILD

Project Location:
MADISON, WI.

Sheet Title:
TYPICAL U/G UTILITY AND SEWER SECTIONS

Revisions:

No.	Date:	By:	Description:
1	05-24-10	MCI	SIP 01 SUBMITTAL

Graphic Scale	
DSF Number	09A2L
Set Type	PR
Date Issued	05-24-10
Sheet Number	C330

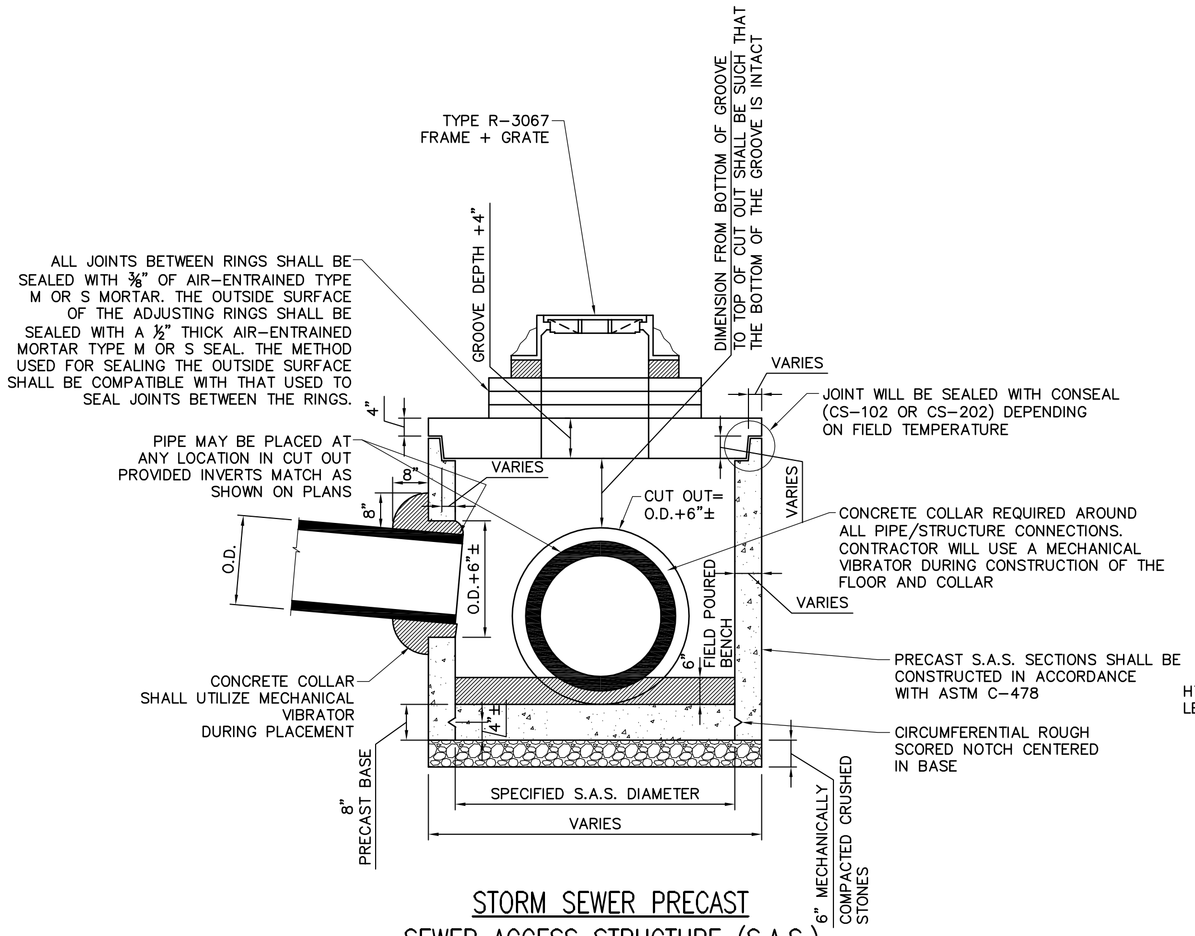

STORM SEWER PRECAST
SEWER ACCESS STRUCTURE (S.A.S.)
(THROUGH SECTION VIEW)

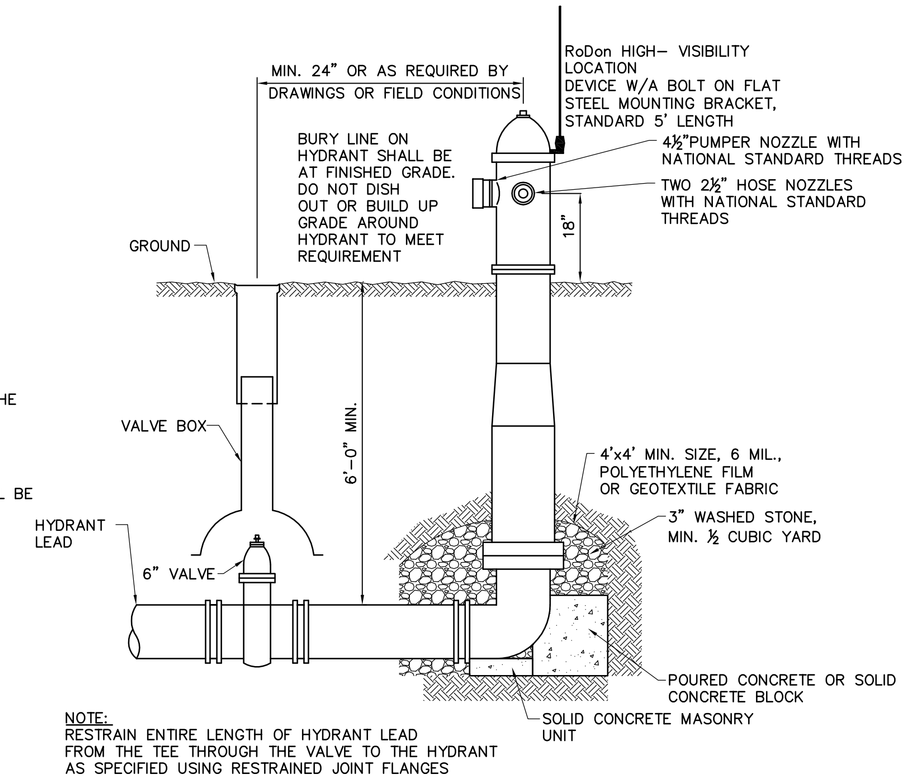

NOTE:
RESTRAIN ENTIRE LENGTH OF HYDRANT LEAD FROM THE TEE THROUGH THE VALVE TO THE HYDRANT AS SPECIFIED USING RESTRAINED JOINT FLANGES

TYPICAL HYDRANT INSTALLATION

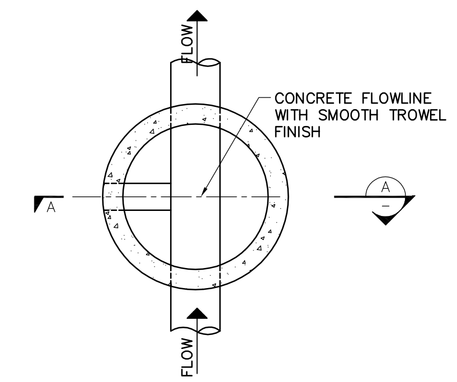

DETAIL "A"
SHOWING DROP INLET CONSTRUCTION
FOR SANITARY SEWER MAINS AND LATERALS

NOTES:
1. PRECAST S.A.S. SECTIONS SHALL BE CONSTRUCTED IN ACCORDANCE WITH ASTM C-478.

2. CENTERED (CONCENTRIC) CONE SHALL BE INSTALLED UNLESS OTHERWISE DIRECTED.

3. FLEXIBLE PIPE TO S.A.S. CONNECTOR REQUIRED PER STANDARD DETAIL B.

4. ALL BENCHES TO BE FIELD POURED CONCRETE WITH SMOOTH TROWEL FINISH. PRECAST BENCHES ONLY PERMITTED WITH PRIOR APPROVAL OF ENGINEER IN WRITING.

5. ALL JOINTS BETWEEN RINGS SHALL BE SEALED WITH ⅜" OF AIR-ENTRAINED TYPE M OR S MORTAR. THE OUTSIDE SURFACE OF THE ADJUSTING RINGS SHALL BE SEALED WITH A ½" THICK AIR-ENTRAINED MORTAR TYPE M OR S SEAL. THE METHOD USED FOR SEALING THE OUTSIDE SURFACE SHALL BE COMPATIBLE WITH THAT USED TO SEAL JOINTS BETWEEN THE RINGS.

6. PRECAST SANITARY SEWER ACCESS STRUCTURES FOR STREET RECONSTRUCTION PROJECTS AND FOR STREET EXCAVATION PERMITS REQUIRE PRECAST SHOP DRAWING APPROVAL FROM CITY ENGINEERING. PRIOR TO BEING FABRICATED BY THE MANUFACTURER. NO PRECAST SHOP DRAWINGS ARE REQUIRED FOR NEW CONSTRUCTION IN SUBDIVISION DEVELOPMENTS.

TOP VIEW

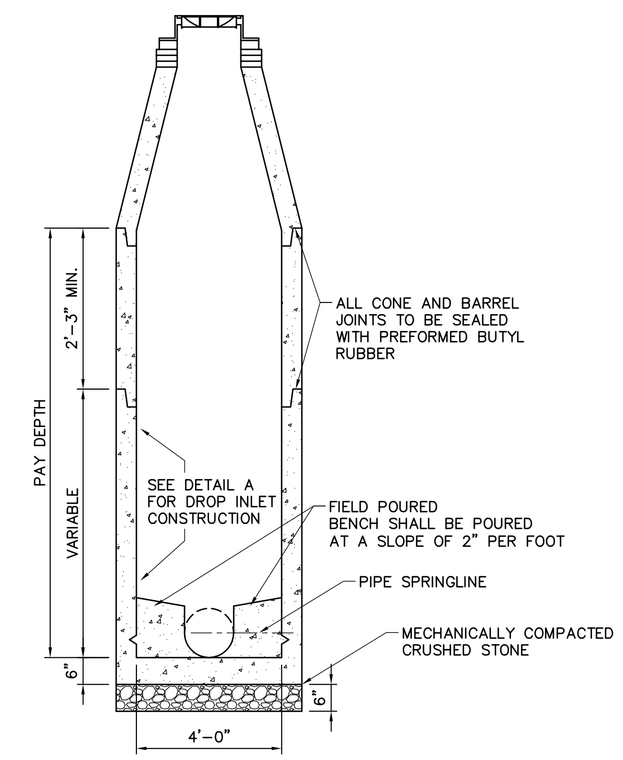

SECTION A-A

SANITARY SEWER
PRECAST SEWER ACCESS
STRUCTURE (S.A.S.)

NOTES:
1. S.A.S. CONNECTIONS FOR SANITARY SEWER MAINS SHALL BE MADE USING FLEXIBLE, WATERTIGHT CONNECTIONS SUCH AS KOR-N-SEAL I OR APPROVED EQUAL UNLESS DIRECTED OTHERWISE BY ENGINEER.

2. ALL STAINLESS STEEL ELEMENTS OF CONNECTOR SHALL BE TOTALLY NON-MAGNETIC SERIES 304 STAINLESS, EXCLUDING THE WORM SCREW FOR TIGHTENING THE STEEL BAND AROUND THE PIPE WHICH SHALL BE SERIES 305 STAINLESS. THE WORM SCREW FOR TIGHTENING THE STEEL BAND SHALL BE TORQUED BY A BREAK-AWAY TORQUE WRENCH AVAILABLE FOR THE PRECAST S.A.S. SUPPLIER AND SET FOR 60-70 INCH/LBS.

3. THE CONNECTOR SHALL BE INSTALLED IN THE S.A.S. WALL BY ACTIVATING THE EXPANDING MECHANISM IN STRICT ACCORDANCE WITH THE RECOMMENDATIONS OF THE CONNECTOR MANUFACTURER.

4. THE CONNECTOR SHALL BE A SIZE SPECIFICALLY DESIGNED FOR THE PIPE MATERIAL AND SIZE BEING UTILIZED ON THE PROJECT.

5. ALL COSTS SHALL BE CONSIDERED INCIDENTAL TO THE S.A.S. AND/OR PIPE. THE ENGINEER RESERVES THE RIGHT TO REQUIRE A "CONCRETE ENCASEMENT" CONNECTION AT NO ADDITIONAL EXPENSE IN THE EVENT OF DESIGN CHANGE.

6. FLEXIBLE, WATERTIGHT CONNECTIONS SHALL ALSO BE USED AS REQUIRED FOR STORM SEWER CONNECTIONS.

NOTE:
FOR STRAIGHT THROUGH PIPE ALIGNMENTS IN STORM SEWER ACCESS STRUCTURES THE MINIMUM DEGREE ALLOWED BETWEEN CUTOUTS SHALL BE 60°

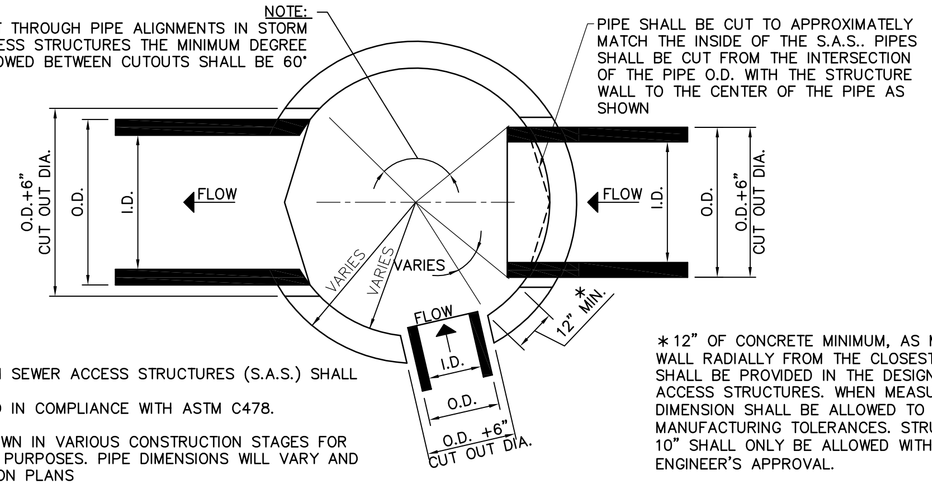

NOTES:
1. ALL STORM SEWER ACCESS STRUCTURES (S.A.S.) SHALL BE CONSTRUCTED IN COMPLIANCE WITH ASTM C478.

2. PIPES SHOWN IN VARIOUS CONSTRUCTION STAGES FOR ILLUSTRATIVE PURPOSES. PIPE DIMENSIONS WILL VARY AND ARE SHOWN ON PLANS

*12" OF CONCRETE MINIMUM, AS MEASURED ALONG THE INSIDE WALL RADIALLY FROM THE CLOSEST POINT BETWEEN CUTOUTS. SHALL BE PROVIDED IN THE DESIGN OF ALL PRECAST SEWER ACCESS STRUCTURES. WHEN MEASURED IN THE FIELD THIS DIMENSION SHALL BE ALLOWED TO BE 10" DUE TO MANUFACTURING TOLERANCES. STRUCTURES WITH LESS THAN 10" SHALL ONLY BE ALLOWED WITH THE CONSTRUCTION ENGINEER'S APPROVAL.

STORM SEWER PRECAST S.A.S.
(TOP VIEW)

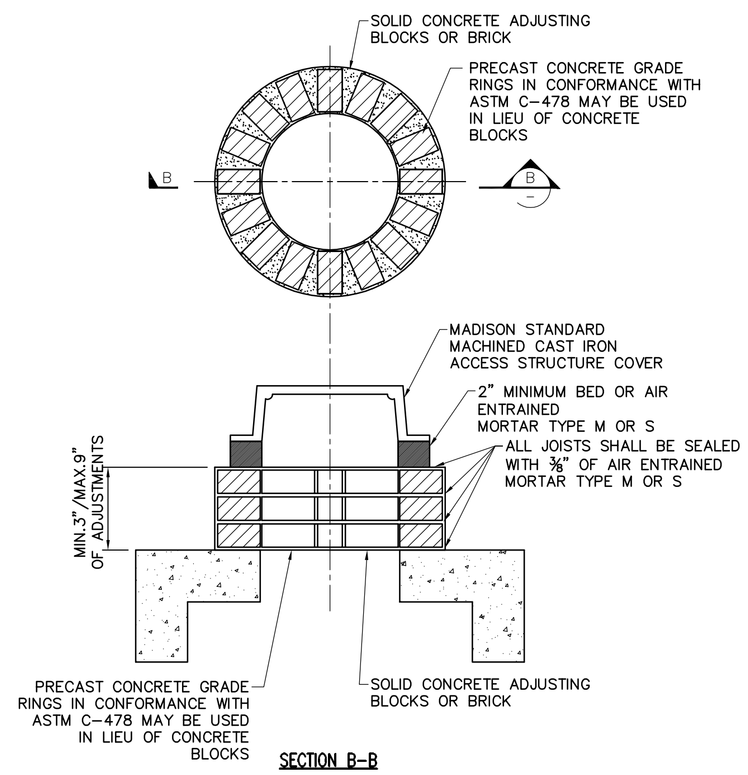

SECTION B-B

SEWER ACCESS STRUCTURE
CHIMNEY AND CASTING

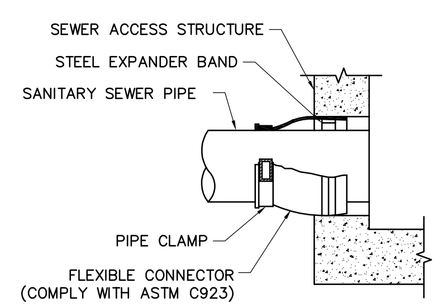

DETAIL "B"

FLEXIBLE PIPE TO S.A.S. CONNECTOR

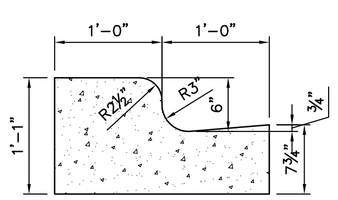

NOTES:
1. LATERAL CONTRACTION JOINTS SHALL BE PLACED AT INTERVALS OF NOT MORE THAN 15' AND NOT LESS THAN 6' IN LENGTH. THE JOINTS SHALL BE A MINIMUM OF 3" IN DEPTH.
2. EXPANSION JOINTS SHALL BE PLACED TRANSVERSALLY AT RADIUS POINTS ON CURVES OF RADIUS 200' OR LESS AND AT ANGLE POINTS, OR AS DIRECTED BY THE ENGINEER. THE EXPANSION JOINT SHALL BE ONE PIECE ASPHALTIC MATERIAL HAVING THE SAME DIMENSIONS AS CURB AND GUTTER AT THAT STATION AND BE ½" THICK.
3. IN ALL CASES, CONCRETE CURB AND GUTTER SHALL BE PLACED ON THOROUGHLY COMPACTED CRUSHED STONE.

TYPE 'G' CONCRETE CURB AND GUTTER

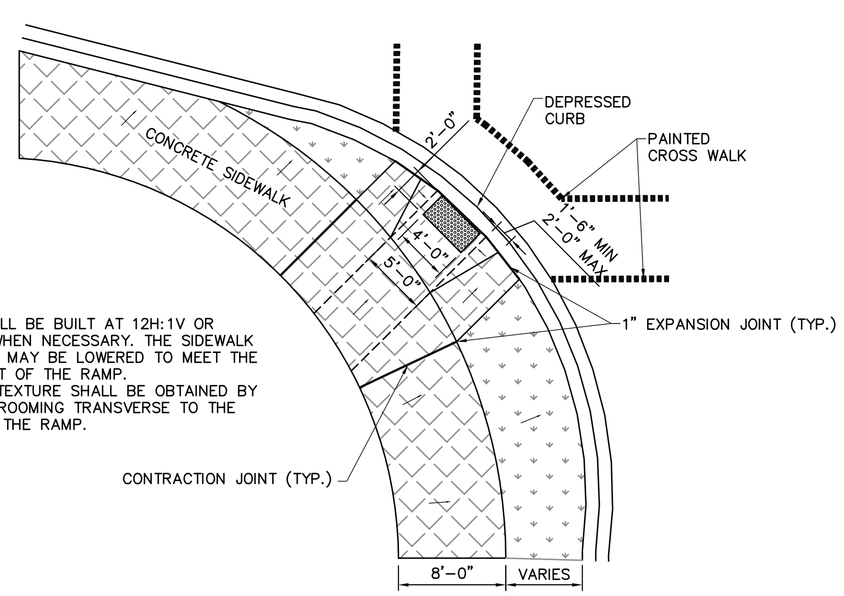

NOTES:
1. RAMP SHALL BE BUILT AT 12H:1V OR FLATTER WHEN NECESSARY. THE SIDEWALK ELEVATION MAY BE LOWERED TO MEET THE HIGH POINT OF THE RAMP.
2. SURFACE TEXTURE SHALL BE OBTAINED BY COARSE BROOMING TRANSVERSE TO THE SLOPE OF THE RAMP.

MODIFIED TYPE 1 RAMP
(AT N. MILLS AND W. DAYTON CROSSING)

PEC
POWER ENGINEERS COLLABORATIVE LLC
150 Sunny Slope Road
Suite 110
Brookfield, Wisconsin 53005
WWW.PECLLC.COM
PÖYRY
middough
Potter Lawson

State of Wisconsin
Department of Administration
Division of State Facilities

Agency / Institution:
UNIVERSITY OF WISCONSIN, MADISON

Project Title:
CHARTER STREET REBUILD

Project Location:
MADISON, WI.

Sheet Title:
TYPICAL U/G UTILITY AND SEWER DETAILS

Revisions:

No.	Date:	By:	Description:
1	05-24-10	MCI	SIP 01 SUBMITTAL

Graphic Scale	20 0 40
DSF Number	09A2L
Set Type	PR
Date Issued	05-24-10
Sheet Number	C350

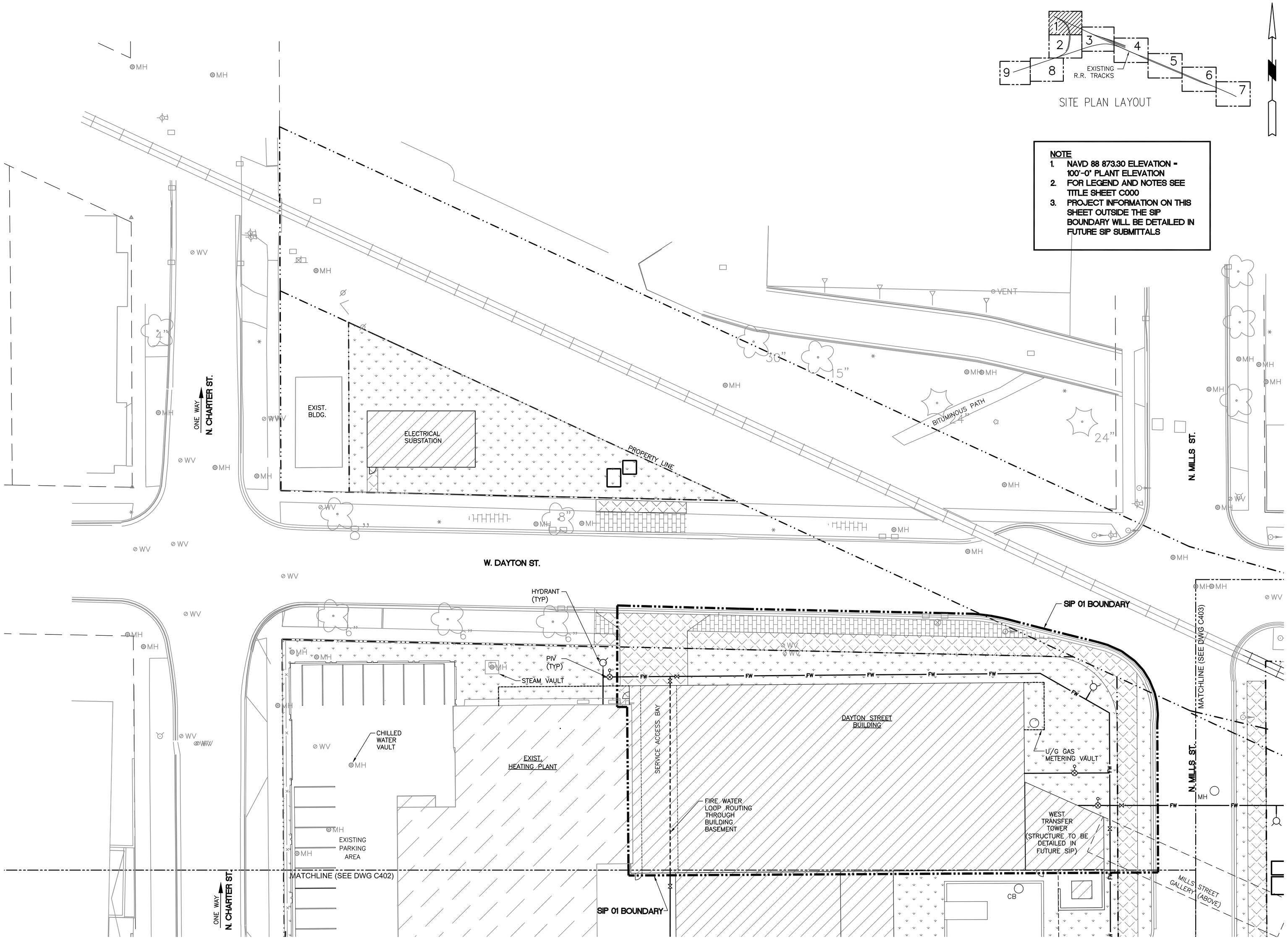

PEC

POWER ENGINEERS COLLABORATIVE LLC
150 Sunny Slope Road
Suite 110
Brookfield, Wisconsin 53005
WWW.PECLLC.COM

PÖYRY
middlough
Potter Lawson

State of Wisconsin
Department of Administration
Division of State Facilities

Agency / Institution:
UNIVERSITY OF WISCONSIN, MADISON

Project Title:
CHARTER STREET REBUILD

Project Location:
MADISON, WI.

Sheet Title:
FIRE WATER PLAN

Revisions:

No.	Date:	By:	Description:
1	03-10-10	MCI	GDP SUBMITTAL
2	03-12-10	MCI	EPC CONCEPT
3	03-19-10	MCI	EPC CONCEPT
4	04-15-10	MCI	EPC CONCEPT
5	05-24-10	MCI	SIP 01 SUBMITTAL

Graphic Scale	10 0 20
DSF Number	09A2L
Set Type	PR
Date Issued	03-10-10
Sheet Number	C401

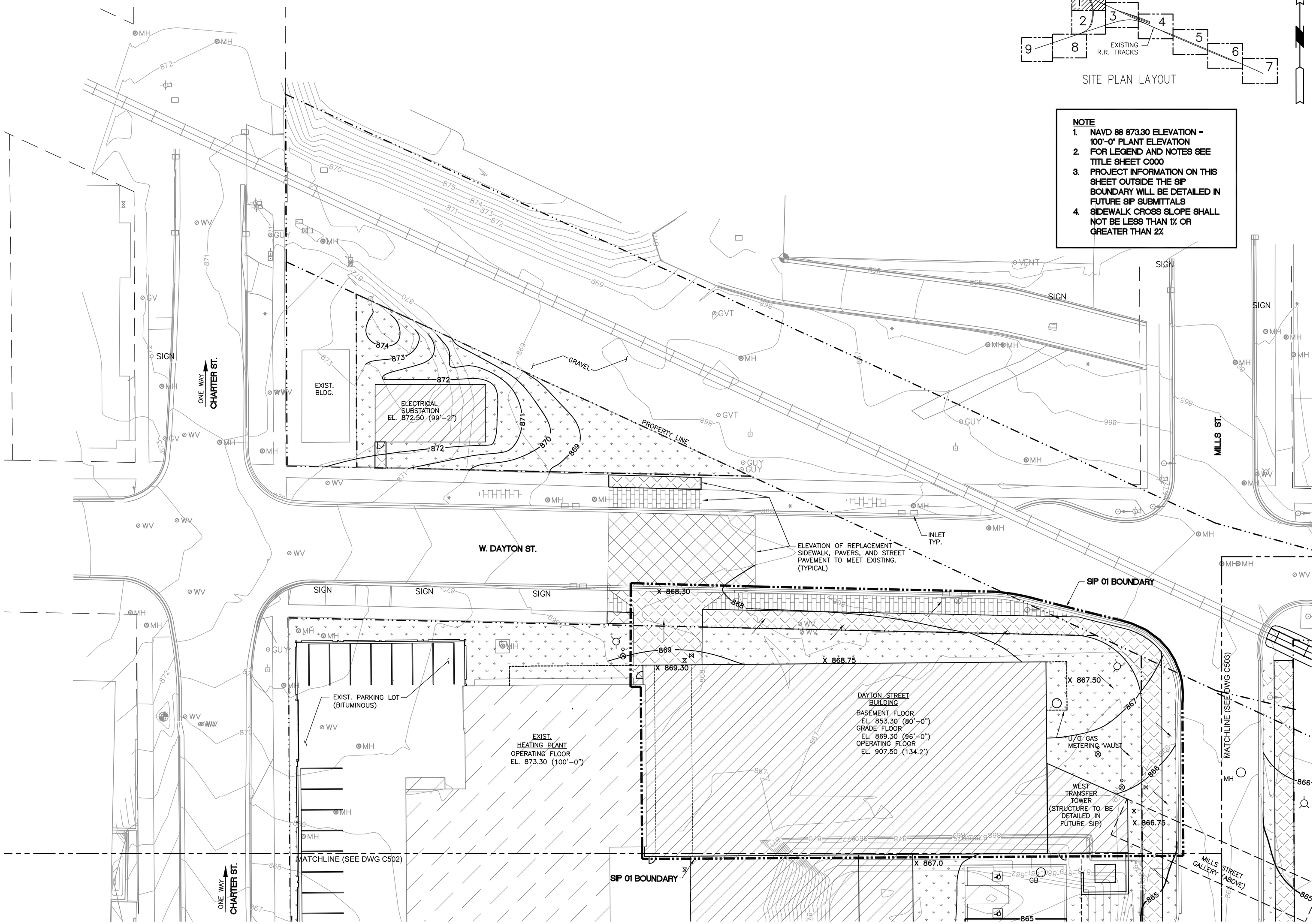

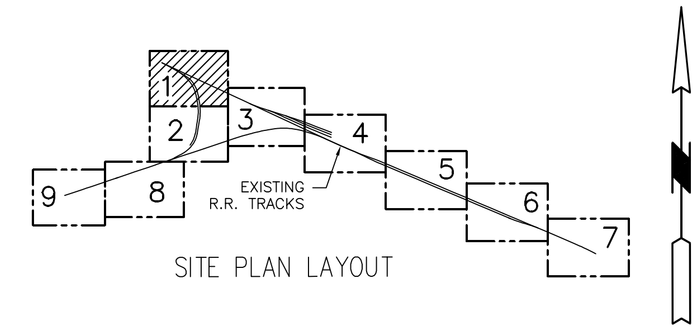

SITE PLAN LAYOUT

NOTE

1. NAVD 88 873.30 ELEVATION = 100'-0" PLANT ELEVATION
2. FOR LEGEND AND NOTES SEE TITLE SHEET C000
3. PROJECT INFORMATION ON THIS SHEET OUTSIDE THE SIP BOUNDARY WILL BE DETAILED IN FUTURE SIP SUBMITTALS
4. SIDEWALK CROSS SLOPE SHALL NOT BE LESS THAN 1% OR GREATER THAN 2%

PEC
POWER ENGINEERS COLLABORATIVE LLC
150 Sunny Slope Road
Suite 110
Brookfield, Wisconsin 53005
WWW.PECLLC.COM

PÖYRY
middlough
Potter Lawson

State of Wisconsin
Department of Administration
Division of State Facilities

Agency / Institution:
UNIVERSITY OF WISCONSIN, MADISON

Project Title:
CHARTER STREET REBUILD

Project Location:
MADISON, WI.

Sheet Title:
GRADING AND DRAINAGE PLAN

Revisions:

No.	Date:	By:	Description:
1	03-10-10	MCI	GDP SUBMITTAL
2	03-12-10	MCI	EPC CONCEPT
3	03-19-10	MCI	EPC CONCEPT
4	04-15-10	MCI	EPC CONCEPT
5	05-24-10	MCI	SIP 01 SUBMITTAL

Graphic Scale	10 0 20
DSF Number	09A2L
Set Type	PR
Date Issued	03-10-10
Sheet Number	C501

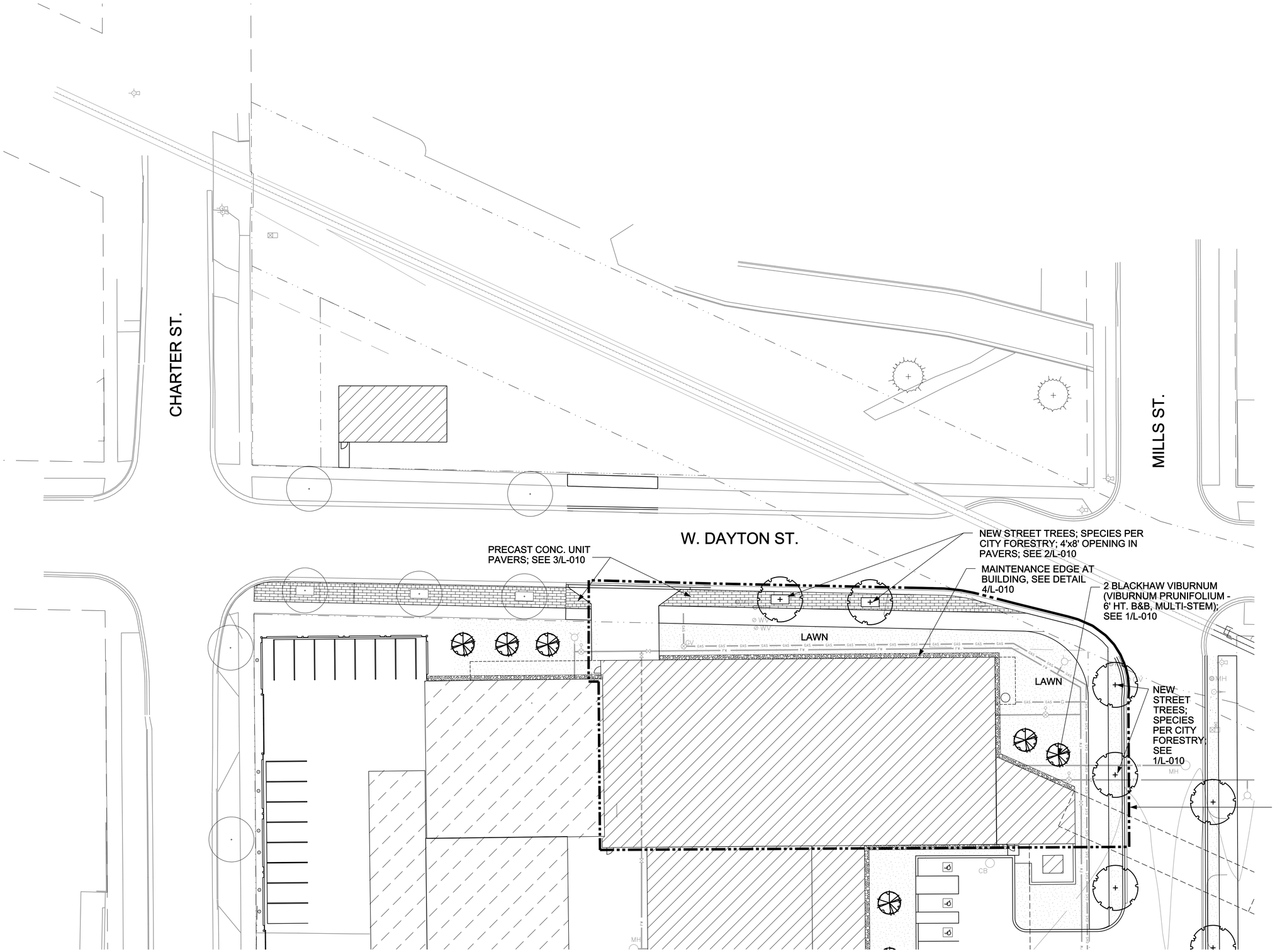

NOTE:
PROJECT NFORMATION SHOWN ON THIS SHEET OUTSIDE OF THE SIP BOUNDARY WILL BE DETAILED IN FUTURE SIP SUBMITTALS

PEC
POWER ENGINEERS COLLABORATIVE LLC
150 Sunny Slope Road
Suite 110
Brookfield, Wisconsin 53005
WWW.PECLLC.COM

PÖYRY

middough

Potter Lawson

State of Wisconsin
Department of Administration
Division of State Facilities

Agency / institution:
UNIVERSITY OF WISCONSIN, MADISON

Project Title:
CHARTER STREET REBUILD

Project Location:
MADISON, WI.

Sheet Title:
LANDSCAPE PLAN

Revisions:

No.	Date:	By:	Description:

Graphic Scale	
DSF Number	09A2L
Set Type	SIP 1
Date Issued	05-24-10
Sheet Number	L-001

KEN SAIKI DESIGN INC
LANDSCAPE ARCHITECTS
303 S. PATERSON
SUITE 2N
MADISON, WI 53703
Phone: 608 251-3600
Fax: 608 251-3330
www.ksd-la.com

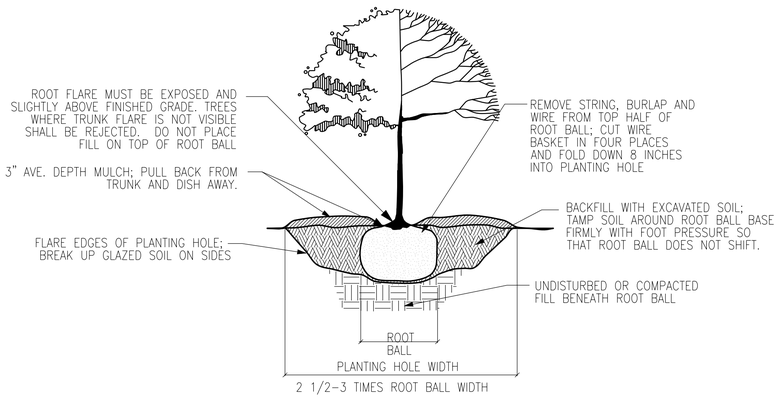

1 / L-010 TREE PLANTING IN LAWN
NTS

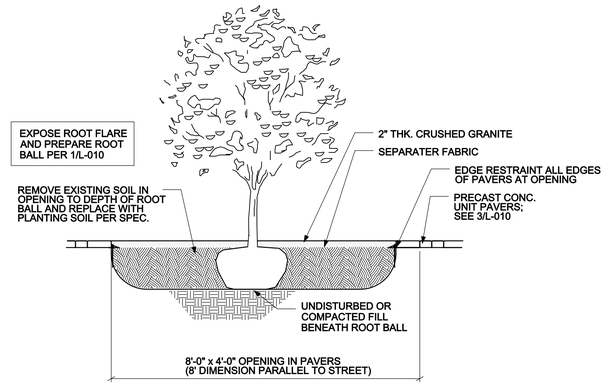

2 / L-010 TREE PLANTING IN UNIT PAVER TERRACE
NTS

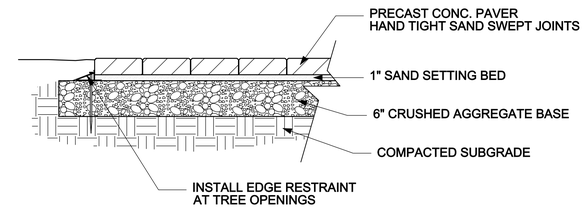

3 / L-010 PRECAST CONC. UNIT PAVERS IN TERRACE
1"=1'-0"

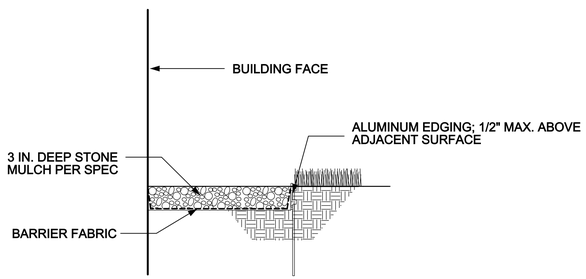

4 / L-010 STONE MAINTENANCE EDGE
1"=1'-0"

PEC
POWER ENGINEERS COLLABORATIVE LLC
150 Sunny Slope Road
Suite 110
Brookfield, Wisconsin 53005
WWW.PECLLC.COM

PÖYRY

middough

Potter Lawson

State of Wisconsin
Department of Administration
Division of State Facilities

Agency / institution:
UNIVERSITY OF WISCONSIN, MADISON

Project Title:
CHARTER STREET REBUILD

Project Location:
MADISON, WI.

Sheet Title:
LANDSCAPE DETAILS

Revisions:

No.	Date:	By:	Description:

Graphic Scale	
DSF Number	09A2L
Set Type	SIP 1
Date Issued	05-24-10
Sheet Number	L-010

KEN SAIKI DESIGN INC
LANDSCAPE ARCHITECTS
353 S. PATERSON
SUITE ONE
MADISON, WI 53703
Phone: 608 251-3600
Fax: 608 251-2330
www.ksd-la.com

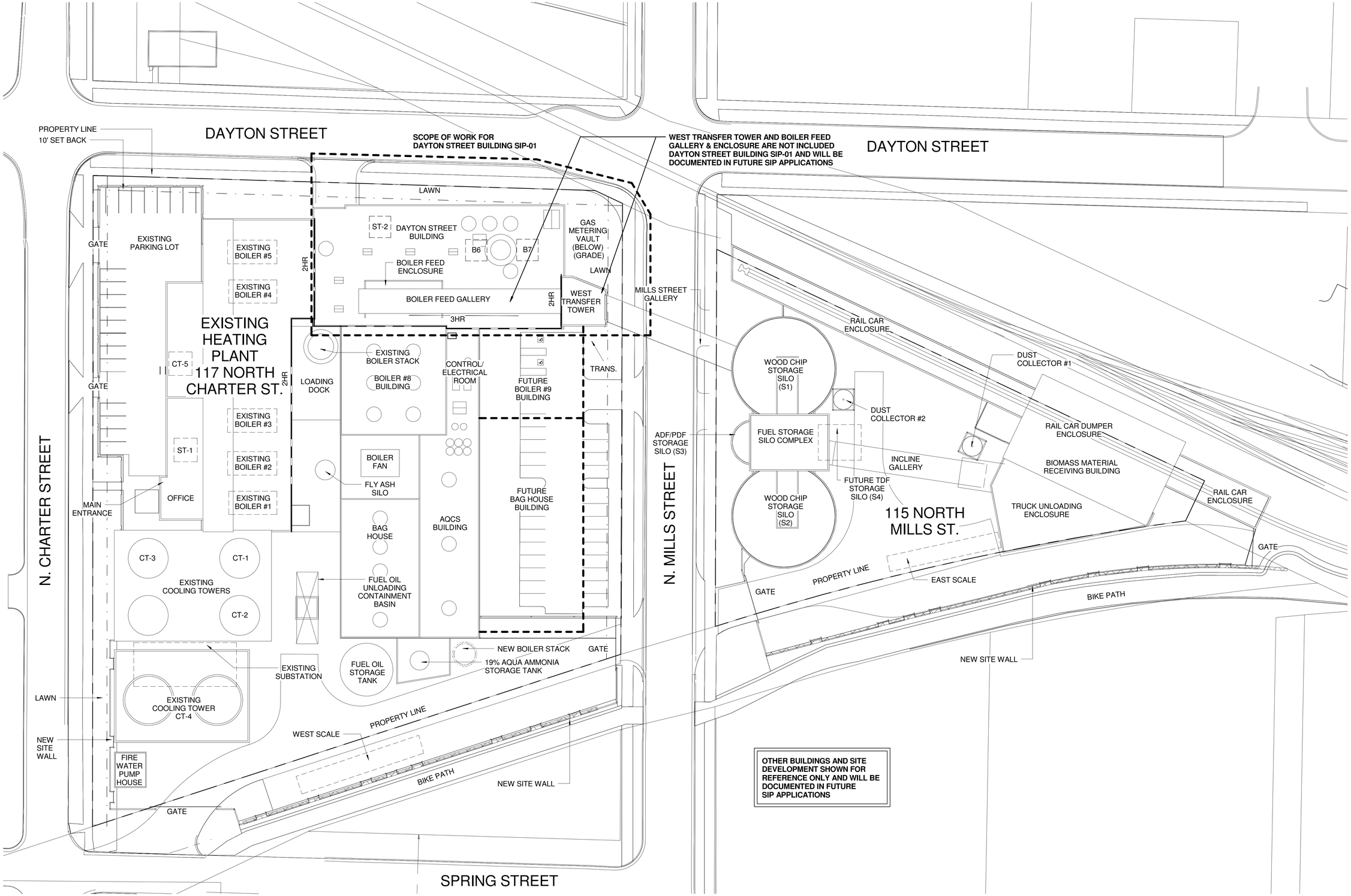

1 A100 OVERALL SITE REFERENCE PLAN
1" = 30'-0"

NORTH

5/24/2010 2:36:13 PM

PEC
POWER ENGINEERS COLLABORATIVE LLC
150 Sunny Slope Road
Suite 110
Brookfield, Wisconsin 53005
WWW.PECLLC.COM

PÖYRY
middough
Potter Lawson

PLI Project No: 2009.07.00

State of Wisconsin
Department of Administration
Division of State Facilities

Agency / Institution: UNIVERSITY OF WISCONSIN SYSTEM

Project Title: CHARTER STREET REBUILD

Project Location: MADISON, WI

Sheet Title: SITE REFERENCE PLAN

Revisions:

No.	Date:	By:	Description:

Graphic Scale	
DSF Number	09A2L
Set Type	PR
Date Issued	05-24-10
Sheet Number	A100

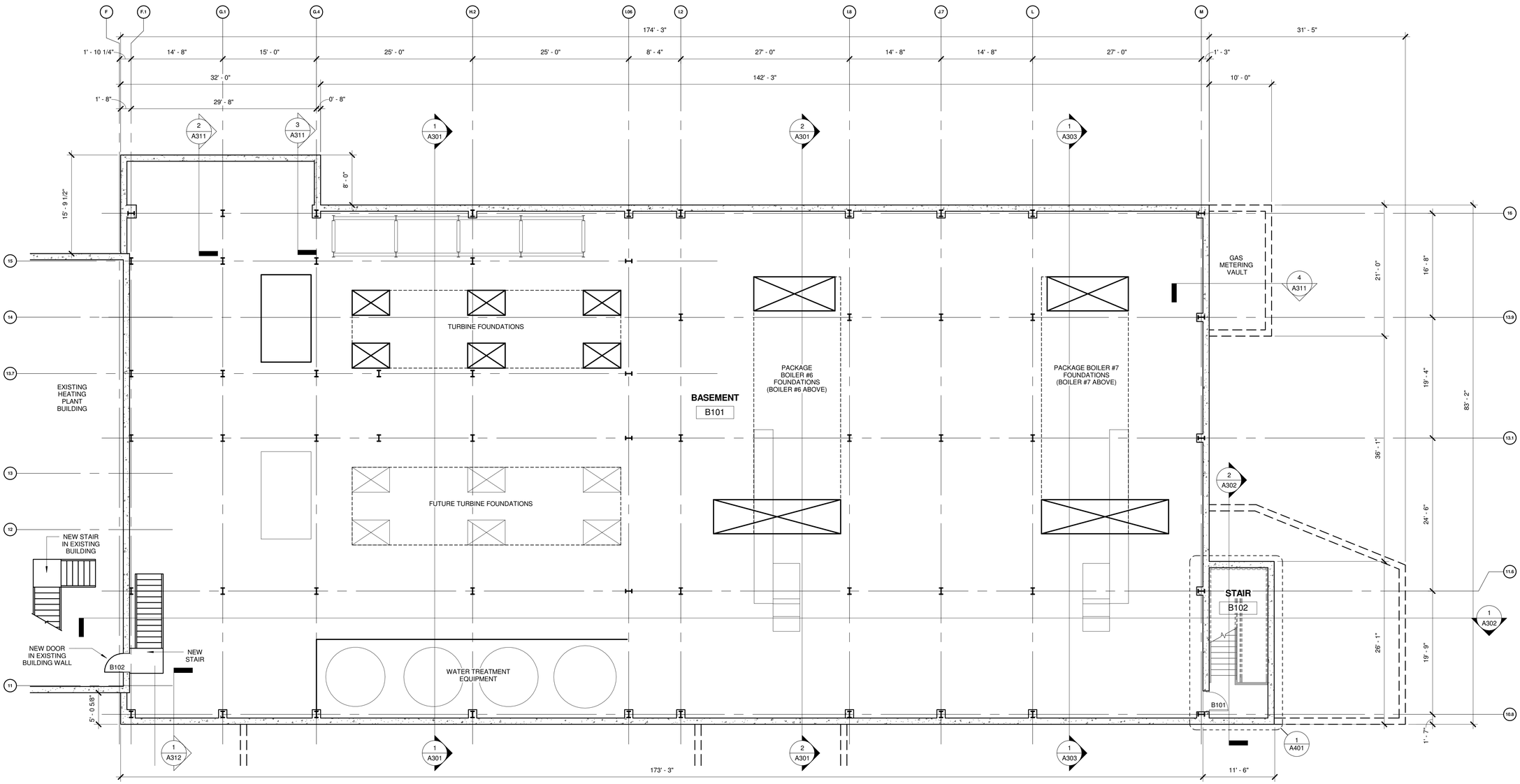

1 A101 BASEMENT FLOOR PLAN

1/8" = 1'-0"

NORTH

5/24/2010 2:37:00 PM

PEC

POWER ENGINEERS COLLABORATIVE LLC

150 Sunny Slope Road
Suite 110
Brookfield, Wisconsin 53005
WWW.PECLLC.COM

PÖYRY

middough

Potter Lawson

PLI Project No:
2009.07.00

State of Wisconsin
Department of Administration
Division of State Facilities

Agency / Institution:
UNIVERSITY OF WISCONSIN SYSTEM

Project Title:
CHARTER STREET REBUILD

Project Location:
MADISON, WI

Sheet Title:
BASEMENT FLOOR PLAN

Revisions:

No.	Date:	By:	Description:

Graphic Scale	
DSF Number	09A2L
Set Type	PR
Date Issued	05-24-10
Sheet Number	A101

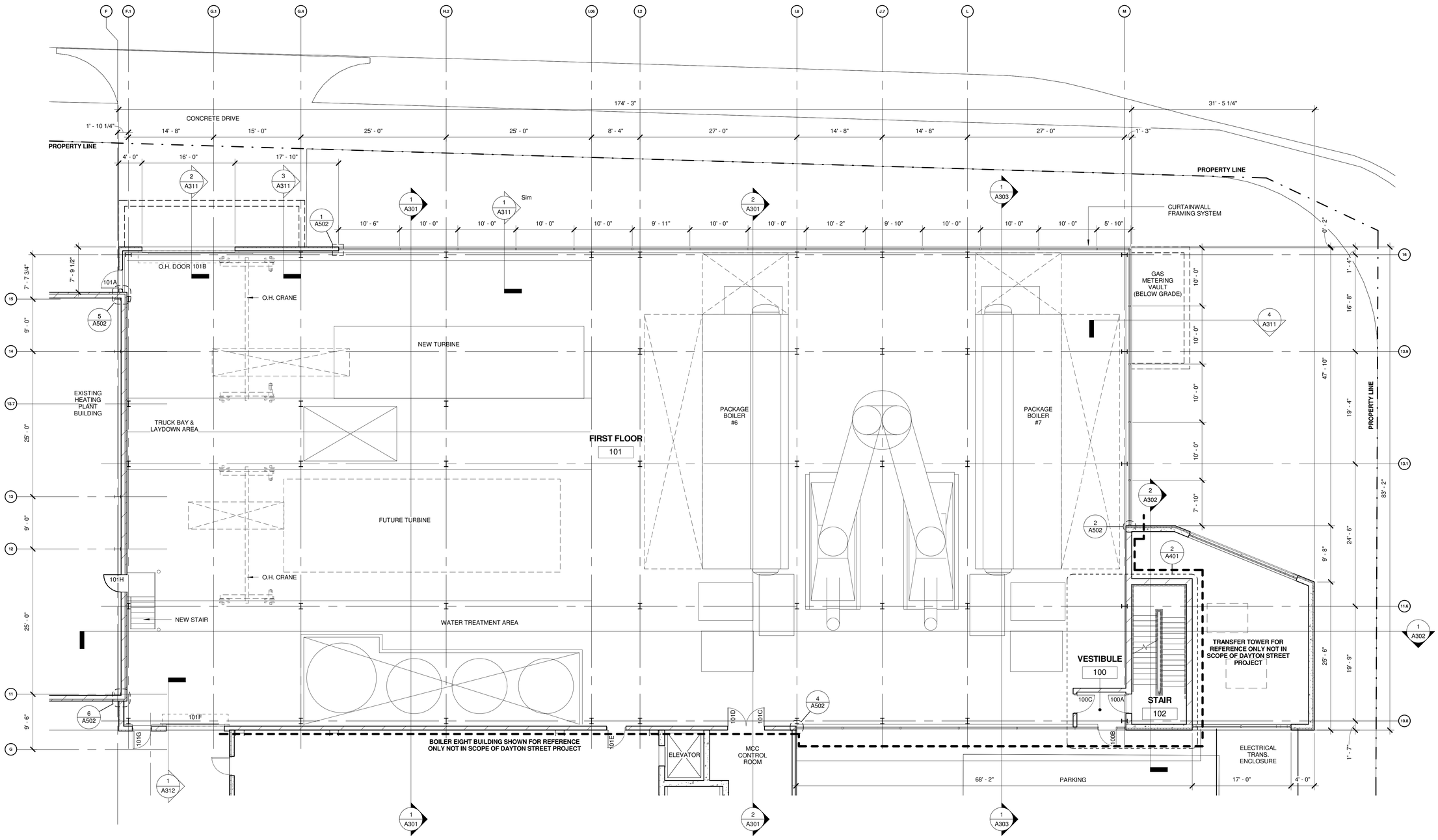

2 A102 FIRST FLOOR PLAN
1/8" = 1'-0"

NORTH

5/24/2010 2:37:21 PM

PEC
POWER ENGINEERS COLLABORATIVE LLC
150 Sunny Slope Road
Suite 110
Brookfield, Wisconsin 53005
WWW.PECLLC.COM

PÖYRY
PÖYRY (APPLETON) LLC APPLETON, WISCONSIN

middough

Potter Lawson

PLI Project No:
2009.07.00

State of Wisconsin
Department of Administration
Division of State Facilities

Agency / Institution:
UNIVERSITY OF WISCONSIN SYSTEM

Project Title:
CHARTER STREET REBUILD

Project Location:
MADISON, WI

Sheet Title:
FIRST FLOOR PLAN

Revisions:

No.	Date:	By:	Description:

Graphic Scale	
DSF Number	09A2L
Set Type	PR
Date Issued	05-24-10
Sheet Number	A102

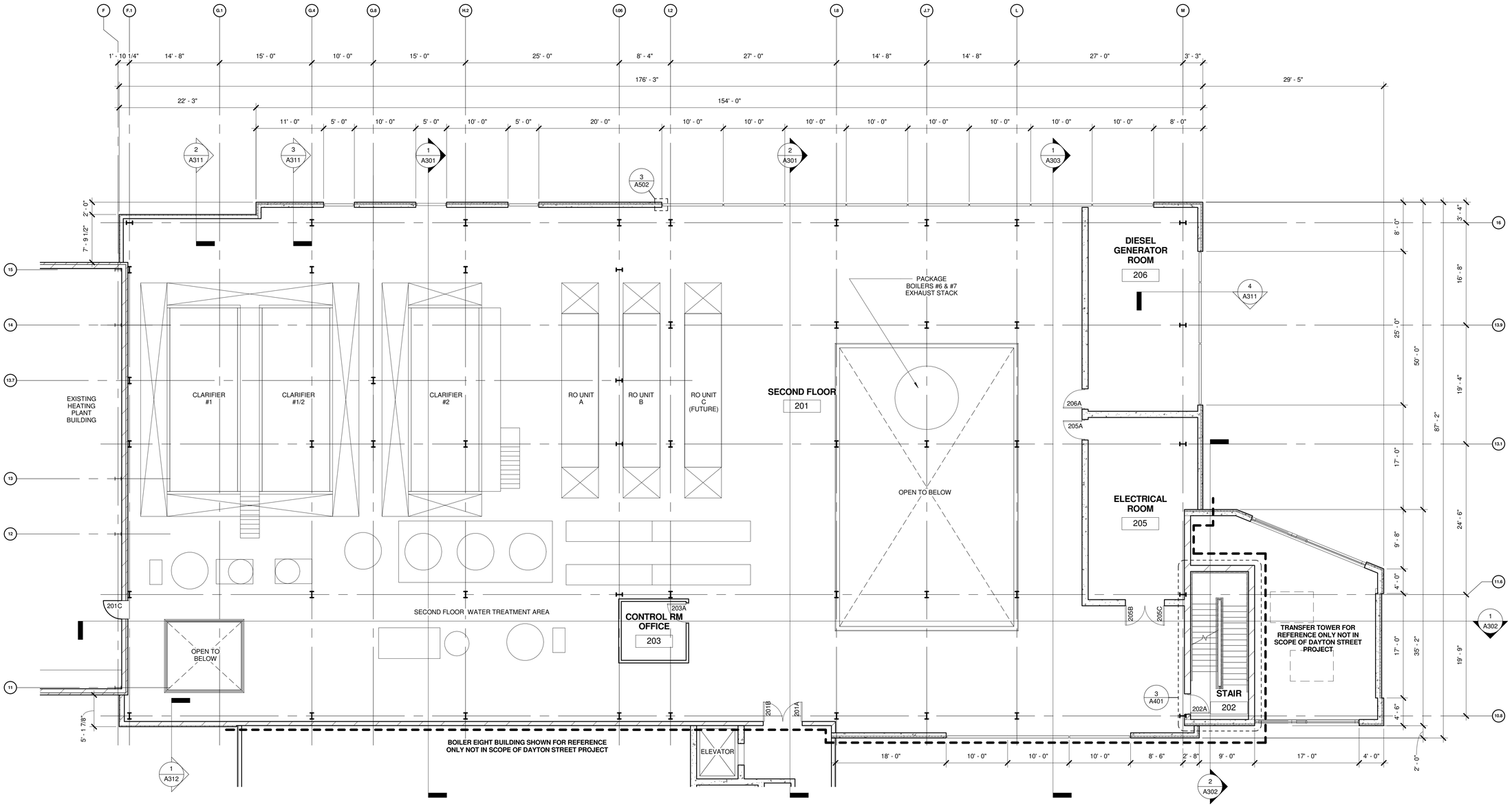

1 / A103 SECOND FLOOR PLAN

1/8" = 1'-0"

NORTH

5/24/2010 2:37:32 PM

PEC
POWER ENGINEERS COLLABORATIVE LLC
150 Sunny Slope Road
Suite 110
Brookfield, Wisconsin 53005
WWW.PECLLC.COM

PÖYRY
PÖYRY (APPLETON) LLC APPLETON, WISCONSIN

middough

Potter Lawson

PLI Project No: 2009.07.00

State of Wisconsin
Department of Administration
Division of State Facilities

Agency / Institution: UNIVERSITY OF WISCONSIN SYSTEM

Project Title: CHARTER STREET REBUILD

Project Location: MADISON, WI

Sheet Title: SECOND FLOOR PLAN

Revisions:

No.	Date:	By:	Description:

Graphic Scale	
DSF Number	09A2L
Set Type	PR
Date Issued	05-24-10
Sheet Number	A103

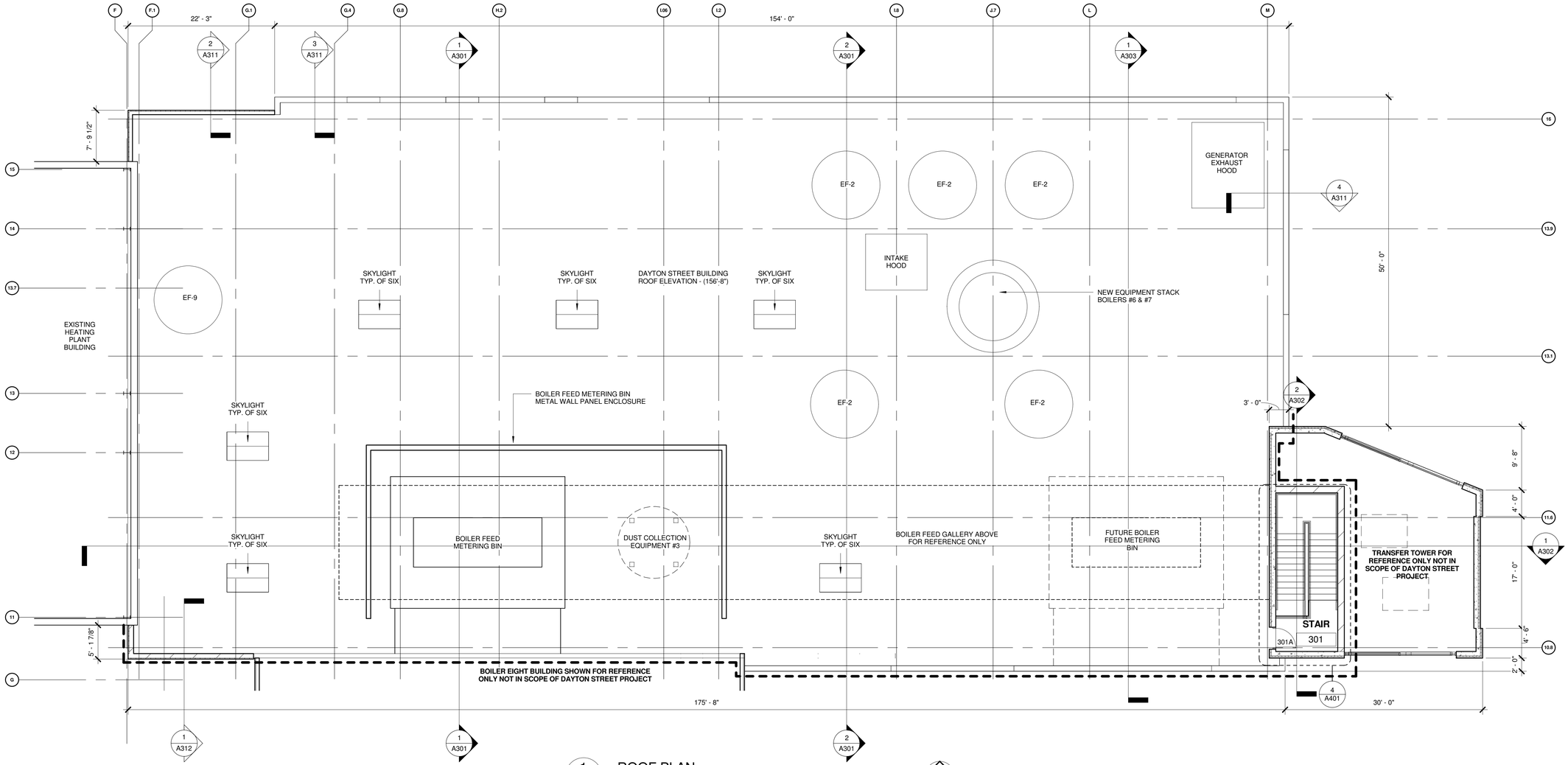

1 A104 ROOF PLAN
1/8" = 1'-0"

NORTH

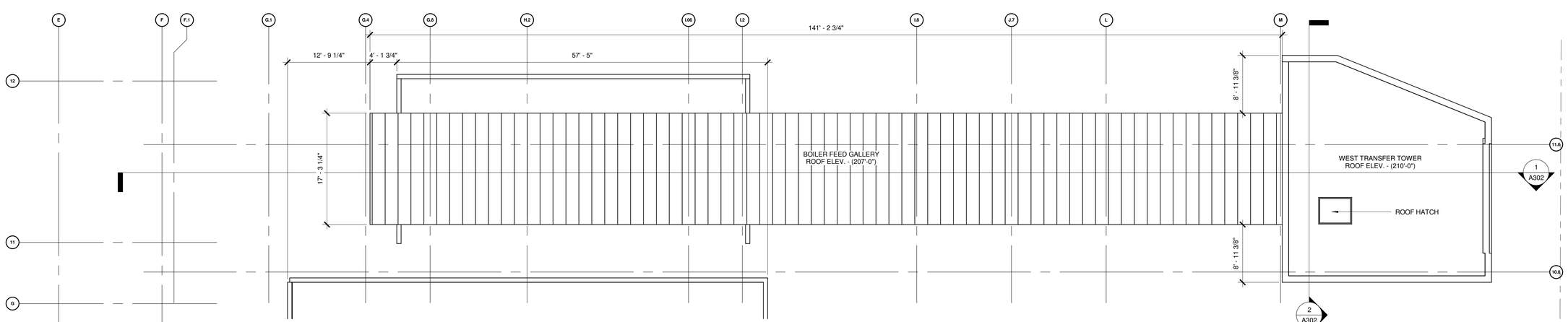

2 A104 WEST TRANSFER TOWER ROOF AND BOILER FEED GALLERY ROOF PLAN
1/8" = 1'-0"

NORTH

DRAWING SHOWN FOR REFERENCE ONLY NOT INCLUDED IN DAYTON STREET BUILDING SIP-01

5/24/2010 2:44:31 PM

PEC
POWER ENGINEERS COLLABORATIVE LLC
150 Sunny Slope Road
Suite 110
Brookfield, Wisconsin 53005
WWW.PECLLC.COM

PÖYRY
middough
Potter Lawson

PLI Project No: 2009.07.00

State of Wisconsin
Department of Administration
Division of State Facilities

Agency / Institution: UNIVERSITY OF WISCONSIN SYSTEM

Project Title: **CHARTER STREET REBUILD**

Project Location: MADISON, WI

Sheet Title: ROOF PLANS

Revisions:

No.	Date:	By:	Description:

Graphic Scale	
DSF Number	09A2L
Set Type	PR
Date Issued	05-24-10
Sheet Number	**A104**

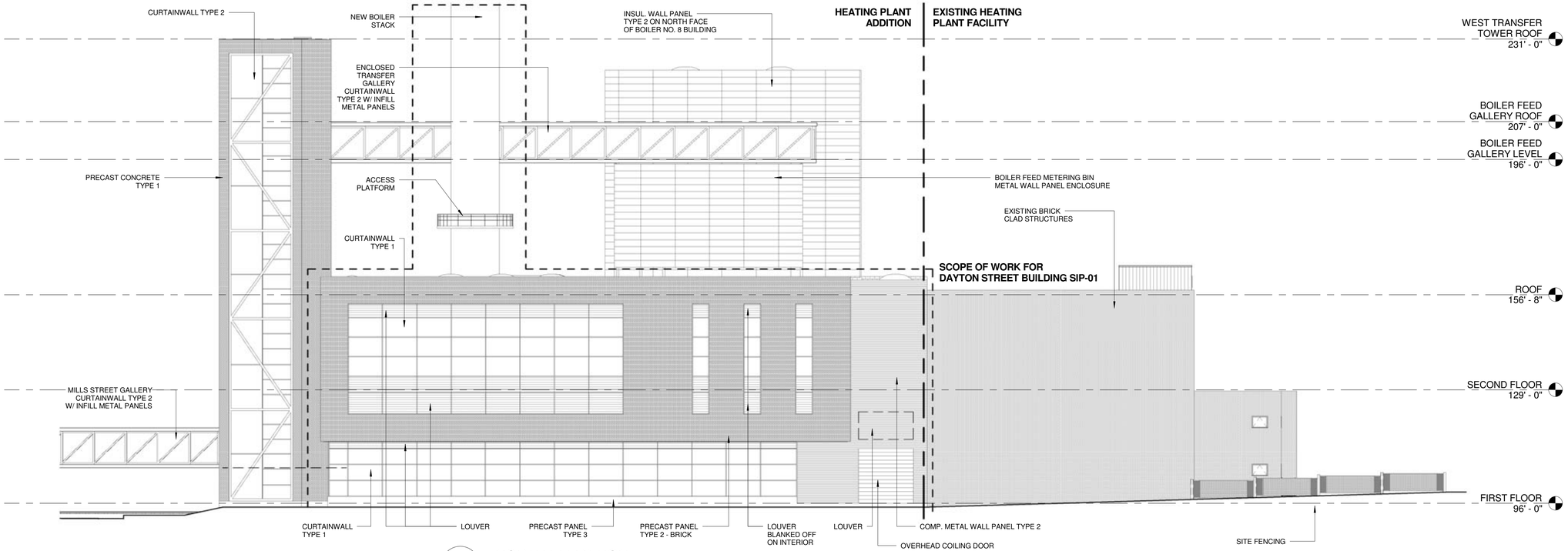

1 / A201 NORTH ELEVATION
1/16" = 1'-0"

MATERIAL LEGEND

PRECAST CONCRETE TYPES

TYPE 1 - INSULATED WALL PANEL WITH 2" RIGID INSULATION AND 2" EXTERIOR ARCHITECTURAL WYTH FACED WITH BRICK TYPE 1

TYPE 2 - INSULATED WALL PANEL WITH 2" RIGID INSULATION AND 2" EXTERIOR ARCHITECTURAL WYTH FACED WITH BRICK TYPE 2

TYPE 3 - INSULATED WALL PANEL WITH 2" RIGID INSULATION AND 2" EXTERIOR ARCHITECTURAL CONCRETE WYTH 2'X10' REVEAL PATTERN

COMPOSITE METAL WALL PANEL TYPES

TYPE 1 - HORIZONTAL - B.O.D. CENTRIA EXPOSED FASTENER PROFILE SERIES SUPER RIB - "GRAY VELVET" FINISH OVER INSULATED METAL WALL PANEL TYPE 3 OR EQUAL

TYPE 2 - HORIZONTAL - B.O.D. CENTRIA EXPOSED FASTENER PROFILE SERIES BR5-36 "GRAY VELVET" FINISH OVER COMPOSITE WALL PANEL TYPE 3 OR EQUAL

INSULATED METAL WALL PANEL TYPES

TYPE 1 - 2'X10' HORIZONTAL - B.O.D. CENTRIA FORMAWALL DIMENSION SERIES 2" THICK NOMINAL FLAT - XL SILVER COLOR

TYPE 2 - 2'X10' HORIZONTAL - B.O.D. CENTRIA FORMAWALL DIMENSION SERIES 2" THICK NOMINAL FLAT - COLONEL RED COLOR

TYPE 3 - B.O.D. CENTRIA VERSAWALL 2" THICK NOMINAL FLAT PANEL OR EQUAL

STOREFRONT - ALUMINUM FRAMING TYPES

TYPE 1 - TYPICAL GLAZING CONDITION - SEE OTS 022 FOR DETAILS

TYPE 2 - SSG GLAZING OPTION AT RIBBON WINDOWS - SEE OTS-022 FOR DETAILS

CURTAINWALL - ALUMINUM FRAMING TYPES

TYPE 1 - TYPICAL CONDITION - SEE OTS 022 FOR DETAILS

TYPE 2 - GALLERY ENCLOSURES - SEE OTS 022 FOR DETAILS

TYPE 3 - RAIL HOPPER END WALLS - SEE OTS 022 FOR DETAILS

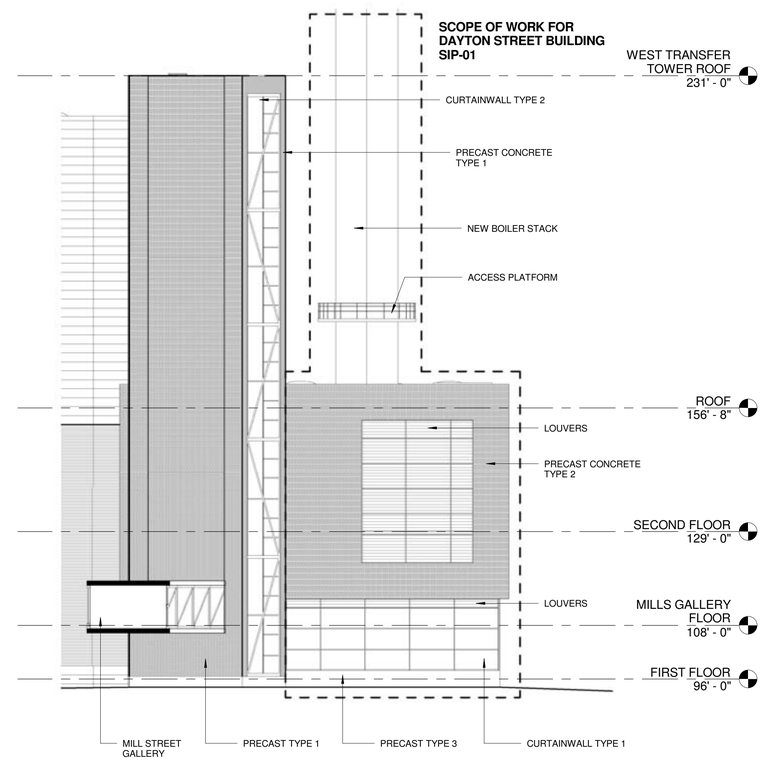

2 / A201 EAST ELEVATION
1/16" = 1'-0"

5/24/2010 2:58:07 PM

PEC
POWER ENGINEERS COLLABORATIVE LLC
150 Sunny Slope Road
Suite 110
Brookfield, Wisconsin 53005
WWW.PECLLC.COM
PÖYRY
middough
Potter Lawson

PLI Project No: 2009.07.00

State of Wisconsin
Department of Administration
Division of State Facilities

Agency / Institution: UNIVERSITY OF WISCONSIN SYSTEM

Project Title: CHARTER STREET REBUILD

Project Location: MADISON, WI

Sheet Title: BUILDING ELEVATIONS

Revisions:

No.	Date:	By:	Description:

Graphic Scale	
DSF Number	09A2L
Set Type	PR
Date Issued	05-24-10
Sheet Number	A201

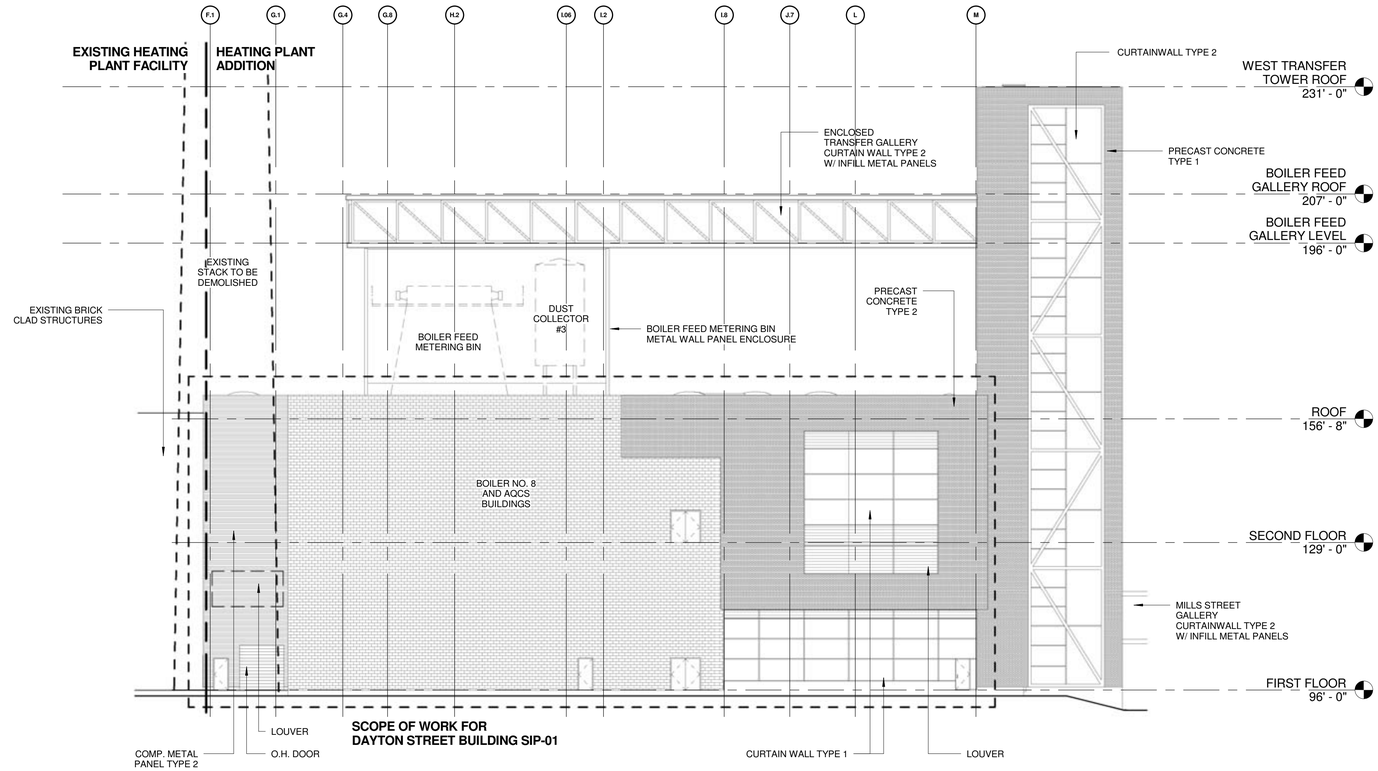

1 A202 SOUTH ELEVATION
1/16" = 1'-0"

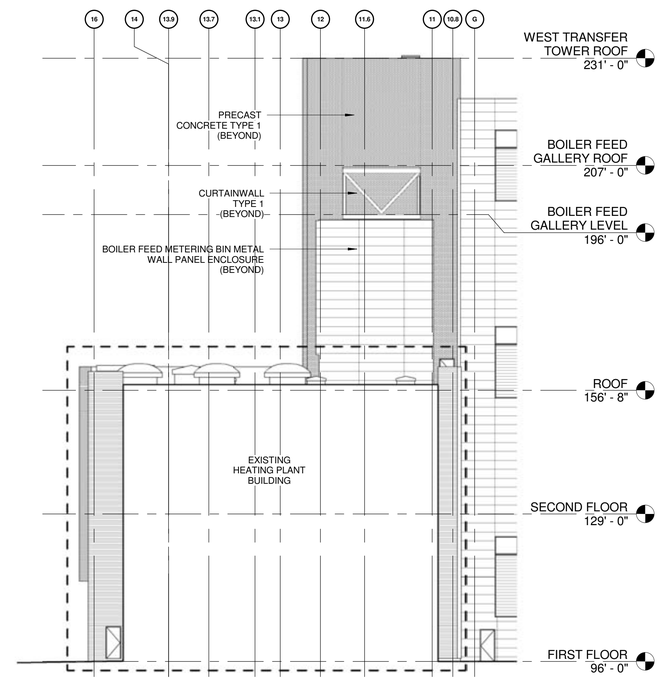

2 A202 WEST ELEVATION
1/16" = 1'-0"

5/24/2010 2:58:51 PM

PEC
POWER ENGINEERS COLLABORATIVE LLC
150 Sunny Slope Road
Suite 110
Brookfield, Wisconsin 53005
WWW.PECLLC.COM

PÖYRY
PÖYRY (APPLETON) LLC APPLETON, WISCONSIN

middough

Potter Lawson

PLI Project No:
2009.07.00

State of Wisconsin
Department of Administration
Division of State Facilities

Agency / Institution:
UNIVERSITY OF WISCONSIN SYSTEM

Project Title:
CHARTER STREET REBUILD

Project Location:
MADISON, WI

Sheet Title:
BUILDING ELEVATIONS

Revisions:

No.	Date:	By:	Description:

Graphic Scale	
DSF Number	09A2L
Set Type	PR
Date Issued	05-24-10
Sheet Number	A202

Mills Street looking South

Dayton Street looking Southeast

Mills Street looking South at night

Dayton & Mills Street Intersection looking Southeast

Dayton Street looking West

EXTERIOR IMAGES INCLUDED IN THE UDC - GDP SUBMISSION 5.12.10

5/24/2010 3:01:15 PM

PEC

POWER ENGINEERS COLLABORATIVE LLC

150 Sunny Slope Road
Suite 110
Brookfield, Wisconsin 53005
WWW.PECLLC.COM

PÖYRY

middough

Potter Lawson

PLI Project No: 2009.07.00

State of Wisconsin
Department of Administration
Division of State Facilities

Agency / Institution: UNIVERSITY OF WISCONSIN SYSTEM

Project Title: **CHARTER STREET REBUILD**

Project Location: MADISON, WI

Sheet Title: EXTERIOR RENDERINGS

Revisions:

No.	Date:	By:	Description:

Graphic Scale	
DSF Number	09A2L
Set Type	PR
Date Issued	05-24-10
Sheet Number	**A213**

Mills Street looking Northwest

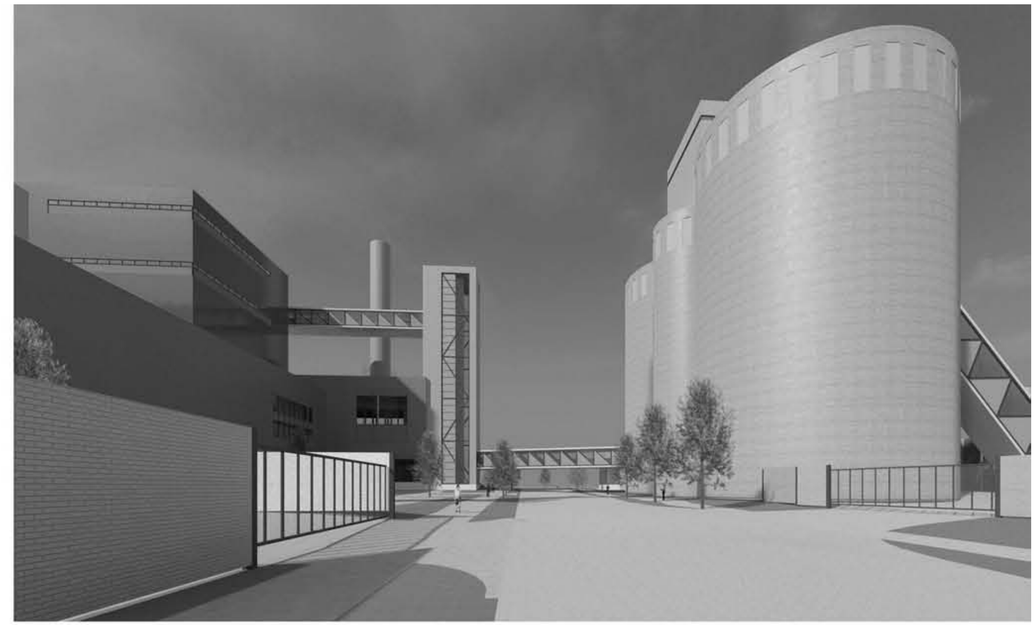

Mills Street looking North

Bike Path looking West

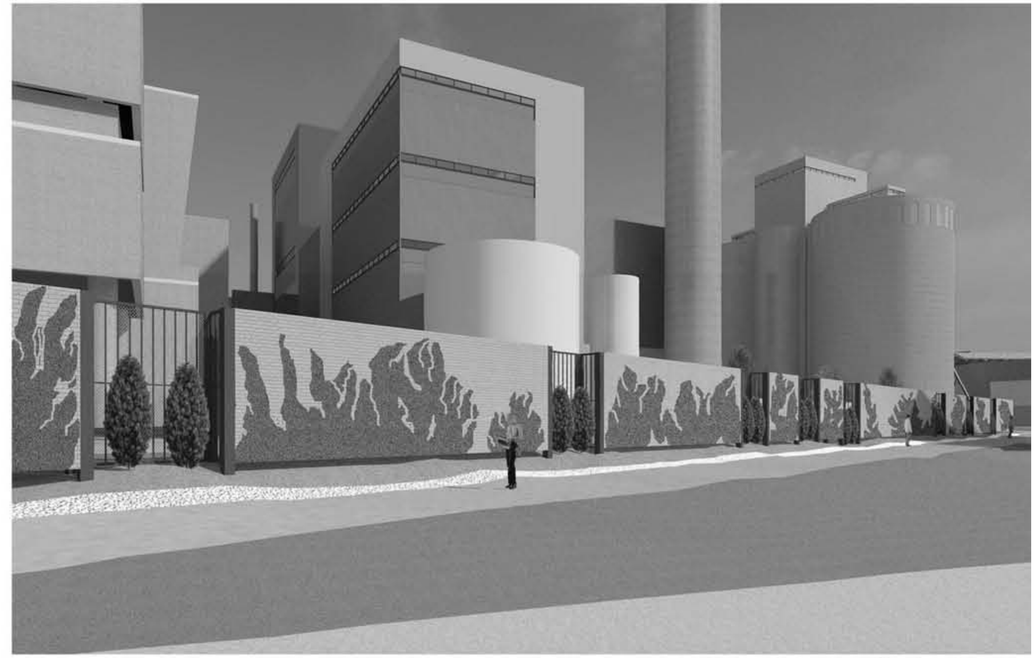

Bike Path from Spring Street

EXTERIOR IMAGES INCLUDED IN THE UDC - GDP SUBMISSION 5.12.10

PEC

POWER ENGINEERS COLLABORATIVE LLC

150 Sunny Slope Road
Suite 110
Brookfield, Wisconsin 53005
WWW.PECLLC.COM

PÖYRY

middough

Potter Lawson

PLI Project No:
2009.07.00

State of Wisconsin
Department of Administration
Division of State Facilities

Agency / Institution:
UNIVERSITY OF WISCONSIN SYSTEM

Project Title:
CHARTER STREET REBUILD

Project Location:
MADISON, WI

Sheet Title:
EXTERIOR RENDERINGS

Revisions:

No.	Date:	By:	Description:

Graphic Scale	
DSF Number	09A2L
Set Type	PR
Date Issued	05-24-10
Sheet Number	**A214**

5/24/2010 3:01:04 PM

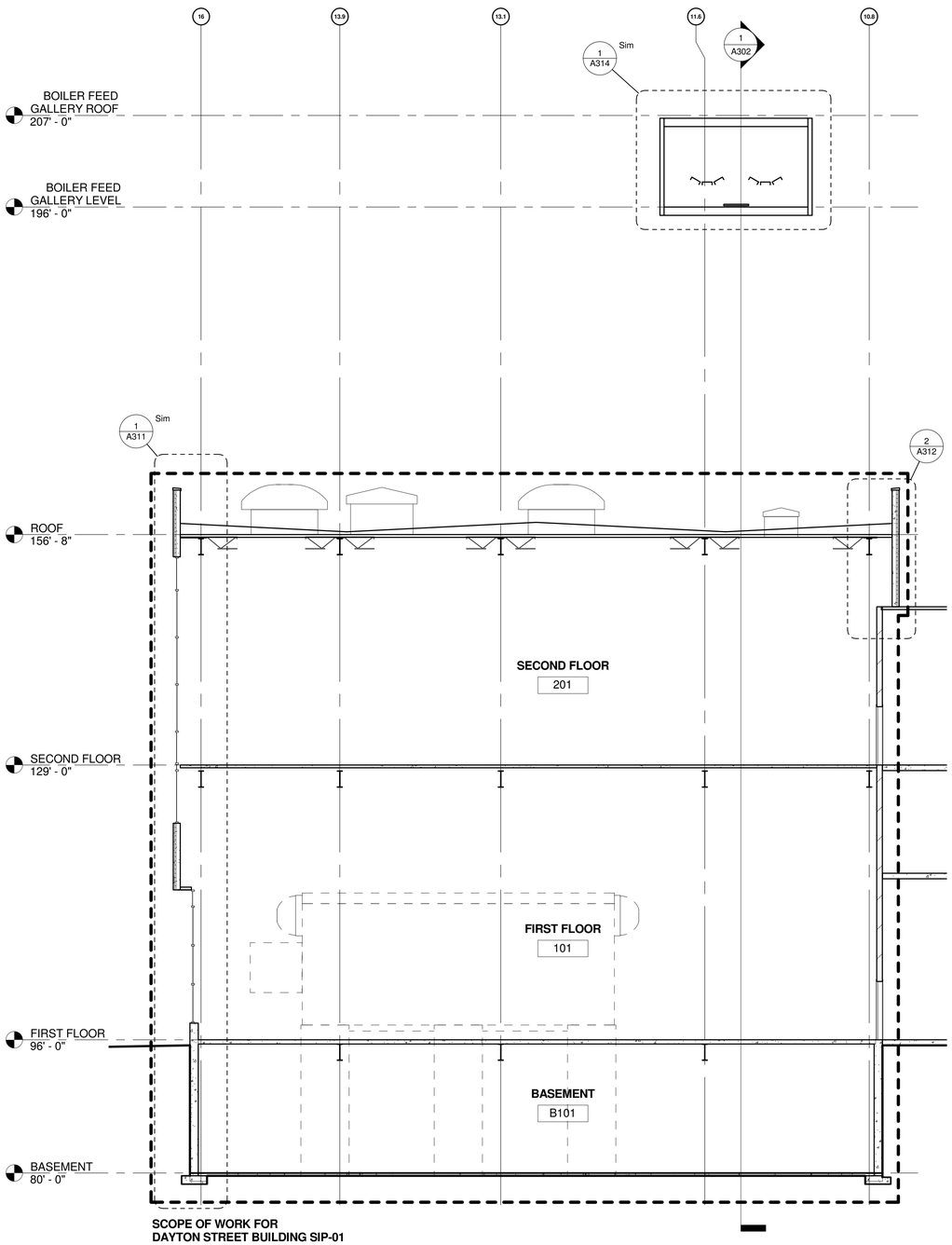

2 A301 BUILDING SECTION
1/8" = 1'-0"

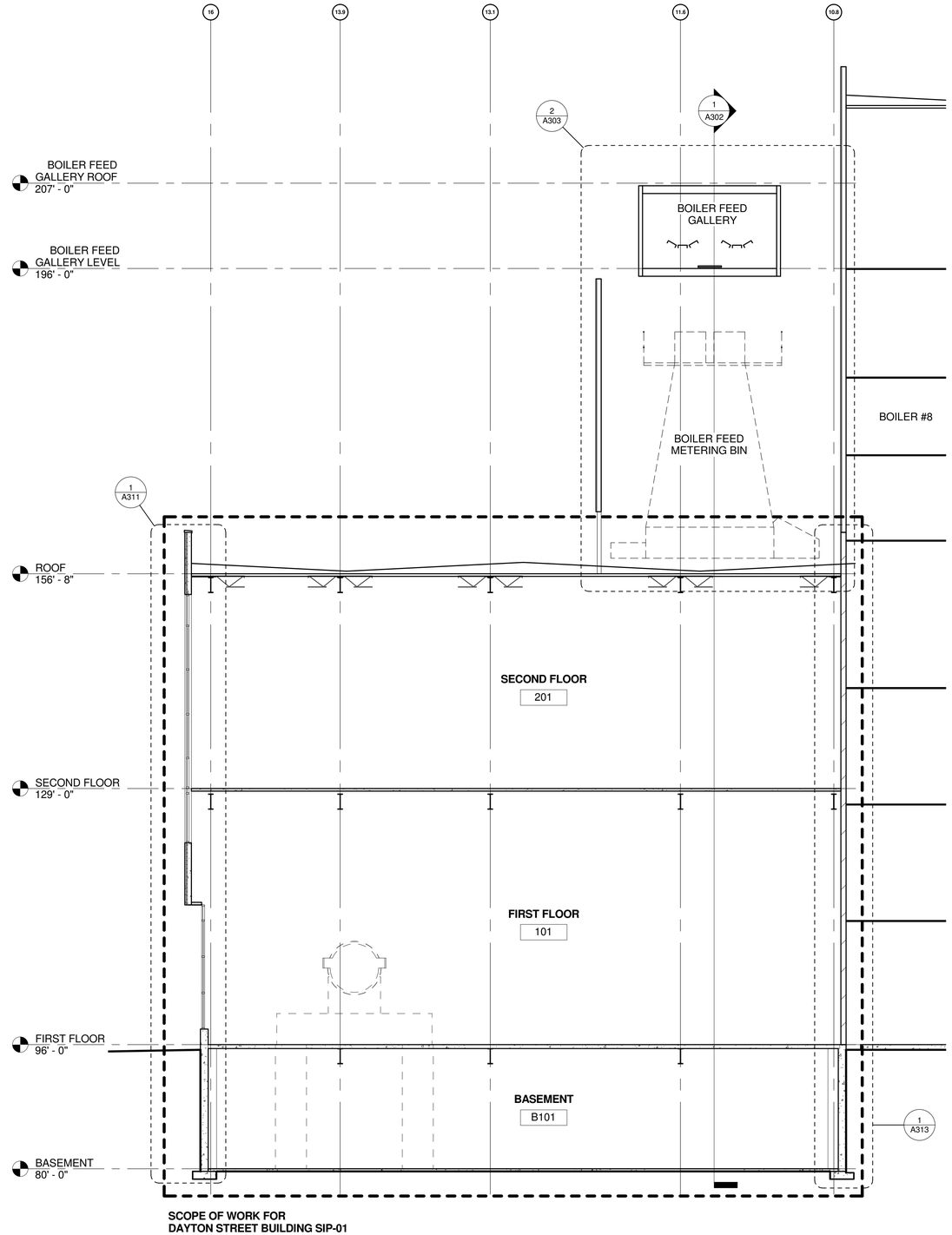

1 A301 BUILDING SECTION
1/8" = 1'-0"

5/24/2010 2:56:03 PM

PEC
POWER ENGINEERS
COLLABORATIVE LLC
150 Sunny Slope Road
Suite 110
Brookfield, Wisconsin 53005
WWW.PECLLC.COM

PÖYRY
middough
Potter Lawson

PLI Project No:
2009.07.00

State of Wisconsin
Department of Administration
Division of State Facilities

Agency / Institution:
UNIVERSITY OF WISCONSIN SYSTEM

Project Title:
CHARTER STREET REBUILD

Project Location:
MADISON, WI

Sheet Title:
BUILDING SECTIONS

Revisions:

No.	Date:	By:	Description:

Graphic Scale	
DSF Number	09A2L
Set Type	PR
Date Issued	05-24-10
Sheet Number	A301

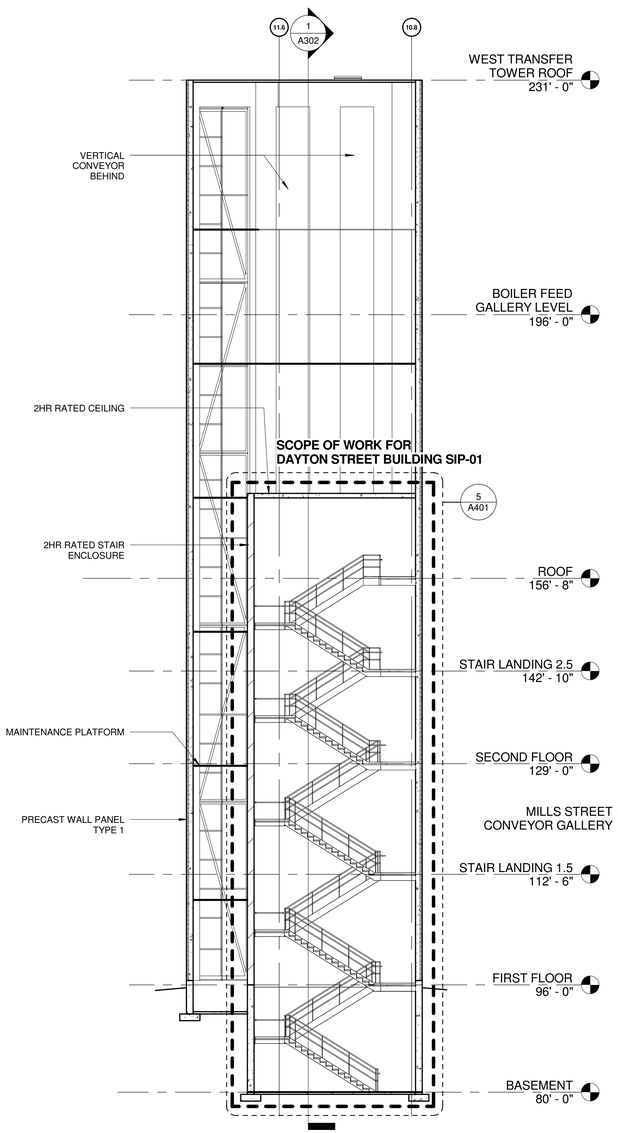

2 A302 WEST TRANSFER TOWER SECTION
3/32" = 1'-0"

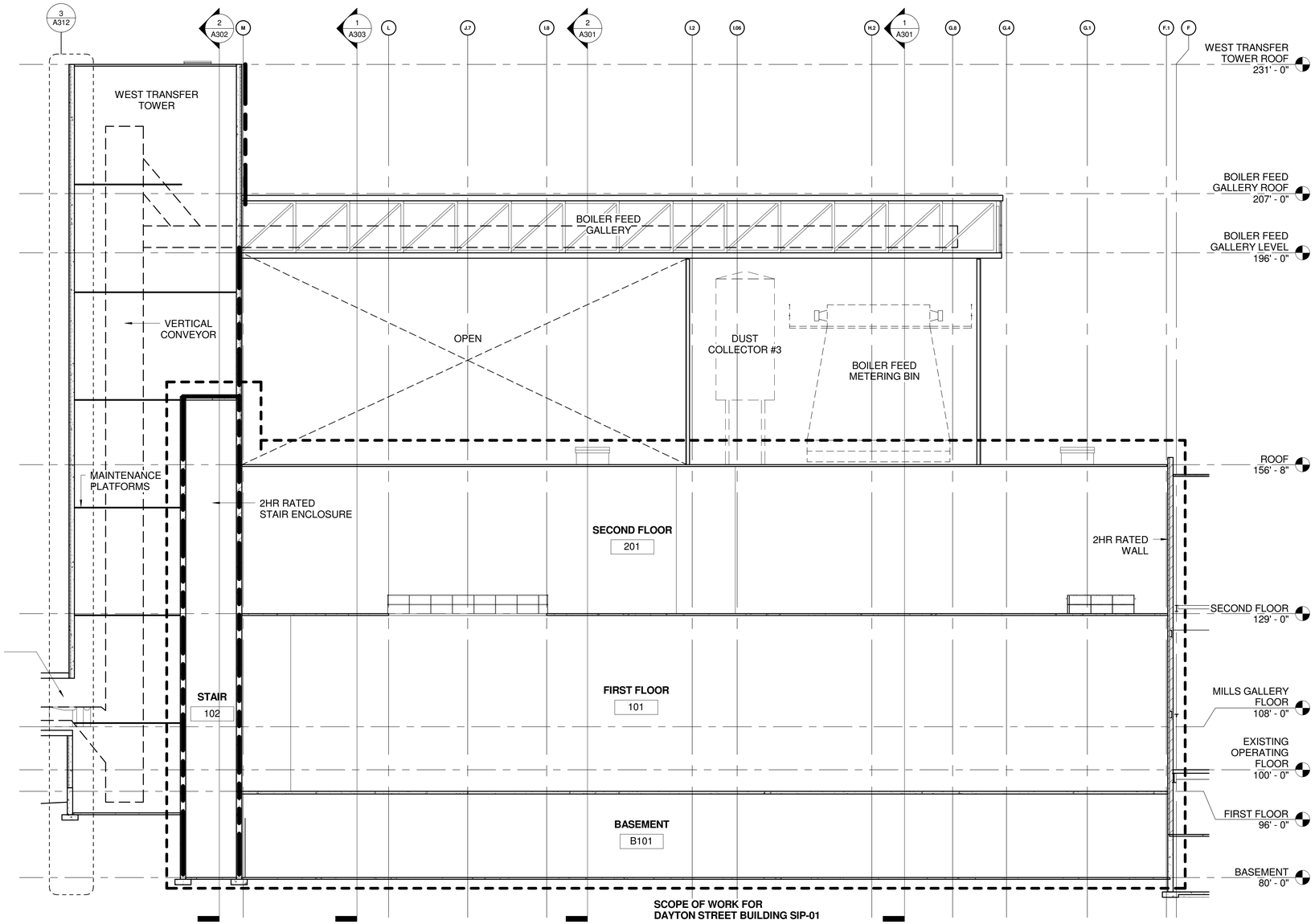

1 A302 BUILDING SECTION
3/32" = 1'-0"

5/24/2010 2:47:26 PM

PEC
POWER ENGINEERS COLLABORATIVE LLC
150 Sunny Slope Road
Suite 110
Brookfield, Wisconsin 53005
WWW.PECLLC.COM

PÖYRY
middough
Potter Lawson

PLI Project No:
2009.07.00

State of Wisconsin
Department of Administration
Division of State Facilities

Agency / Institution:
UNIVERSITY OF WISCONSIN SYSTEM

Project Title:
CHARTER STREET REBUILD

Project Location:
MADISON, WI

Sheet Title:
BUILDING SECTIONS

Revisions:

No.	Date:	By:	Description:

Graphic Scale	
DSF Number	09A2L
Set Type	PR
Date Issued	05-24-10
Sheet Number	A302

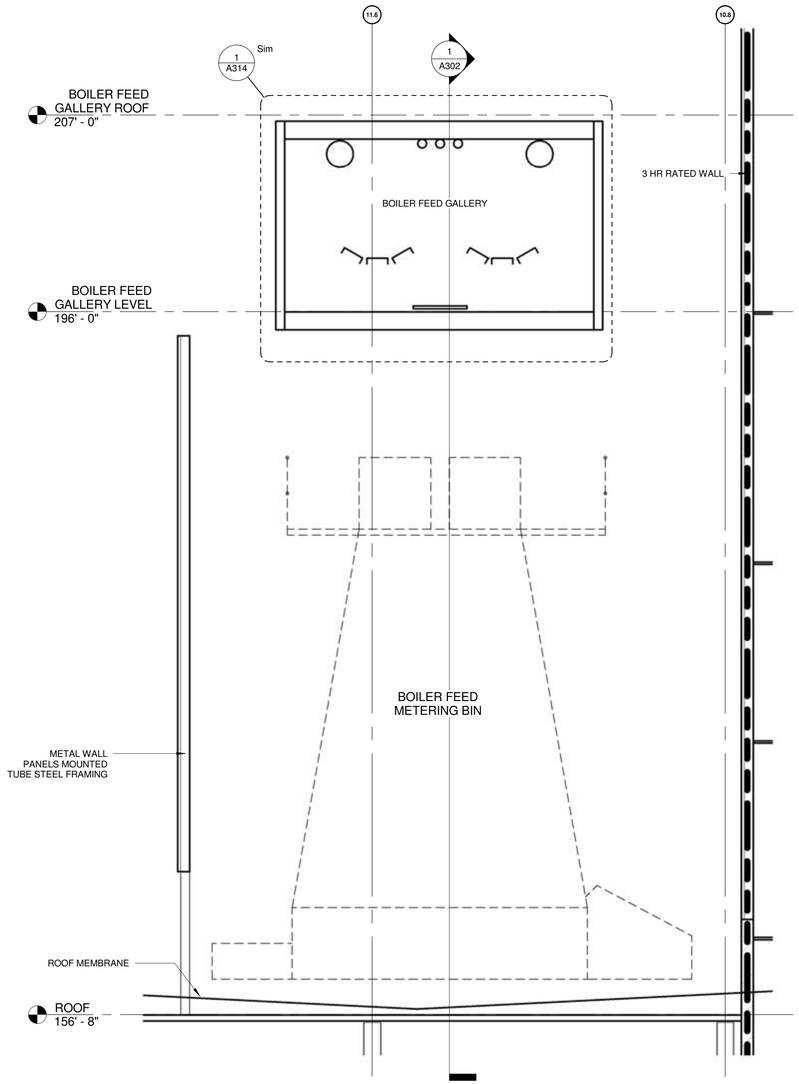

2 A303 DAYTON STREET FUEL BIN ENCLOSURE
1/4" = 1'-0"

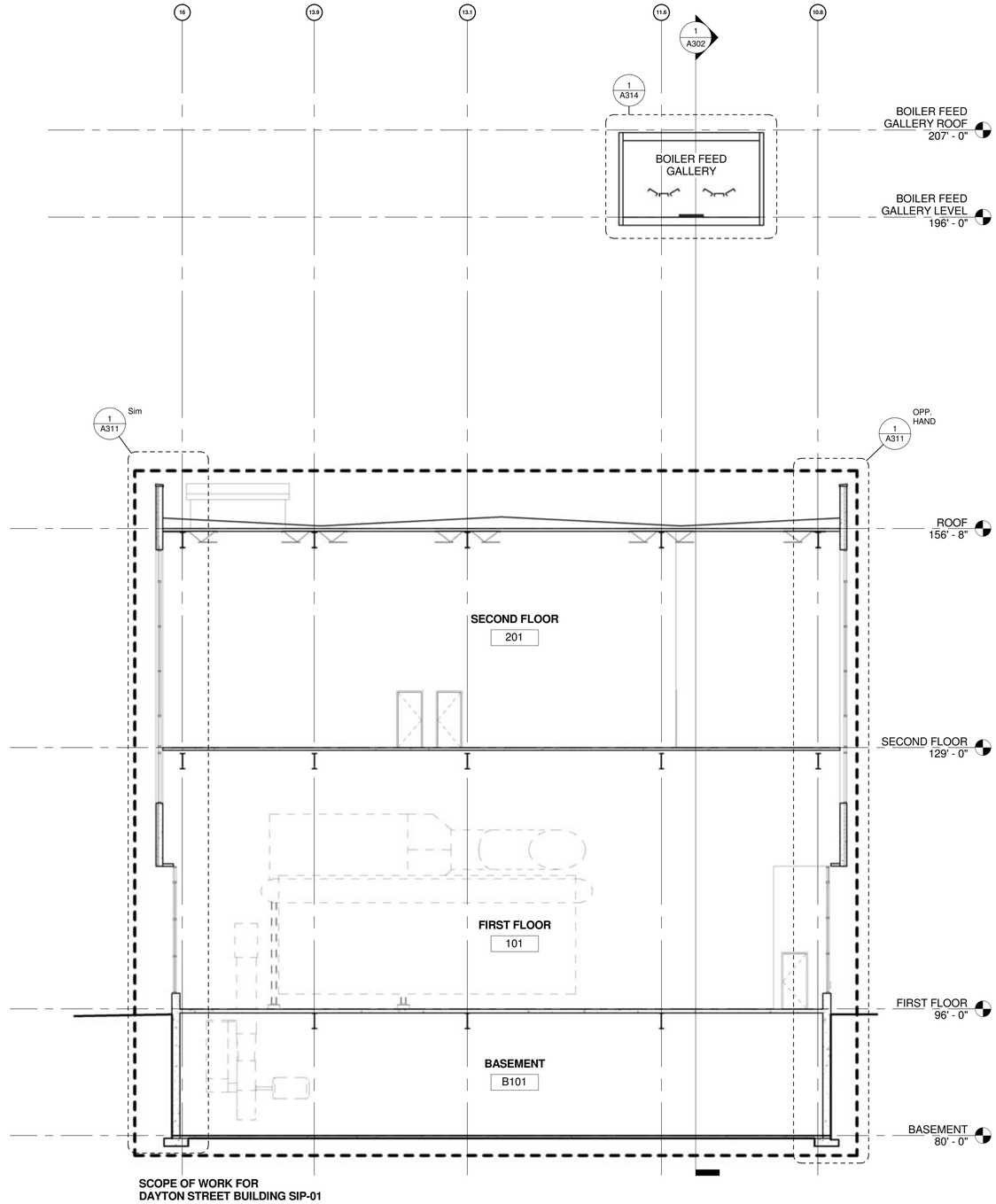

SCOPE OF WORK FOR
DAYTON STREET BUILDING SIP-01

1 A303 DAYTON STREET BUILDING SECTION
1/8" = 1'-0"

PEC
POWER ENGINEERS COLLABORATIVE LLC
150 Sunny Slope Road
Suite 110
Brookfield, Wisconsin 53005
WWW.PECLLC.COM
PÖYRY
middough
Potter Lawson

PLI Project No:
2009.07.00

State of Wisconsin
Department of Administration
Division of State Facilities

Agency / Institution:
UNIVERSITY OF WISCONSIN SYSTEM

Project Title:
CHARTER STREET REBUILD

Project Location:
MADISON, WI

Sheet Title:
BUILDING SECTIONS

Revisions:

No.	Date:	By:	Description:

Graphic Scale	
DSF Number	09A2L
Set Type	PR
Date Issued	05-24-10
Sheet Number	**A303**

5/24/2010 4:43:03 PM

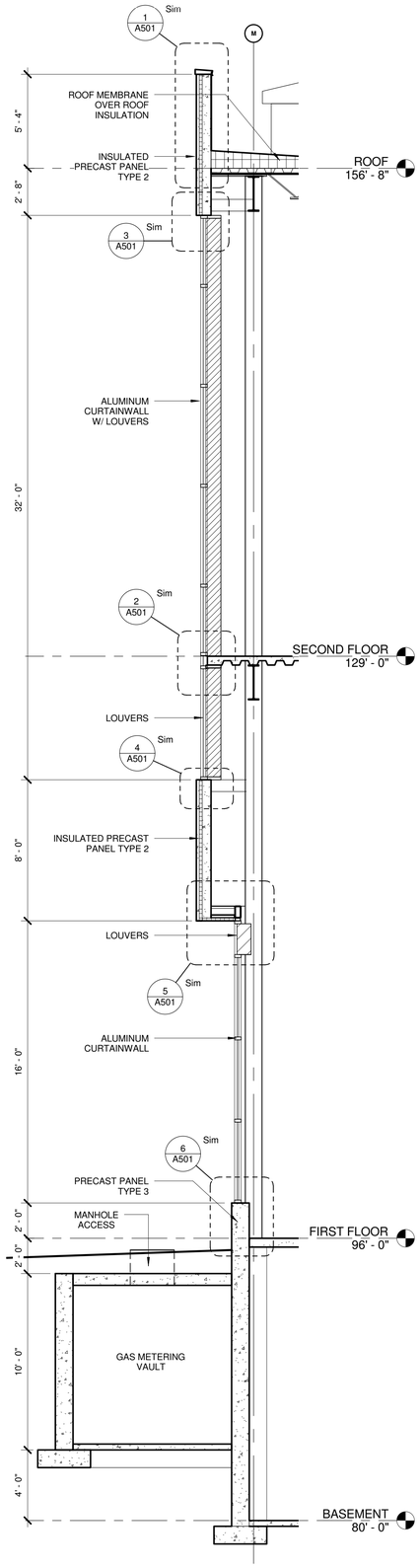

4 A311 WALL SECTION
1/4" = 1'-0"

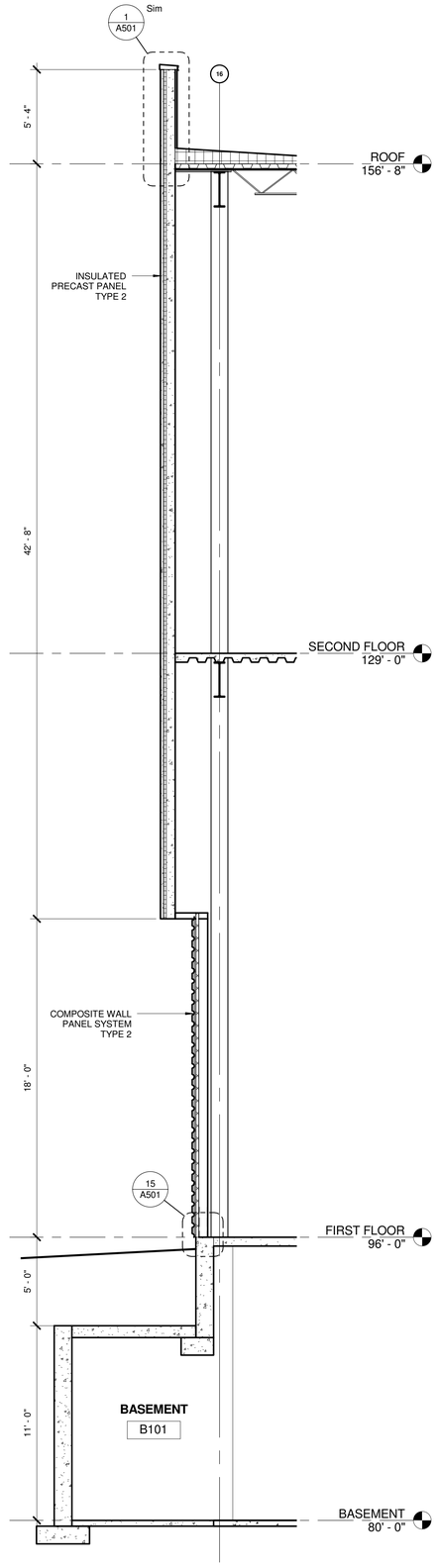

3 A311 WALL SECTION
1/4" = 1'-0"

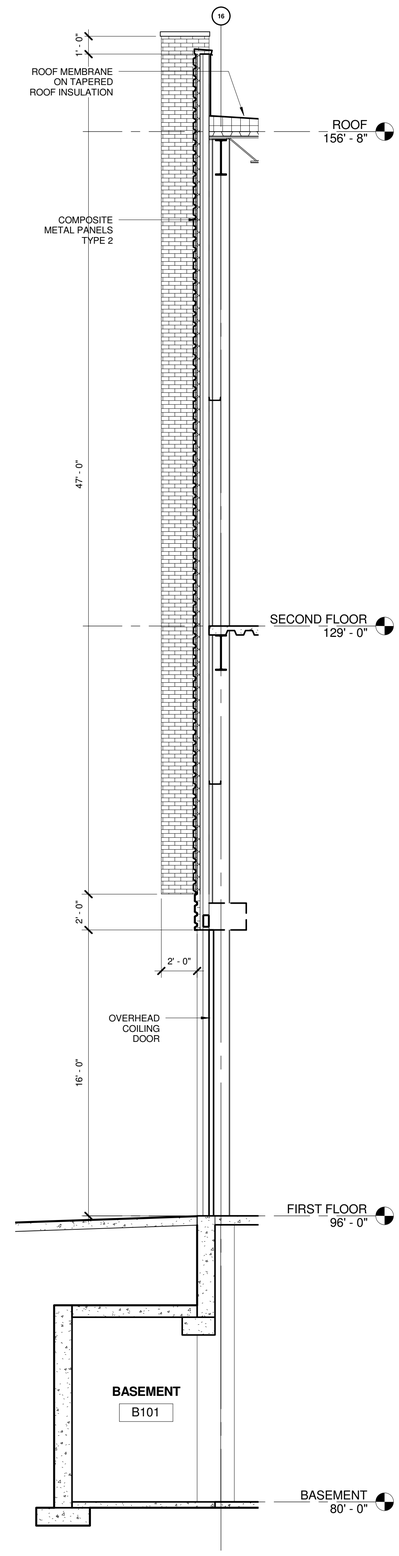

2 A311 WALL SECTION
1/4" = 1'-0"

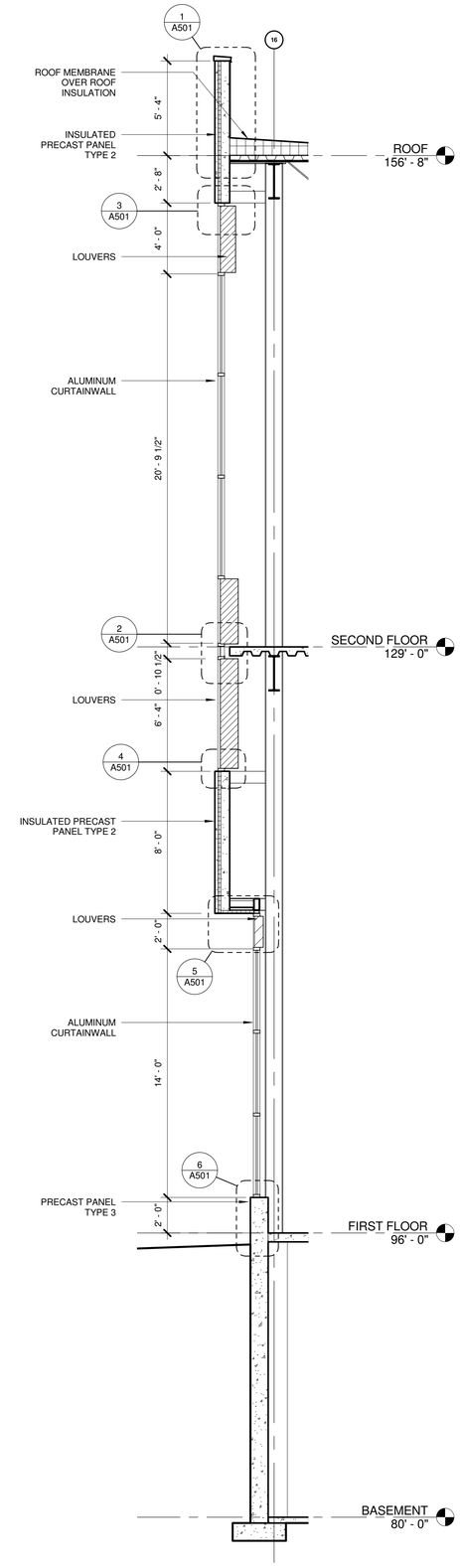

1 A311 WALL SECTION
1/4" = 1'-0"

PEC
POWER ENGINEERS COLLABORATIVE LLC
150 Sunny Slope Road
Suite 110
Brookfield, Wisconsin 53005
WWW.PECLLC.COM

PÖYRY
middough
Potter Lawson

PLI Project No:
2009.07.00

State of Wisconsin
Department of Administration
Division of State Facilities

Agency / Institution:
UNIVERSITY OF WISCONSIN SYSTEM

Project Title:
CHARTER STREET REBUILD

Project Location:
MADISON, WI

Sheet Title:
WALL SECTIONS

Revisions:

No.	Date:	By:	Description:

Graphic Scale	
DSF Number	09A2L
Set Type	PR
Date Issued	05-24-10
Sheet Number	A311

5/24/2010 2:49:23 PM

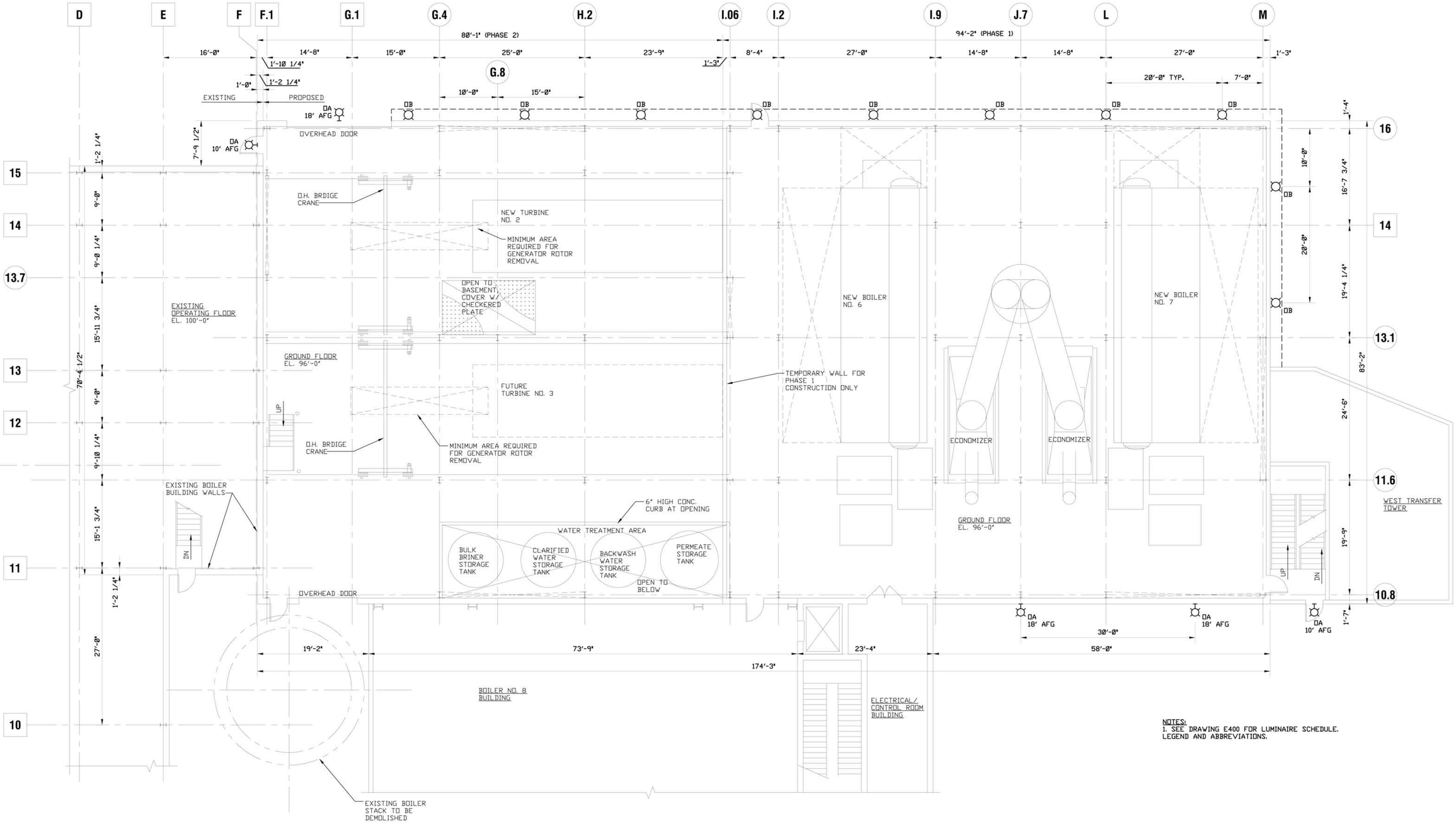

NOTES:
1. SEE DRAWING E400 FOR LUMINAIRE SCHEDULE. LEGEND AND ABBREVIATIONS.

EXTERIOR LIGHTING PLAN
1/8"=1'-0"

PRELIMINARY
NOT FOR DESIGN OR CONSTRUCTION

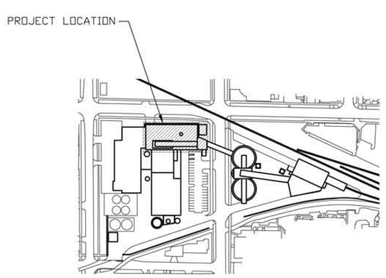

KEY PLAN

PEC
POWER ENGINEERS COLLABORATIVE LLC
150 Sunny Slope Road
Suite 110
Brookfield, Wisconsin 53005
WWW.PECLLC.COM

PÖYRY
PÖYRY (APPLETON) LLC APPLETON, WISCONSIN

middough

Potter Lawson

State of Wisconsin
Department of Administration
Division of State Facilities

Agency / Institution:
UNIVERSITY OF WISCONSIN, MADISON

Project Title:
CHARTER STREET REBUILD

Project Location:
MADISON, WI.

Sheet Title:
DAYTON STREET BUILDING
EXTERIOR LIGHTING PLAN

Revisions:

No.	Date:	By:	Description:
△		-	-

Graphic Scale	
DSF Number	09A2L
Set Type	PR
Date Issued	05/24/10
Sheet Number	E100

ABBREVIATIONS

THESE ABBREVIATIONS COMPRISE A STANDARD LIST; ALL WORDS MAY NOT APPEAR IN THIS PROJECT

A OR AMP	AMPERE
A/C	AIR CONDITIONING
a.c	ABOVE COUNTER
AC	ALTERNATING CURRENT OR ARMORED CABLE
AF	AMP FRAME
AFF	ABOVE FINISHED FLOOR
AFG	ABOVE FINISHED GRADE
AFS	ABOVE FINISHED STEEL
AHJ	AUTHORITY HAVING JURISDICTION
AHU	AIR HANDLER UNIT
AIC	AMPERE INTERRUPTING CURRENT
AL	ALUMINUM
ARC	ALUMINUM RIGID CONDUIT
AT	AMP TRIP
ATS	AUTOMATIC TRANSFER SWITCH
AUX	AUXILIARY CONTACT
AWG	AMERICAN WIRE GAUGE
BLDG	BUILDING
BRKR	BREAKER
C	CONDUIT
CB	CIRCUIT BREAKER
CLNG	CEILING
CHN	CHAIN
CKT	CIRCUIT
COM	COMMON
CP	CONTROL PANEL
CR	CORROSION RESISTANT
CU	COPPER
DC	DIRECT CURRENT
DH+	DATA HIGHWAY PLUS
DIP	DUST IGNITION PROOF
DISC	DISCONNECT
DN	DOWN
DWG	DRAWING
E.C.	ELECTRICAL CONTRACTOR
EF	EXHAUST FAN
EG	ENCLOSED & GASKETED
EGC	EQUIPMENT GROUNDING CONDUCTOR
ELEC	ELECTRIC
ELEV	ELEVATOR OR ELEVATION
EM	EMERGENCY
EMT	ELECTRICAL METALLIC TUBING
EOL	ELECTRONIC OVERLOAD
EPB	EMERGENCY STOP PUSH BUTTON
EPC	EMERGENCY PULL CORD
EQ	EQUIPMENT
E-STOP	EMERGENCY STOP
EWC	ELECTRIC WATER COOLER
EWH	ELECTRIC WATER HEATER
EXP	EXPLOSION PROOF
FA	FIRE ALARM
FBO	FURNISHED BY OTHERS
FLA	FULL LOAD AMPS
FLU	FLUORESCENT
FU	FUSE OR FUSIBLE
FVNR	FULL VOLTAGE NON-REVERSING
FVR	FULL VOLTAGE REVERSING
FWE	FURNISHED WITH EQUIPMENT
G.C.	GENERAL CONTRACTOR
GEC	GROUNDING ELECTRODE CONDUCTOR
GFC	GROUND FAULT CIRCUIT
GFEPD	GROUND FAULT EQUIPMENT PROTECTION DEVICE
GFCI	GROUND FAULT CIRCUIT INTERRUPTER
GND	GROUND

HOA	HAND-OFF-AUTOMATIC STATION
HBS	HOT BEARING SENSOR
HID	HIGH INTENSITY DISCHARGE
HP	HORSE POWER
HPS	HIGH PRESSURE SODIUM
HRG	HIGH RESISTANCE GROUND
HTG	HEATING
HTP	HEAT TRACE PANEL
HV	HIGH VOLTAGE
HVAC	HEATING/VENTILATING/AIR CONDITIONING
HZ	HERTZ (CYCLES)
IC	INTERRUPTING CURRENT
IFC	ISSUE FOR CONSTRUCTION
IGR	ISOLATED GROUND RECEPTACLE
IMC	INTERMEDIATE METAL CONDUIT
INC	INCANDESCENT
IPB	ILLUMINATED PUSH BUTTON
IPP	ILLUMINATED PUSH/PULL BUTTON
ISB	INTEGRATED SWITCHBOARD
ISO	ISOLATED OR ISOLATION
ISS	ILLUMINATED SELECTOR SWITCH
IR	INTERRUPTING RATING
JB OR JBOX	JUNCTION BOX
KA	THOUSAND-AMPERES
KAIC	THOUSAND-AMPERES INTERRUPTING CAPACITY
KAIR	THOUSAND-AMPERES INTERRUPTING RATING
KCMIL	THOUSAND CIRCULAR MIL
KSS	KEYED SELECTOR SWITCH
KV	KILOVOLT
KVA	KILOVOLT-AMPERE
KVAR	KILOVOLT-AMPERE REACTIVE
KW	KILOWATT
LCP	LOCAL CONTROL PANEL
LCS	LOCAL CONTROL STATION
LD	LOCAL DISCONNECT
LO	LOCK-OUT OR LOADOUT
LP	LIGHTING PANEL
LT	LIGHT
LTG	LIGHTING
LV	LOW VOLTAGE
mA	MILLI AMP
MAX	MAXIMUM
M.C.	MECHANICAL CONTRACTOR
MCB	MAIN CIRCUIT BREAKER
MCC	MOTOR CONTROL CENTER
MCP	MOTOR CIRCUIT PROTECTOR
MDP	MAIN DISTRIBUTION PANEL
MECH	MECHANICAL
MFS	MAIN FUSIBLE SWITCH
MH	METAL HALIDE
MIN	MINIMUM
MLO	MAIN LUG ONLY
MMS	MANUAL MOTOR STARTER
MS	MOTOR STARTER
MTD	MOUNTED
MTR	MOTOR
MTS	MANUAL TRANSFER SWITCH
N OR NEUT	NEUTRAL
NC	NORMALLY CLOSED
NEC	NATIONAL ELECTRICAL CODE
NEMA	NATIONAL ELECTRICAL MANUFACTURERS ASSOCIATION
NL	NIGHT LIGHT
NO	NORMALLY OPEN OR NUMBER
NTS	NOT TO SCALE
OCPD	OVER-CURRENT PROTECTION DEVICE
OH	OVERHEAD
OL(S)	OVERLOAD(S)
P	
PA	
PB	PUSHBUTTON
PH OR ø	PHASE
PL	PILOT LIGHT

PLC	
PFC	
PNL	
POT	
PR	
pr	
PRV	
PS	
PSI	
PVC	
PWR	
SH	
SHEET	
SMALL LOGIC CONTROLLER	
SMART MOTOR CONTROLLER	
SELECTOR SWITCH OR SOFT START	
SOLID STATE CONTROLLER	
SOLID STATE STARTER	
SOLID STATE	
SWITCH	
SWITCHBOARD	
SWITCHGEAR	
T OR TRANS	TRANSFORMER
TC	TEMPERATURE CONTROL
TDR	TIME DELAY RELAY
TEL	TELEPHONE
TOS	TOP OF SLAB OR STEEL
TSP	TWISTED SHIELDED PAIR
TVSS	TRANSIENT VOLTAGE SURGE SUPPRESSOR
TYP	TYPICAL
UG	UNDERGROUND
UH	UNIT HEATER
UL	UNDERWRITERS LABORATORIES
UNO	UNLESS NOTED OTHERWISE
UPS	UNINTERRUPTABLE POWER SUPPLY
UR	UNDERWRITERS RECOGNIZED
UTP	UNSHIELDED TWISTED PAIR
UV	UNIT VENTILATOR
V	VOLT
VFD	VARIABLE FREQUENCY DRIVE
VFI	VACUUM FAULT INTERRUPTER
W	WATT OR WIRE
w/	WITH
WC	WATER COOLER
WH	WATER HEATER
WHSE	WAREHOUSE
WP	WEATHER PROOF
WTR	WATER
XFMR	TRANSFORMER
XP	EXPLOSION PROOF

LUMINAIRE SCHEDULE

TYPE	MFGR	CATALOG NO.	DESCRIPTION	VOLTS	LAMPS QTY	LAMPS TYPE	LAMPS WATTS	LAMPS CATALOG NO	TOTAL FIXT WATTS	MOUNTING	REMARKS
OA	HUBBELL	LMC-100P8-1	PULSE START METAL HALIDE FULL CUTOFF WALL PACK	277	1	PMH	100	MH 100/U/PS	125	WALL	DARK BRONZE
OB	PRESCOLITE	LF6MH70EB277V-6MHV	6" VERTICAL METAL HALIDE WALL WASH DOWNLIGHT	277	1	MH	70	MH 70/U	88	RECESSED	CLEAR ALZAK REFLECTOR

LEGEND:

- SUSPENDED OR RECESSED MOUNTED LIGHTING FIXTURE
- WALL OR COLUMN MOUNTED LIGHTING FIXTURE
- STANCHION MOUNTED LIGHTING FIXTURE
- OUTDOOR POLE MOUNTED LIGHTING FIXTURE, SINGLE HEAD
- OUTDOOR POLE MOUNTED LIGHTING FIXTURE, TWO HEADS
- 8 FOOT FLUORESCENT LIGHT FIXTURE
- 4 FOOT FLUORESCENT LIGHT FIXTURE
- 4 FOOT FLUORESCENT WRAPAROUND
- DUPLEX RECEPTACLE, 4'-0" AFF UNO (* IF SUBSCRIPT APPLIES SEE BELOW)
  WP = WEATHERPROOF COVER
  CR = CORROSION RESISTANT
  GFI = GROUND FAULT CIRCUIT INTERRUPTER
  NOTE: SEE SPEC. 262726 FOR SPECIAL REQUIREMENTS
- DUPLEX RECEPTACLE, 18" AFF UNO (* IF SUBSCRIPT APPLIES SEE BELOW)
  WP = WEATHERPROOF COVER
  CR = CORROSION RESISTANT
  GFI = GROUND FAULT CIRCUIT INTERRUPTER
  NOTE: SEE SPEC. 262726 FOR SPECIAL REQUIREMENTS
- EMERGENCY BATTERY PACK C/W TWIN EMERGENCY LAMPS
- WALL MOUNTED EXIT LIGHT
- 480V THREE PHASE WELDING RECEPTACLE
- VOICE/DATA OUTLET, LG JUNCTION BOX WITH 3/4" CONDUIT STUBBED TO ACCESSIBLE AREA.
- $* SINGLE POLE LIGHT SWITCH, 4'-0" AFF UNLESS NOTED OTHERWISE
  (* IF SUBSCRIPT APPLIES SEE BELOW)
  3 = 3-WAY SWITCH
  WP = WEATHERPROOF COVER
  NOTE: SEE SPEC. 262726 FOR SPECIAL REQUIREMENTS
- FUSED DISCONNECT SWITCH
- MANUAL MOTOR STARTER
- COMBINATION STARTER
- MOTOR
- EQUIPMENT CONNECTION
- S / T SMOKE/HEAT DETECTOR COMBINATION
- T LINE VOLTAGE THERMOSTAT
- SC FAN SPEED CONTROLLER

PRELIMINARY
NOT FOR DESIGN OR CONSTRUCTION

PEC
POWER ENGINEERS COLLABORATIVE LLC
150 Sunny Slope Road
Suite 110
Brookfield, Wisconsin 53005
WWW.PECLLC.COM

PÖYRY
PÖYRY (APPLETON) LLC APPLETON, WISCONSIN

middough

Potter Lawson

State of Wisconsin
Department of Administration
Division of State Facilities

Agency / Institution:
UNIVERSITY OF WISCONSIN, MADISON

Project Title:
CHARTER STREET REBUILD

Project Location:
MADISON, WI.

Sheet Title:
DAYTON STREET BUILDING
LUMINAIRE SCHEDULE, LEGEND AND ABBREVIATIONS

Revisions:

No.	Date:	By:	Description:
1		-	-

Graphic Scale	
DSF Number	09A2L
Set Type	PR
Date Issued	05/24/10
Sheet Number	E400

Submitted by Visual Impact Lighting, LLC

Job Name:	Catalog Number:	Type:
CHARTER STREET	6MHV	OB
	Notes:	VISUAL10-38282

6" Vertical Metal Halide Wall Wash Downlight

LF6MH

50W, 70W or 100W ED17 Lamp

DATE: TYPE:

FIRM NAME:

PROJECT:

LiteFrame

Ceiling Cutout: 6¼"
Maximum Ceiling Thickness: 1¼"
For conversion to millimeters, multiply inches by 25.4
Not to Scale

APPLICATIONS:
The LiteFrame® LF6MH Series offers an open-rated metal halide wall wash downlight fixture. Available in three different wattages, this luminaire is ideal for a wide variety of high ceiling applications including commercial, retail, hospitality, atrium, and design build areas.

HOUSING:
One-piece 22-gauge galvanized steel platform. Diecast aluminum heat sink. Prewired J-box. Thermal protector.

REFLECTOR:
High purity aluminum Alzak semi-diffuse reflector. Self-trim standard. Painted white self-trim (WT) available as an option.

BALLAST:
Electronic ballast included with housing. Accessible from below ceiling. See reverse side for ballast data.

LAMP:
One (1) 50W, 70W, or 100W ED17 open-rated coated lamp. Lamp furnished by others.

SOCKET:
Protected medium base porcelain socket with nickel plated screw shell. Protected socket prevents standard/unprotected metal halide lamps from being used.

INSTALLATION:
Universal mounting brackets accept ½" EMT conduit (by others), or Prescolite B24 or B6 bar hangers. Order bar hangers separately.

LABELS:
UL, CSA listed for damp locations. Approved for through wiring (4 in, 4 out), except when used with QR and DCB options. Thermally protected. Non-IC rated.

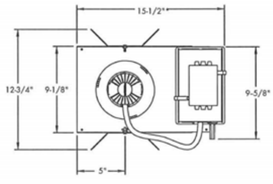

*Add 4" for 277V QR stepdown transformer

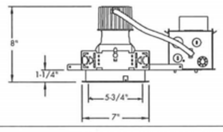

Order housing, reflector and accessories separately.

CATALOG NUMBER: EXAMPLE: LF6MH70EB120V 6MHVWW

HOUSING	VOLTAGE	HOUSING OPTIONS	REFLECTOR	REFLECTOR COLOR	WALL WASH	REFLECTOR OPTIONS	ACCESSORIES
❑ **LF6MH50EB** 50W MH open-rated fixture electronic ballast.	❑ **120V**	❑ **DCB**[1] Auxiliary socket (see note on back page)	❑ **6MHV** 6" Alzak Semi-Diffuse	❑ **BLANK** Clear Alzak	❑ **WW** Wall Wash Reflector	❑ **DCB**[1] Auxiliary socket (see note on back page)	❑ **B24** Set of (2) 24" bar hangers for T-bar ceilings
❑ **LF6MH70EB** 70W MH open-rated fixture electronic ballast.	❑ **277V**	❑ **FSDFA** Fuse kit installed at factory		❑ **CG** Champagne Gold Alzak		❑ **QR**[1] Quartz restrike, (see note on back page)	❑ **B6** Set of (2) bar hangers for ceilings joists up to 24" centers
❑ **LF6MH100EB** 100WMH open-rated fixture electronic ballast.	❑ **347V** Magnetic Ballast housing only (Contact technical support)	❑ **QR**[1] Quartz restrike, (see note on back page)		❑ **PW** Pewter Alzak		❑ **TRG** Trim ring gasket (factory installed)	❑ **FSDFI** Fuse kit for field installation
				❑ **WE** Wheat Alzak		❑ **WT** White flange	
				❑ **LW** Light Wheat Alzak			

[1]T4 QR, DCB lamp should not exceed wattage of main HID lamp.
Above ceiling access required for QR, DCB reflector installation.

prescolite
A Division of Hubbell Lighting, Inc.

In a continuing effort to offer the best product possible we reserve the right to change, without notice, specifications or materials that in our opinion will not alter the function of the product.
Web: **www.prescolite.com** • Tech Support: **(888) 777-4832**

LFR-HID-022

Submitted by Visual Impact Lighting, LLC

Job Name:	Catalog Number:	Type:
CHARTER STREET	LF6MH70EB120V	OB
	Notes:	VISUAL10-38282

6" Vertical Metal Halide Wall Wash Downlight
LF6MH
50W, 70W or 100W ED17 Lamp

DATE: TYPE:
FIRM NAME:
PROJECT:
LiteFrame
Ceiling Cutout: 6¼"
Maximum Ceiling Thickness: 1¼"
For conversion to millimeters, multiply inches by 25.4
Not to Scale

APPLICATIONS: The LiteFrame® LF6MH Series offers an open-rated metal halide wall wash downlight fixture. Available in three different wattages, this luminaire is ideal for a wide variety of high ceiling applications including commercial, retail, hospitality, atrium, and design build areas.
HOUSING: One-piece 22-gauge galvanized steel platform. Diecast aluminum heat sink. Prewired J-box. Thermal protector.
REFLECTOR: High purity aluminum Alzak semi-diffuse reflector. Self-trim standard. Painted white self-trim (WT) available as an option.
BALLAST: Electronic ballast included with housing. Accessible from below ceiling. See reverse side for ballast data.
LAMP: One (1) 50W, 70W, or 100W ED17 open-rated coated lamp. Lamp furnished by others.
SOCKET: Protected medium base porcelain socket with nickel plated screw shell. Protected socket prevents standard/unprotected metal halide lamps from being used.
INSTALLATION: Universal mounting brackets accept ½" EMT conduit (by others), or Prescolite B24 or B6 bar hangers. Order bar hangers separately.
LABELS: UL, CSA listed for damp locations. Approved for through wiring (4 in, 4 out), except when used with QR and DCB options. Thermally protected. Non-IC rated.

*Add 4" for 277V QR stepdown transformer

Order housing, reflector and accessories separately.

CATALOG NUMBER: EXAMPLE: LF6MH70EB120V 6MHVWW

HOUSING	VOLTAGE	HOUSING OPTIONS	REFLECTOR	REFLECTOR COLOR	WALL WASH	REFLECTOR OPTIONS	ACCESSORIES
❑ **LF6MH50EB** 50W MH open-rated fixture electronic ballast.	❑ **120V**	❑ **DCB**[1] Auxiliary socket (see note on back page)	❑ **6MHV** 6" Alzak Semi-Diffuse	❑ **BLANK** Clear Alzak	❑ **WW** Wall Wash Reflector	❑ **DCB**[1] Auxiliary socket (see note on back page)	❑ **B24** Set of (2) 24" bar hangers for T-bar ceilings
❑ **LF6MH70EB** 70W MH open-rated fixture electronic ballast.	❑ **277V**	❑ **FSDFA** Fuse kit installed at factory		❑ **CG** Champagne Gold Alzak		❑ **QR**[1] Quartz restrike (see note on back page)	❑ **B6** Set of (2) bar hangers for ceilings joists up to 24" centers
❑ **LF6MH100EB** 100WMH open-rated fixture electronic ballast.	❑ **347V** Magnetic Ballast housing only (Contact technical support)	❑ **QR**[1] Quartz restrike, (see note on back page)		❑ **PW** Pewter Alzak		❑ **TRG** Trim ring gasket (factory installed)	❑ **FSDFI** Fuse kit for field installation
				❑ **WE** Wheat Alzak		❑ **WT** White flange	
				❑ **LW** Light Wheat Alzak			

[1]T4 QR, DCB lamp should not exceed wattage of main HID lamp.
Above ceiling access required for QR, DCB reflector installation.

prescolite
A Division of Hubbell Lighting, Inc.

In a continuing effort to offer the best product possible we reserve the right to change, without notice, specifications or materials that in our opinion will not alter the function of the product.
Web: **www.prescolite.com** • Tech Support: **(888) 777-4832**

LFR-HID-022

Submitted by Visual Impact Lighting, LLC

Job Name:	Catalog Number:	Type:
CHARTER STREET	LF6MH70EB120V	OB
	Notes:	VISUAL10-38282

PHOTOMETRIC DATA

LiteFrame® - 6" Vertical Metal Halide Wall Wash Downlight - LF6MH

BALLAST DATA

	50W		70W		100W	
	120V	277V	120V	277V	120V	277V
Power Factor	>.90	>.90	>.90	>.90	>.90	>.90
Regulation Line Voltage	±10%	±10%	±10%	±10%	±10%	±10%
Output Wattage	±0.5%	±0.5%	±0.5%	±0.5%	±0.5%	±0.5%
Min. Ambient Starting Temp.	-30°C(-20°F)	-30°C (-20°F)	-30°C (-20°F)	-30°C (-20°F)	-30°C (-20°F)	-30°C (-20°F)
Input Watts	56	55	80	79	110	109
Input Amps	0.47	0.20	0.67	0.29	0.92	0.40
Sound Rating	A	A	A	A	A	A

LAMP DATA HID

Rated Watts	50W ED17	70W ED17	100W ED17
Rated Lumens	3400	5500	7900
Efficacy (LPW)	68	79	79
Rated Life	10,000	12,000	15,000
CRI	70	70	70

AVERAGE INITIAL FOOTCANDLES ON WORKPLANE

Assumptions:
1. Ceiling 80% Wall 50% Floor 20%
2. 4 Luminaires evenly spaced in the center of the room.
3. The room is square and has a width and length equal to twice the luminaire spacing (LS).
4. RCR is Room Cavity Ratio.
5. Dirt and Lumen Depreciation Factors are 1.0
6. Ballast Factor is 1.0 for ballasted fixtures.

LS (Feet)	(Footcandles) RCR1	RCR3	RCR7
7.0	58	47	32
8.0	44	36	24
9.0	35	28	19
10.0	28	23	16
11.0	23	19	13
12.0	20	16	11
13.0	17	14	9
14.0	14	12	8
15.0	13	10	7

Test No. 669

MULTIPLE UNITS — UNITS ON 3' CENTER — UNITS ON 4' CENTER

3' DISTANCE FIXTURE MOUNTED OUT FROM WALLS
FOOTCANDLE DISTRIBUTION ON WALL SURFACE

DISTANCE FROM FIXTURE IN FEET											
1	42.4	36.6	10.5	3.1		87.2	81.4	87.2		69.7	42.9	69.7
2	56.6	42.0	18.6	7.7		102.5	103.4	102.5		74.0	63.4	74.0
3	36.4	32.1	18.7	8.7		85.7	87.5	85.7		57.0	59.7	57.0
4	20.6	20.5	16.2	9.0		66.4	65.6	66.4		43.0	46.8	43.0
5	12.2	12.4	11.8	8.5		49.4	48.7	49.4		33.4	34.0	33.4
6	7.7	7.8	7.8	6.9		36.9	36.9	36.9		26.1	25.4	26.1
7	5.2	5.2	5.3	5.1		28.1	28.3	28.3		20.2	19.9	20.2
8	3.7	3.7	3.8	3.8		22.4	22.2	22.4		16.2	16.1	16.2

MULTIPLE UNITS — UNITS ON 3' CENTER — UNITS ON 4' CENTER

3' DISTANCE FIXTURE MOUNTED OUT FROM WALLS
FOOTCANDLE DISTRIBUTION ON WALL SURFACE

DISTANCE FROM FIXTURE IN FEET											
1	15.5	11.9	3.7	2.3		21.7	19.8	21.7		18.4	12.6	18.4
2	29.6	24.3	14.0	6.8		43.1	44.3	43.1		37.1	29.9	37.1
3	25.3	22.3	14.9	8.6		46.5	46.7	46.5		36.5	33.5	36.5
4	20.1	18.4	13.7	8.5		41.7	42.7	41.7		31.7	32.1	31.7
5	13.8	13.6	11.9	8.3		36.0	36.8	36.0		26.6	28.8	26.6
6	9.6	9.6	9.2	7.5		30.4	30.5	30.4		22.4	23.3	22.4
7	6.7	6.8	6.7	6.3		25.2	24.7	25.2		19.0	19.2	19.0
8	4.9	4.9	5.0	4.8		20.6	20.5	20.6		16.0	15.8	16.0

For approximate calculations for gold reflector use a .9 multiplier. Actual data available upon request

Test no. 669

LF6MH/6MHVWW Clear Refl

Lamp: 1-70W/ED17 MP70/C/U/MED-SYLVANIA
Spacing Criteria: 1.2
Efficiency: 56.2%

CANDLEPOWER DISTRIBUTION

Test No. 669

CANDLEPOWER SUMMARY

Angle	0°	180°
0	1095	1095
5	1059	1078
10	973	1169
15	907	1335
20	910	1596
25	915	1753
30	895	1711
35	830	1494
40	745	1026
45	631	665
50	557	403
55	509	256
60	419	165
65	301	102
70	184	65
75	95	41
80	42	27
85	5	9
90	0	0

COEFFICIENTS OF UTILIZATION

Zonal Cavity Method

Room Cavity	% Effective Ceiling Cavity Reflectance: 80%			70%			50%			30%			10%		
	20% Effective Floor Cavity Reflectance														
	% Wall Reflectance														
	70	50	30	10	70	50	30	10	50	30	10	50	30	10	50	30	10
1	.62	.60	.58	.57	.61	.59	.57	.56	.57	.55	.54	.55	.54	.52	.53	.52	.51
2	.58	.54	.51	.48	.57	.53	.50	.48	.51	.49	.47	.49	.47	.46	.48	.46	.45
3	.54	.49	.45	.42	.53	.48	.44	.41	.46	.43	.41	.45	.42	.40	.43	.41	.39
4	.50	.44	.40	.37	.49	.43	.39	.36	.42	.38	.36	.41	.38	.35	.40	.37	.35
5	.46	.40	.35	.32	.46	.40	.35	.32	.38	.34	.32	.38	.34	.32	.36	.33	.31
6	.43	.36	.32	.29	.42	.36	.32	.29	.35	.31	.28	.34	.31	.28	.33	.30	.28
7	.40	.33	.29	.26	.39	.33	.29	.26	.32	.28	.25	.31	.28	.25	.30	.27	.25
8	.37	.30	.26	.23	.37	.30	.26	.23	.29	.26	.23	.29	.25	.23	.28	.25	.23
9	.35	.28	.24	.21	.34	.28	.24	.21	.27	.23	.21	.27	.23	.21	.26	.23	.21
10	.33	.26	.22	.19	.32	.26	.22	.19	.25	.22	.19	.25	.21	.19	.24	.21	.19

Test No. 669

LF6MH/6MHVWW

NOTES

The DCB option uses a quartz T4 double contact bayonet base lamp to provide emergency light during power outages. The DCB socket must be field wired into an auxiliary emergency power supply circuit for emergency use.

The QR option uses a quartz T4 double contact bayonet base lamp to provide light continuously during cold start or hot restrike until the HID lamp is at approximately 70% or more of its rated light output.

prescolite

Web: www.prescolite.com • Tech Support: (888) 777-4832
701 Millennium Blvd., Greenville, SC 29607 U.S.A. • Phone (864) 678-1000

Specifications subject to change without notice. • Printed in U.S.A. • LFR-HID-022 • 3/5/08

HUBBELL® Hubbell Lighting, Inc.

Submitted by Visual Impact Lighting, LLC

Job Name:	Catalog Number:	Type:
CHARTER STREET	LMC-100P8-1	OA
	Notes:	VISUAL10-38282

ORDERING INFORMATION

ORDERING EXAMPLE

LMC	-	175P	-	8	-	1	-	TL
Series		Wattage/ Source		Voltage		Color		Options

SERIES

LMC	Laredo Medium Cutoff

WATTAGE/SOURCE

	Pulse Start Metal Halide	
70P	70W	
100P	100W	
150P	150W	
175P	175W	
	Metal Halide	
175H	175W	
	Electronic MH	
70E	70W	
100E	100W	
	Electronic Fluorescent	
42F[1]	42/32/26W	
	HPS	
70S	70W	
150S	150W	

VOLTAGE

8	Quad-Tap® (120, 208, 240, 277V)
6	Tri-Tap® (120, 277, 347V)
9	480V
E	220/240V 50Hz (standard on Electronic or Fluorescent ballasts)
0	Less Ballast

FINISH

1	Bronze
2	Black
3	Gray
4	White
5	Platinum

OPTIONS

PC(X)	Button Photocontrol replace X with voltage, i.e.: PC(120)
TL	Touch Latch
LP	Lamp Included
F(X)	Fusing replace X with voltage, i.e.: F(120)
QST	Time Delay Quartz stand by system less lamp
EM[2]	DC Bayonet Socket (for remote 120 volt power by others)
EM12[2]	MR11/MR16 Two Pin Socket (for 12V power by others)

1 For With Lamp Option: Indicate desired wattage: LP42, LP32, LP26.
2 Lamps not included.

DIMENSIONS

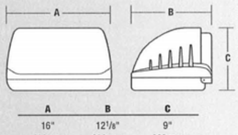

A	B	C
16"	12⅛"	9"
406 mm	308 mm	229 mm

COLOR SELECTIONS

Five standard (Bronze, Black, White, Gray, Platinum Silver).

Custom colors are available (consult factory).

Note: Actual colors may vary due to printing process.

All colors are textured except Platinum Silver.

PHOTOMETRICS

LMC 175H-CS
comfort zone light reduction is 33% with standard internal front shield
15' mounting height

	30'				15'					15'					30'	
	0.5	0.9	1.6	2.4	3.1	3.4	2.3	1.2	2.7	3.4	3.0	2.3	1.4	0.8	0.4	
	0.5	0.8	1.3	1.8	2.6	3.3	2.5	1.7	2.8	3.4	2.4	1.7	1.2	0.7	0.4	
	0.3	0.6	1.1	1.6	2.5	2.8	2.4	2.1	2.5	2.8	2.4	1.6	0.9	0.5	0.3	
15'—	0.3	0.6	1.0	1.6	2.5	2.4	2.2	1.5	2.2	2.4	2.3	1.5	0.9	0.6	0.3	
	0.3	0.6	1.0	1.5	1.8	2.0	1.3	0.7	1.5	2.0	1.8	1.4	0.9	0.5	0.3	
	0.3	0.5	0.8	1.1	1.3	1.2	0.7	0.4	0.8	1.3	1.3	1.0	0.7	0.4	0.3	
30'—	0.2	0.4	0.5	0.6	0.6	0.6	0.4	0.2	0.4	0.6	0.7	0.6	0.5	0.3	0.2	
	.02	0.2	0.3	0.3	0.3	0.3	0.2	0.1	0.2	0.3	0.3	0.3	0.3	0.2	0.1	

LMC 175H
increased output with front shield removed
15' mounting height

	30'				15'					15'					30'	
	0.4	0.7	1.2	1.7	2.1	2.9	3.1	2.1	3.2	2.7	2.0	1.6	1.1	0.6	0.3	
	0.4	0.7	1.1	1.5	2.4	3.8	4.6	4.1	4.7	3.6	2.1	1.5	1.0	0.6	0.4	
15'—	0.3	0.6	1.0	1.7	2.6	3.5	4.0	3.7	4.0	3.3	2.5	1.5	0.9	0.5	0.3	
	0.4	0.6	1.0	1.7	2.6	2.9	3.1	2.5	3.1	2.8	2.4	1.6	0.9	0.6	0.3	
	0.3	0.6	0.9	1.6	1.9	2.3	2.1	1.6	2.2	2.2	1.8	1.4	0.9	0.5	0.3	
30'—	0.3	0.5	0.8	1.1	1.4	1.6	1.3	1.0	1.4	1.6	1.3	1.0	0.7	0.4	0.3	
	0.2	0.4	0.5	0.6	0.7	0.8	0.7	0.5	0.7	0.8	0.7	0.6	0.5	0.3	0.2	
	.01	0.2	0.3	0.3	0.3	0.3	0.3	0.2	0.3	0.4	0.3	0.3	0.2	0.2	0.1	

Sheet Number	Date Issued	Set Type	DSF Number	Graphic Scale
Luminaire Cut Sheets	05-24-10	PR	09A2L	

Revisions: No. | Date: | By: | Description:

Project Title: **CHARTER STREET REBUILD**

Project Location: MADISON, WI

Sheet Title: Unnamed

State of Wisconsin
Department of Administration
Division of State Facilities

Agency / Institution: UNIVERSITY OF WISCONSIN SYSTEM

PU Project No: 2008.07.00

Potter Lawson | midbough | PÖYRY | POWER ENGINEERS COLLABORATIVE LLC 150 Sunny Slope Road Brookfield, Wisconsin 53005 WWW.PECLLC.COM | PEC

THIS DRAWING IS A PRELIMINARY LAYOUT ONLY.
ALL DIMENSIONS ARE TO BE FINALIZED AFTER
FORMAL PURCHASE ORDER AND COMPLETE
ENGINEERING APPROVAL.
CB NB PROPOSAL NO. 24587 – DAVID O.

DO NOT SCALE – USE DIMENSIONS ONLY | "NF"/B.O. INDICATES NOT FURNISHED BY CB NB

DO NOT USE FOR CONSTRUCTION UNLESS APPROVED BELOW

REV.	DATE	DESCRIPTION	DWN	CKD	APPR

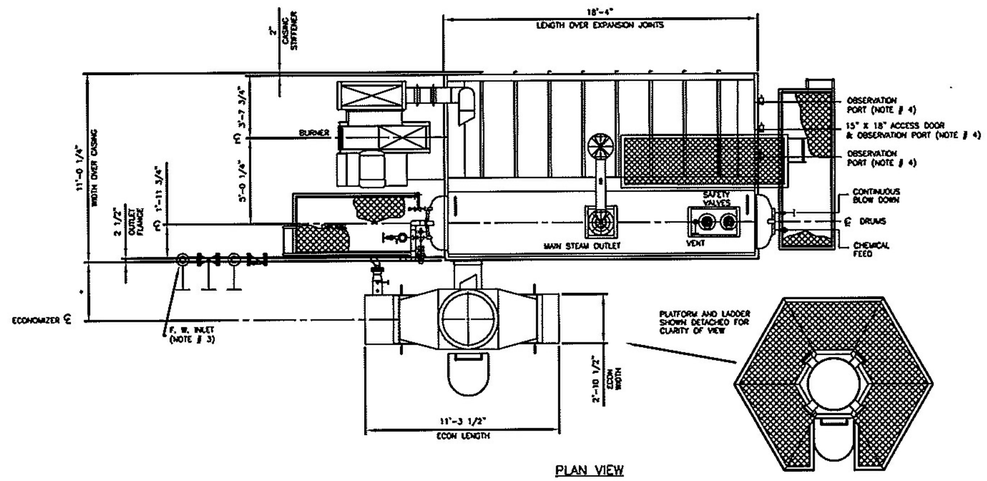

PLAN VIEW

NOTES:

1. DRAWING IS FOR OVERALL SIZE AND ARRANGEMENT ONLY. REFER TO PROPOSAL FOR ACTUAL TRIM LISTING.
2. DRAWING IS NOT TO BE USED FOR CONSTRUCTION PURPOSES.
3. SIZES AND LOCATIONS OF FEEDWATER PIPING AND VALVES IS A REPRESENTATION ONLY, AND IS USED TO SHOW AN EASILY VISIBLE PICTORIAL VIEW.
4. * – DENOTES TO BE DETERMINED. NUMBER AND LOCATION OF OBSERVATION PORTS IS TO BE DETERMINED.
5. BOILER SUPPORT STRUCTURE AND LIFTING LUGS WILL BE SIZED AND LOCATED UPON FINAL ENGINEERING.

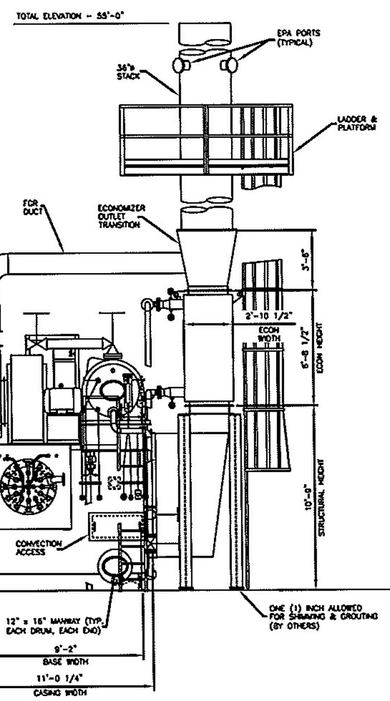

BURNER END VIEW

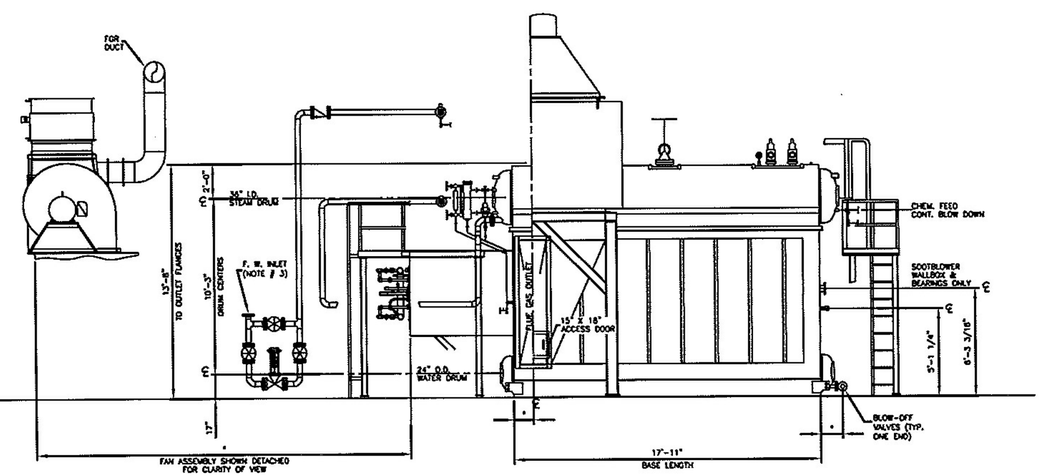

CONVECTION SIDE VIEW

CB NEBRASKA BOILER®
The power of commitment.™

GENERAL ARRANGEMENT SERIES:
NB-2000-50 W/ECON (HIM-STD)

SCALE: NONE	DATE: MAY 08, 2008
DRAWN BY: KENB	CHECKED:
JOB NO: PROPOSAL	SERIAL NO:
QTY:	DRAWING NO: N824587

PEC
POWER ENGINEERS COLLABORATIVE LLC
150 Sunny Slope Road
Suite 110
Brookfield, Wisconsin 53005
WWW.PECLLC.COM

PÖYRY
PÖYRY (APPLETON) LLC APPLETON, WISCONSIN

middough

Potter Lawson

PLI Project No: 2009.07.00

State of Wisconsin
Department of Administration
Division of State Facilities

Agency / Institution: UNIVERSITY OF WISCONSIN SYSTEM

Project Title: CHARTER STREET REBUILD

Project Location: MADISON, WI

Sheet Title: Unnamed

Revisions:

No.	Date:	By:	Description:

Graphic Scale	
DSF Number	09A2L
Set Type	PR
Date Issued	05-24-10
Sheet Number	Boiler

5/25/2010 8:03:20 AM