CITY OF MADISON

CITY ENGINEERING DIVISION
DEPARTMENT OF PUBLIC WORKS
PLAN OF PROPOSED IMPROVEMENT

Madison, Wisconsin

INDEX OF SHEETS

SHEET NO.	D1	STANDARD NOTES
SHEET NO.	D2-D3	TYPICAL SECTIONS
SHEET NO.	O1	OVERVIEW PLAN
SHEET NO.	P1-P5	PLAN & PROFILE
SHEET NO.	U1-U3	UTILITIES PLAN & PROFILE
SHEET NO.	USTM	STORM SCHEDULE
SHEET NO.	L1-L3	LANDSCAPING PLAN
SHEET NO.	X1-X11	CROSS SECTIONS
SHEET NO.	MN1	MAINTENANCE PLAN (CITY USE ONLY)

WESTWIND - PHASE 2

CITY PROJECT NO. 14931
CONTRACT NO. 9386

PHASE LIMITS

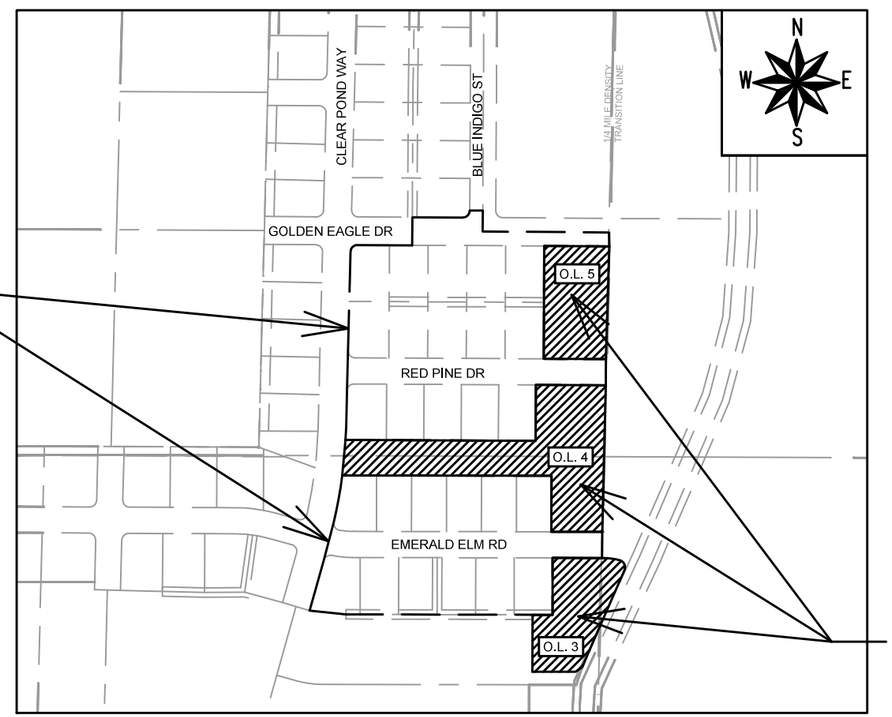

PUBLIC PONDS SEE PROJECT NO. 13921

PUBLIC IMPROVEMENT PROJECT APPROVED

JUNE 9, 2026

BY THE COMMON COUNCIL OF MADISON, WISCONSIN

PUBLIC IMPROVEMENT DESIGN APPROVED BY:

08/12/2026

City Engineer — Date

STREET DESIGNED BY:

WISCONSIN FADI B EL MUSA GONZALEZ E-47872 MADISON WI PROFESSIONAL ENGINEER

08/11/2026

GEOMETRY DESIGNED BY:

WISCONSIN SEAN D MALLOY E-48326 MADISON WI PROFESSIONAL ENGINEER

08/11/2026

STORM SEWER DESIGNED BY:

WISCONSIN JANET SCHMIDT E-34681 MADISON WI PROFESSIONAL ENGINEER

08/11/2026

REVISION 1 - 08/27/2026
- REPLACED SHEETS: L1-L3

NO TREES IN THE RIGHT OF WAY OR ON PUBLIC LANDS SHALL BE TRIMMED, PRUNED, REMOVED OR ADVERSELY AFFECTED IN ANY WAY UNTIL THE DEVELOPER HAS RECEIVED WRITTEN PERMISSION FROM THE CITY ENGINEER OR CITY FORESTER. SAID WRITTEN PERMISSION SHALL INCLUDE LANGUAGE INDICATING THAT SECTION 10.101 OF THE MADISON GENERAL ORDINANCES AND ADMINISTRATIVE PROCEDURE MEMORANDUM NO. 6-2, REFERRING TO NOTIFICATION OF PROPERTY OCCUPANTS AND/OR OWNERS, HAS BEEN COMPLIED WITH.

THE CONTRACTOR MUST CONTACT CITY FORESTRY AT 608-266-4816 OR FORESTRY@CITYOFMADISON.COM TO CONFIRM LAYOUT AND MARK LOCATION OF TERRACE EXCAVATION SITES AT LEAST 24 HOURS BEFORE EXCAVATION.

DEVELOPER MUST SUBMIT A TRAFFIC CONTROL PLAN TO CITY TRAFFIC ENGINEERING AT LEAST 14 DAYS PRIOR TO THE START OF WORK. WORK SHALL NOT PROCEED UNTIL AN APPROVED TRAFFIC CONTROL PLAN IS IN PLACE.

CONTACT THE PROJECT ENGINEER AND DESIGNER, GRECIA C. IZQUIERDO TORRES, AT GIZQUIERDO@CITYOFMADISON.COM FOR CAD FILES AND ALIGNMENT DATA PRIOR TO STAKING

CONTACT THE CITY CONSTRUCTION ENGINEER, KYLE FRANK, AT KFRANK@CITYOFMADISON.COM FOR PRECONSTRUCTION SCHEDULING, COORDINATION, AND INSPECTION

CONVENTIONAL SIGNS
FIELD VERIFY ALL UTILITY LOCATIONS

GAS	G
STORM SEWER	ST
SANITARY SEWER	SAN
WATER	W
BURIED ELECTRIC	E
OVERHEAD ELECTRIC	OH
POWER POLE	
ADA COMPLIANT RAMP W/ DETECTABLE WARNING FIELD	
COMBUSTIBLE FLUIDS	CAUTION

ALL PAVEMENT IN THE GOLDEN EAGLE DRIVE, RED PINE DRIVE, AND EMERALD ELM ROAD RIGHTS-OF-WAY SHALL BE TYPE A PAVEMENT PER STANDARD DETAIL DRAWING 4.02.

UNDERDRAINS SHALL BE INSTALLED PER STANDARD DETAIL DRAWING 4.05 FOR 75' ON EACH SIDE OF THE LOW POINT, OR TO THE NEAREST CURB HIGH POINT. ALL UNDERDRAIN SHALL BE WRAPPED.

ALL GUTTERS SHALL DRAIN WITH A MINIMUM GRADE OF 0.5% TOWARD STORM SEWER INLETS.

ALL DITCHES SHALL DRAIN WITH A MINIMUM GRADE OF 0.5%

THE CROSS SLOPE OF SIDEWALKS AND BARRIER FREE SIDEWALK CURB RAMPS SHALL TYPICALLY BE 1.5%. THE LONGITUDINAL GRADE OF BARRIER FREE SIDEWALK CURB RAMPS SHALL NOT EXCEED 8.33%. ALL SIDEWALK RAMPS SHALL BE CONSTRUCTED ACCORDING TO S.D.D. 3.04. AT ALL OTHER LOCATIONS THE LONGITUDINAL GRADE OF SIDEWALKS SHALL NOT EXCEED 5.0 % OR THE ADJACENT STREET GRADE WHICHEVER IS GREATER NOR BE LESS THAN 0.5% AND SHALL DRAIN TOWARD STORM SEWER INLETS. SIDE SLOPES WITHIN TEN FEET OF A PUBLIC SIDEWALK SHALL NOT EXCEED 4:1. ALL SIDEWALK AND SIDEWALK RAMP ELEVATIONS AND GRADES SHALL BE FIELD VERIFIED AND SET TO COMPLY WITH THE CITY OF MADISON STANDARD SPECIFICATIONS AND THE A.D.A. GUIDELINES.

CURB STATION AND OFFSETS SHALL BE TO THE EDGE OF PAVEMENT UNLESS OTHERWISE INDICATED. CURB ELEVATIONS SHALL BE TO THE EDGE OF PAVEMENT UNLESS OTHERWISE INDICATED.

POWER POLES AND OTHER OBSTRUCTIONS SHALL BE MOVED TO PROVIDE 2 FEET MINIMUM OF CLEAR DISTANCE FROM ANY FACE OF CURB OR EDGE OF SIDEWALK UNLESS OTHERWISE INDICATED ON THE PLANS.

ANY INFORMATION SHOWN ON THIS PLAN, WHICH IS NOT PART OF THIS RIGHT-OF-WAY PROJECT, IS PRELIMINARY AND NOT FOR CONSTRUCTION.

THERE MAY BE EXISTING UTILITIES OR OTHER FEATURES WHICH ARE EITHER NOT SHOWN OR SHOWN INCORRECTLY ON THIS PLAN. IT IS THE RESPONSIBILITY OF THE DEVELOPER TO LOCATE AND IDENTIFY ALL UTILITIES AND TOPOGRAPHY WHICH MAY AFFECT THE CONSTRUCTION OF THESE IMPROVEMENTS.

ALL PERMANENT SIGNING AND POSTING WILL BE DETERMINED AND PROVIDED BY THE TRAFFIC ENGINEERING DIVISION, FOLLOWING CONSTRUCTION OF THESE IMPROVEMENTS.

THE DEVELOPER SHALL PROVIDE, INSTALL AND MAINTAIN ALL STREET END BARRICADES, SIGNING AND TRAFFIC CONTROL, AS REQUIRED BY THE CITY TRAFFIC ENGINEER.

PAVEMENT SAWCUTS SHALL BE AS DIRECTED BY THE CITY CONSTRUCTION ENGINEER. SAWCUTS SHOWN ON THE PLAN ARE APPROXIMATE.

CURB ON CUL DE SACS SHALL BE INSTALLED ACCORDING TO S.D.D. 3.05.

ALL WORK IN THE RIGHT OF WAY AND PUBLIC EASEMENTS SHALL BE IN ACCORDANCE WITH THE CITY OF MADISON STANDARD SPECIFICATIONS FOR PUBLIC WORKS CONSTRUCTION LATEST EDITION.

ALL PROPOSED IMPROVEMENTS IN THE RIGHT-OF-WAY ARE BASED ON SURVEY DATA PROVIDED BY THE DEVELOPER OR ITS CONSULTANT. IN THE CASE THAT THE PROPOSED IMPROVEMENTS CAN NOT BE INSTALLED PER THESE PLANS OR THE CITY OF MADISON STANDARD SPECIFICATION FOR PUBLIC WORKS CONSTRUCTION, LATEST EDITION, THE DEVELOPER SHALL BE RESPONSIBLE FOR THE COST OF EXTRA WORK DUE TO INACCURACIES OF THE SURVEY.

ALL UTILITY VERIFICATIONS AND ACCURACY OF THE DRAWINGS ARE THE RESPONSIBILITY OF THE DEVELOPER. ANY CONFLICTS THAT ARISE FROM MISSING OR ERRONEOUS INFORMATION WILL BE AT THE EXPENSE OF THE DEVELOPER. NO PRECAST STRUCTURES WILL BE APPROVED FOR STORM OR SANITARY SEWER UNTIL ALL POTENTIAL UTILITY CONFLICTS ARE RESOLVED.

MARK	REVISION	DATE	BY
---	---	---	---
---	---	---	---
---	---	---	---
---	---	---	---

Designed By: ### Date: 7/27/2026 10:11 AM Scale: ########

14931

MADISON, WI

CONTRACT NO: 9386

STANDARD NOTES

WESTWIND - PHASE 2

M:\DESIGN\Projects\14931\CAD\Streets\14931EN-Details.dwg

14931

D-1

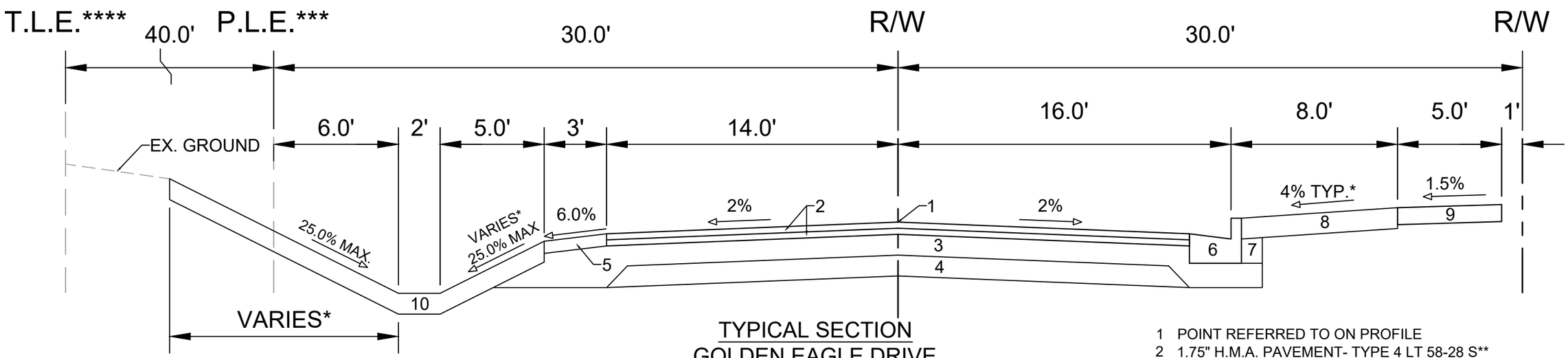

TYPICAL SECTION
GOLDEN EAGLE DRIVE
(EAST OF BLUE INDIGO ST)

SPECIAL NOTES:

* SEE SHEETS P-1 AND X-1 TO X-3 FOR CROSS SLOPES
** SEE SHEET O-1 FOR SURFACE PAVING RESPONSIBILITY
*** PERMANENT LIMITED EASEMENT FOR PUBLIC STREET PURPOSES PER DOC# 5849301
**** TEMPORARY LIMITED EASEMENT FOR GRADING AND STORM WATER DRAINAGE PER DOC# 5849304

1 POINT REFERRED TO ON PROFILE
2 1.75" H.M.A. PAVEMENT- TYPE 4 LT 58-28 S**
3 6.00" CRUSHED AGGREGATE BASE COURSE GRADATION 2
4 6.00" CRUSHED AGGREGATE BASE COURSE GRADATION 1
5 3.50" CRUSHED AGGREGATE BASE COURSE GRADATION 3
6 CONCRETE CURB AND GUTTER TYPE 'A'.
7 FILL
8 6" TOPSOIL, SEED AND MAT
9 5" CONCRETE SIDEWALK
10 6" TOPSOIL, SEED, & EROSION MAT CLASS II URBAN TYPE B

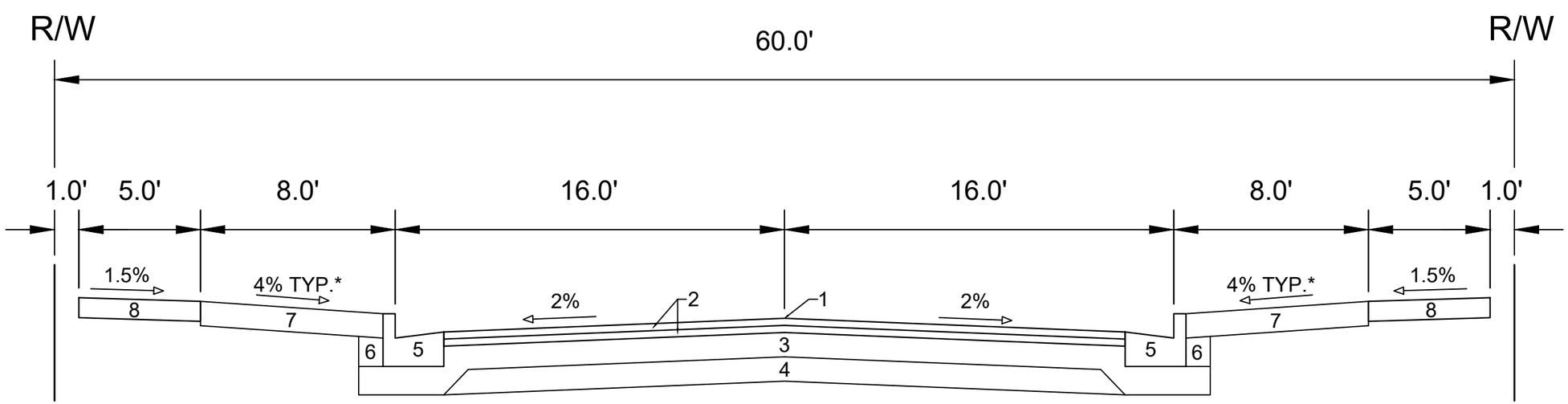

TYPICAL SECTION
GOLDEN EAGLE DRIVE
(WEST OF BLUE INDIGO ST)

SPECIAL NOTES:

* SEE SHEETS P-1 AND X-1 TO X-3 FOR CROSS SLOPES
** SEE SHEET O-1 FOR SURFACE PAVING RESPONSIBILITY

1 POINT REFERRED TO ON PROFILE
2 1.75" H.M.A. PAVEMENT- TYPE 4 LT 58-28 S**
3 6.0" CRUSHED AGGREGATE BASE COURSE GRADATION 2
4 6.0" CRUSHED AGGREGATE BASE COURSE GRADATION 1
5 CONCRETE CURB AND GUTTER TYPE 'A'.
6 FILL
7 6.0" TOPSOIL, SEED AND MAT
8 5.0" CONCRETE SIDEWALK

MARK	REVISION	DATE	BY
---	---	---	---
---	---	---	---
---	---	---	---
---	---	---	---

Designed By: #### Date: 7/27/2026 10:12 AM Scale: ########

14931

D-2

14931

MADISON, WI

CONTRACT NO: 9386

TYPICAL SECTIONS

WESTWIND - PHASE 2

M:\DESIGN\Projects\14931\CAD\Streets\14931EN-Details.dwg

14931

D-2

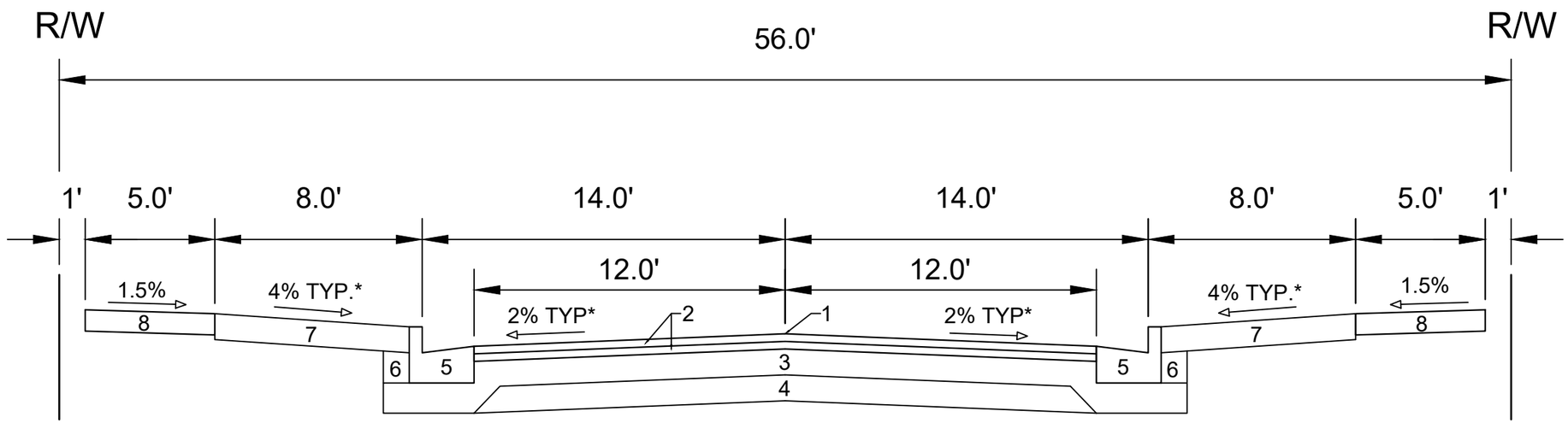

TYPICAL SECTION
EMERALD ELM ROAD

SPECIAL NOTES:

* SEE SHEETS P-3 TO P-4 AND X-8 TO X-11 FOR CROSS SLOPES
** SEE SHEET O-1 FOR SURFACE PAVING RESPONSIBILITY

1 POINT REFERRED TO ON PROFILE
2 1.75" H.M.A. PAVEMENT- TYPE 4 LT 58-28 S**
3 6.0" CRUSHED AGGREGATE BASE COURSE GRADATION 2
4 6.0" CRUSHED AGGREGATE BASE COURSE GRADATION 1
5 CONCRETE CURB AND GUTTER TYPE 'A'.
6 FILL
7 6.0" TOPSOIL, SEED AND MATTING
8 5.0" CONCRETE SIDEWALK

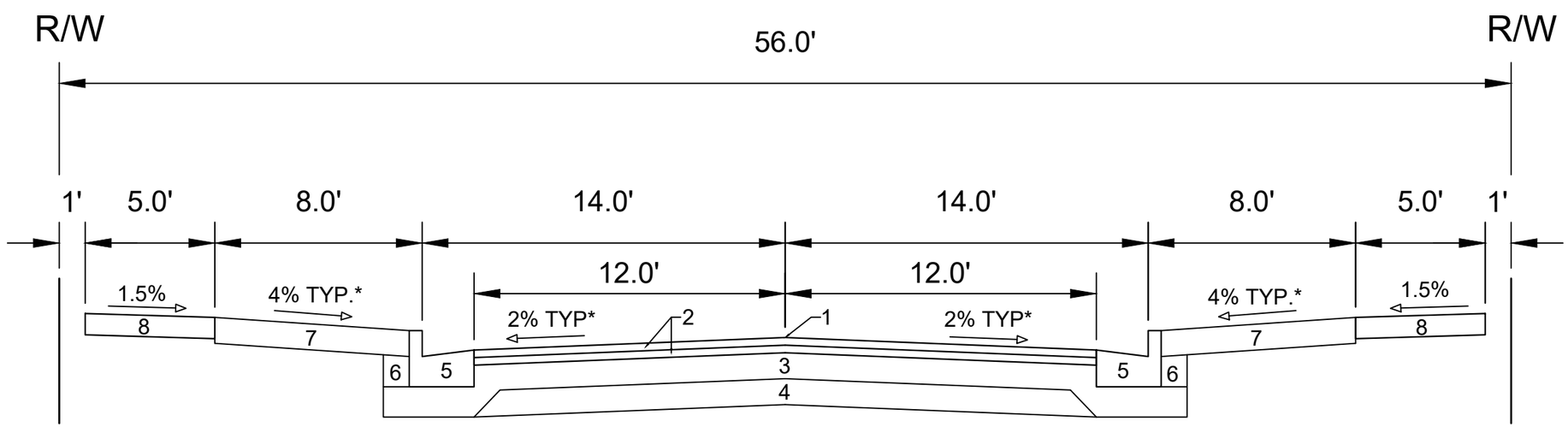

TYPICAL SECTION
RED PINE DRIVE

SPECIAL NOTES:

* SEE SHEETS P-2 AND X-4 TO X-7 FOR CROSS SLOPES
** SEE SHEET O-1 FOR SURFACE PAVING RESPONSIBILITY

1 POINT REFERRED TO ON PROFILE
2 1.75" H.M.A. PAVEMENT- TYPE 4 LT 58-28 S**
3 6.0" CRUSHED AGGREGATE BASE COURSE GRADATION 2
4 6.0" CRUSHED AGGREGATE BASE COURSE GRADATION 1
5 CONCRETE CURB AND GUTTER TYPE 'A'.
6 FILL
7 6.0" TOPSOIL, SEED AND MATTING
8 5.0" CONCRETE SIDEWALK

MARK	REVISION	DATE	BY
---	---	---	---
---	---	---	---
---	---	---	---
---	---	---	---

Designed By: #### Date: 7/27/2026 10:12 AM Scale: ########

14931 D-3

14931

MADISON, WI

CONTRACT NO: 9386

TYPICAL SECTIONS

WESTWIND - PHASE 2

M:\DESIGN\Projects\14931\CAD\Streets\14931EN-Details.dwg

14931

D-3

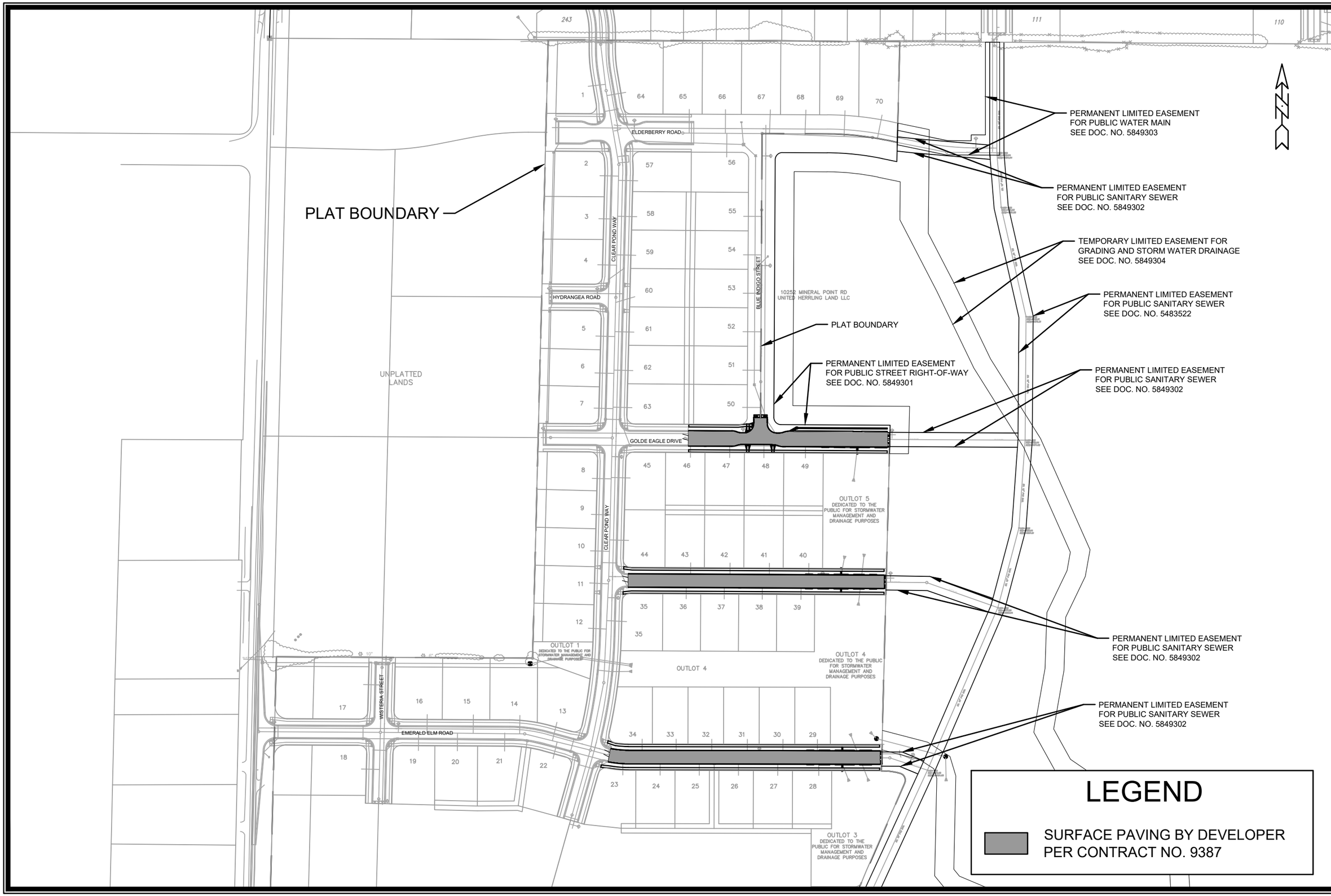

MARK	REVISION	DATE	BY
---	---	---	---
---	---	---	---
---	---	---	---
---	---	---	---

Designed By: #### Date: 7/16/2026 2:22 PM Scale: ##########

14931

O-1

14931

MADISON, WI

CONTRACT NO: 9386

OVERVIEW PLAN

WESTWIND - PHASE 2

M:\DESIGN\Projects\14931\CAD\Streets\14931EN-OverviewPlan.dwg

CITY OF MADISON WISCONSIN

14931

O-1

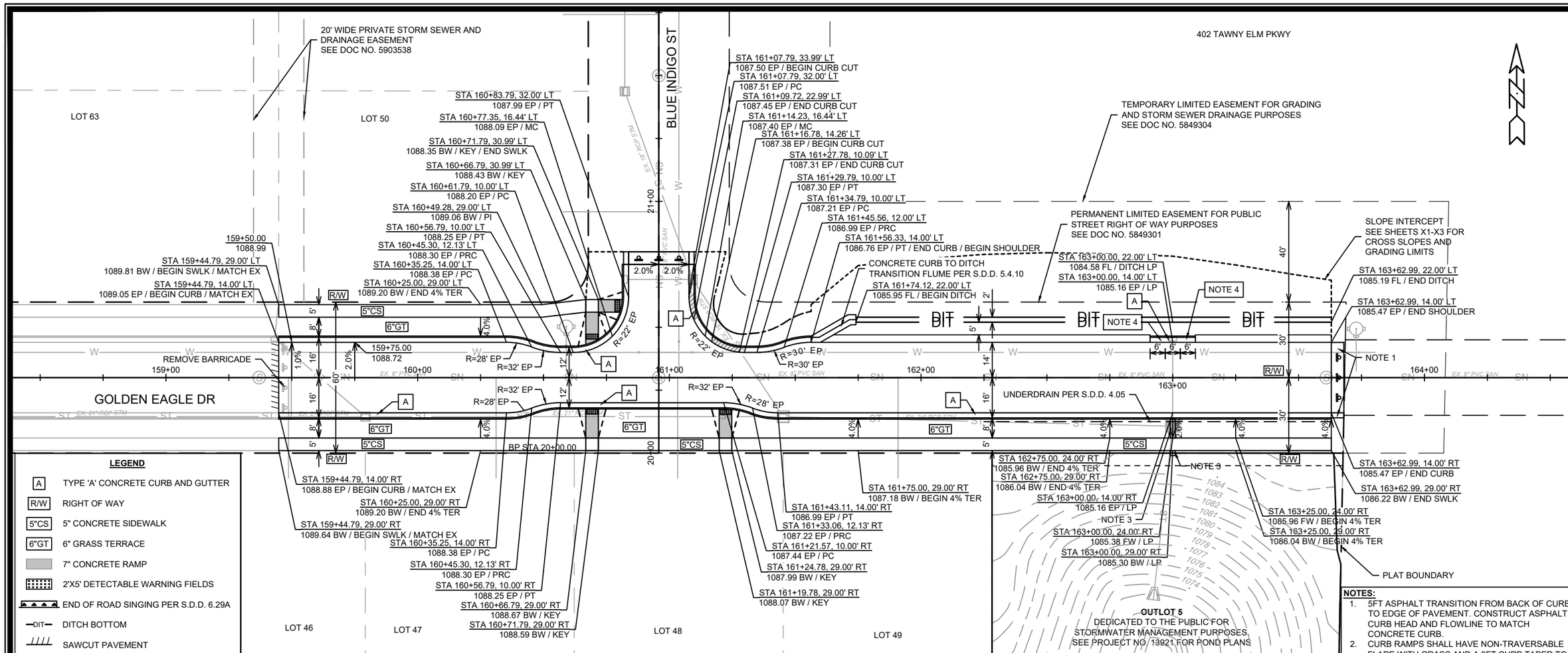

NOTES:

1. 5FT ASPHALT TRANSITION FROM BACK OF CURB TO EDGE OF PAVEMENT. CONSTRUCT ASPHALT CURB HEAD AND FLOWLINE TO MATCH CONCRETE CURB.
2. CURB RAMPS SHALL HAVE NON-TRAVERSABLE FLARE WITH GRASS AND A 3FT CURB TAPER TO FULL CURB HEAD. INSTALL A 2-INCH CONCRETE BORDER ALONG ALL SIDES OF DETECTABLE WARNING FIELDS
3. 5" CONCRETE TERRACE - 2FT WIDE
4. CURB & GUTTER END SECTION

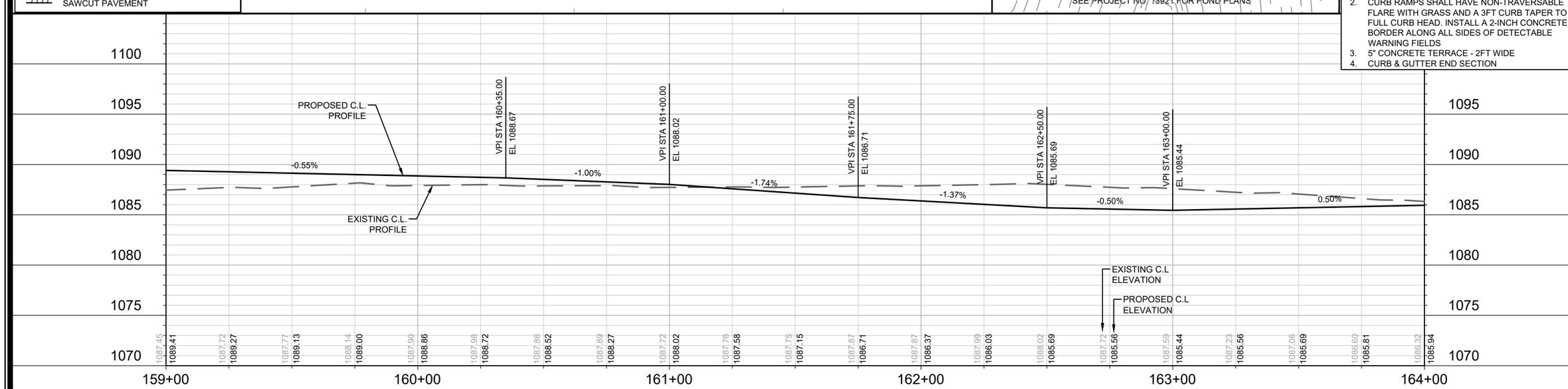

MARK	REVISION	DATE	BY
---	---	---	---

Designed By: GGIT | Date: 8/4/2026 8:57 AM | Scale: 1" = 40'

14931

P-1

14931

MADISON, WI

CONTRACT NO: 9386

PLAN & PROFILE - GOLDEN EAGLE DRIVE

WESTWIND - PHASE 2

M:\DESIGN\Projects\14931\CAD\Streets\14931EN-PnP.dwg

CITY OF MADISON WISCONSIN

14931

P-1

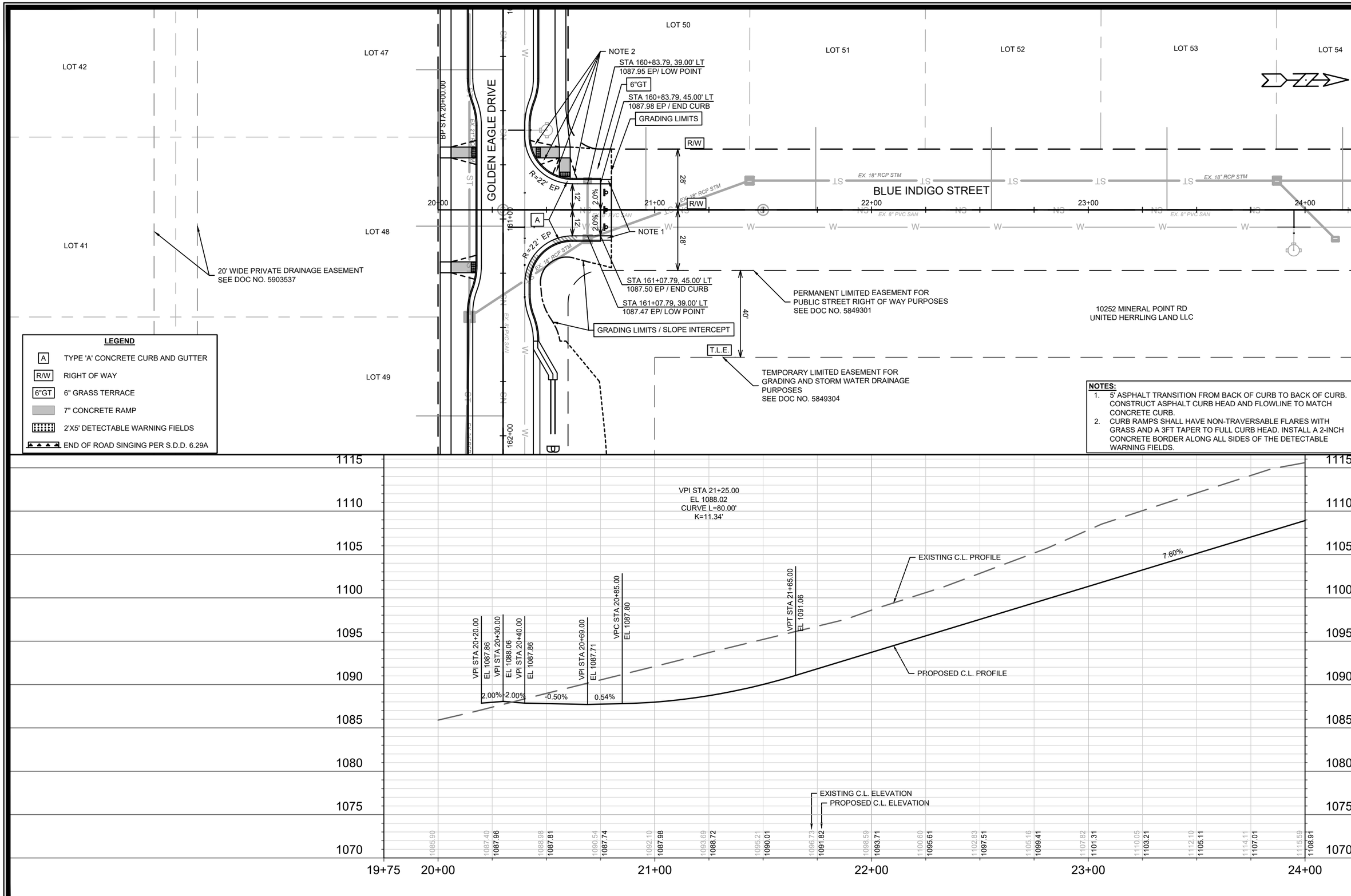

MARK	REVISION	DATE	BY
---	---	---	---
---	---	---	---
---	---	---	---
---	---	---	---

Designed By: GCIT | Date: 8/4/2026 8:58 AM | Scale: 1" = 40'

14931 | P-2

14931

MADISON, WI

CONTRACT NO: 9386

PLAN & PROFILE - BLUE INDIGO STREET

WESTWIND - PHASE 2

M:\DESIGN\Projects\14931\CAD\Streets\14931EN-PnP.dwg

CITY OF MADISON WISCONSIN

14931

P-2

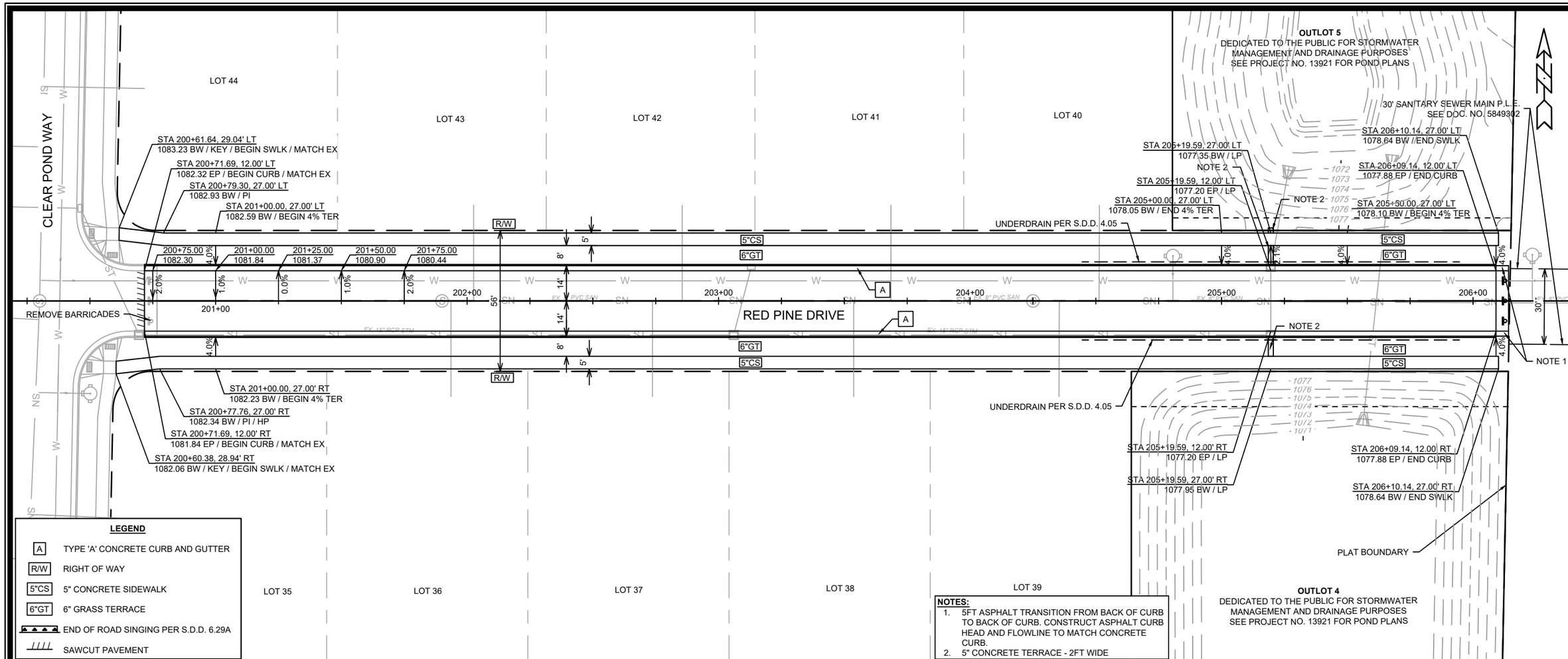

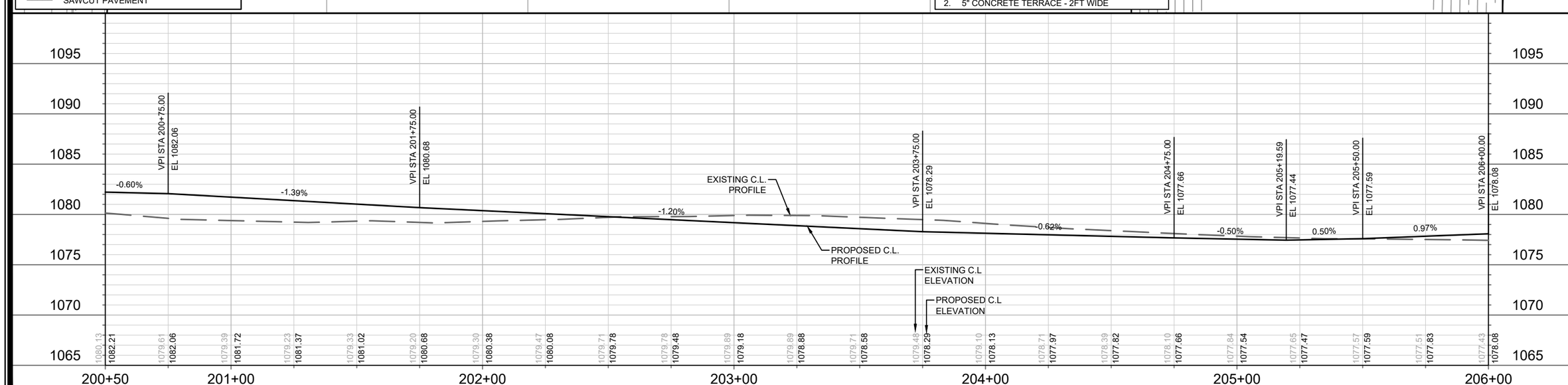

MARK	REVISION	DATE	BY
---	---	---	---
---	---	---	---
---	---	---	---
---	---	---	---
---	---	---	---

Designed By: GGIT | Date: 8/4/2026 8:58 AM | Scale: 1" = 40'

14931

P-3

14931

MADISON, WI

CONTRACT NO: 9386

PLAN & PROFILE - RED PINE DRIVE

WESTWIND - PHASE 2

M:\DESIGN\Projects\14931\CAD\Streets\14931EN-PnP.dwg

CITY OF MADISON WISCONSIN

14931

P-3

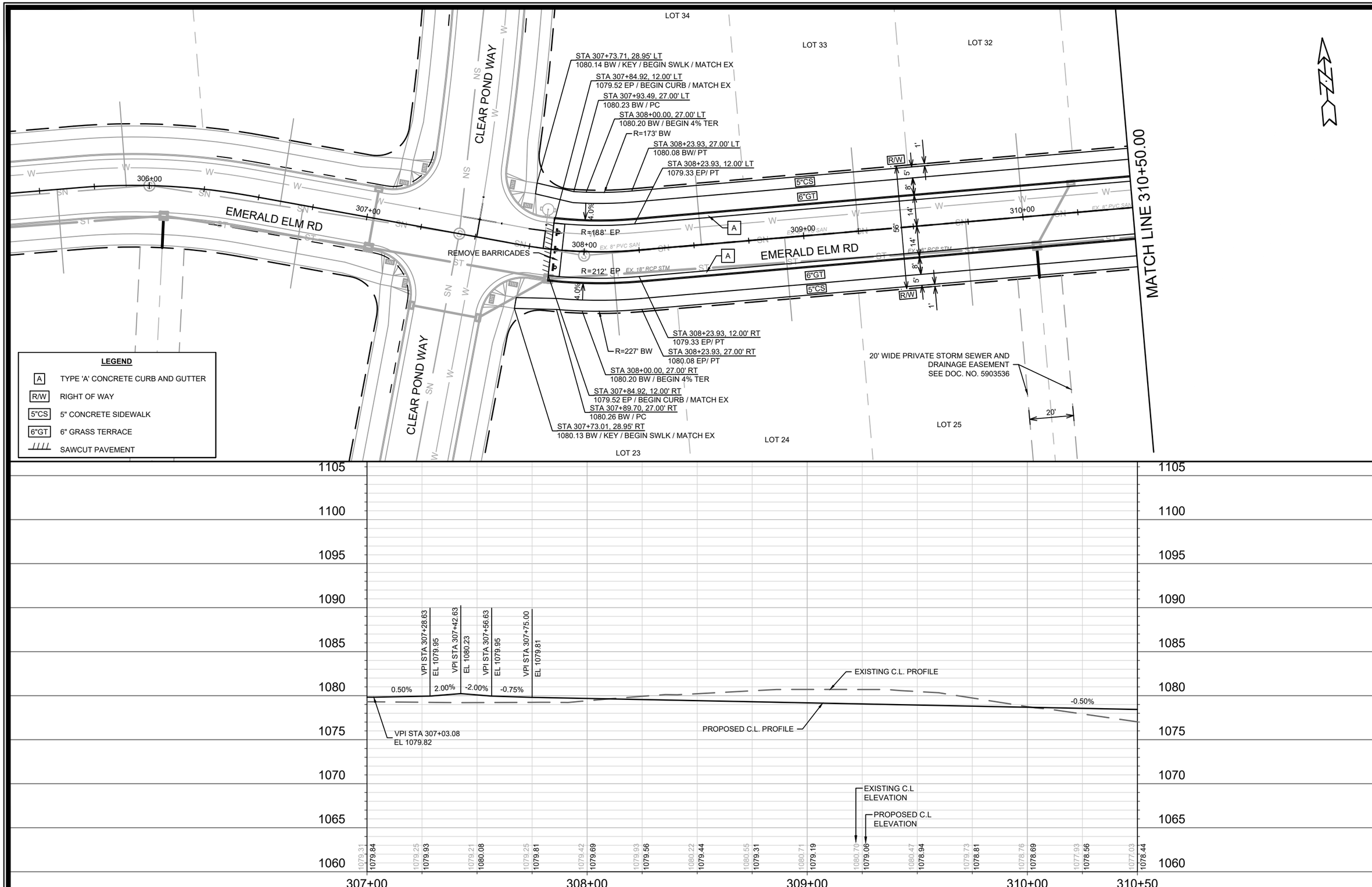

MARK	REVISION	DATE	BY
---	---	---	---
---	---	---	---
---	---	---	---
---	---	---	---
---	---	---	---
---	---	---	---

Designed By: GCIT | Date: 8/4/2026 8:58 AM | Scale: 1" = 40'

14931

P-4

14931

MADISON, WI

CONTRACT NO: 9386

PLAN & PROFILE - EMERALD ELM ROAD

WESTWIND - PHASE 2

M:\DESIGN\Projects\14931\CAD\Streets\14931EN-PnP.dwg

CITY OF MADISON WISCONSIN

14931

P-4

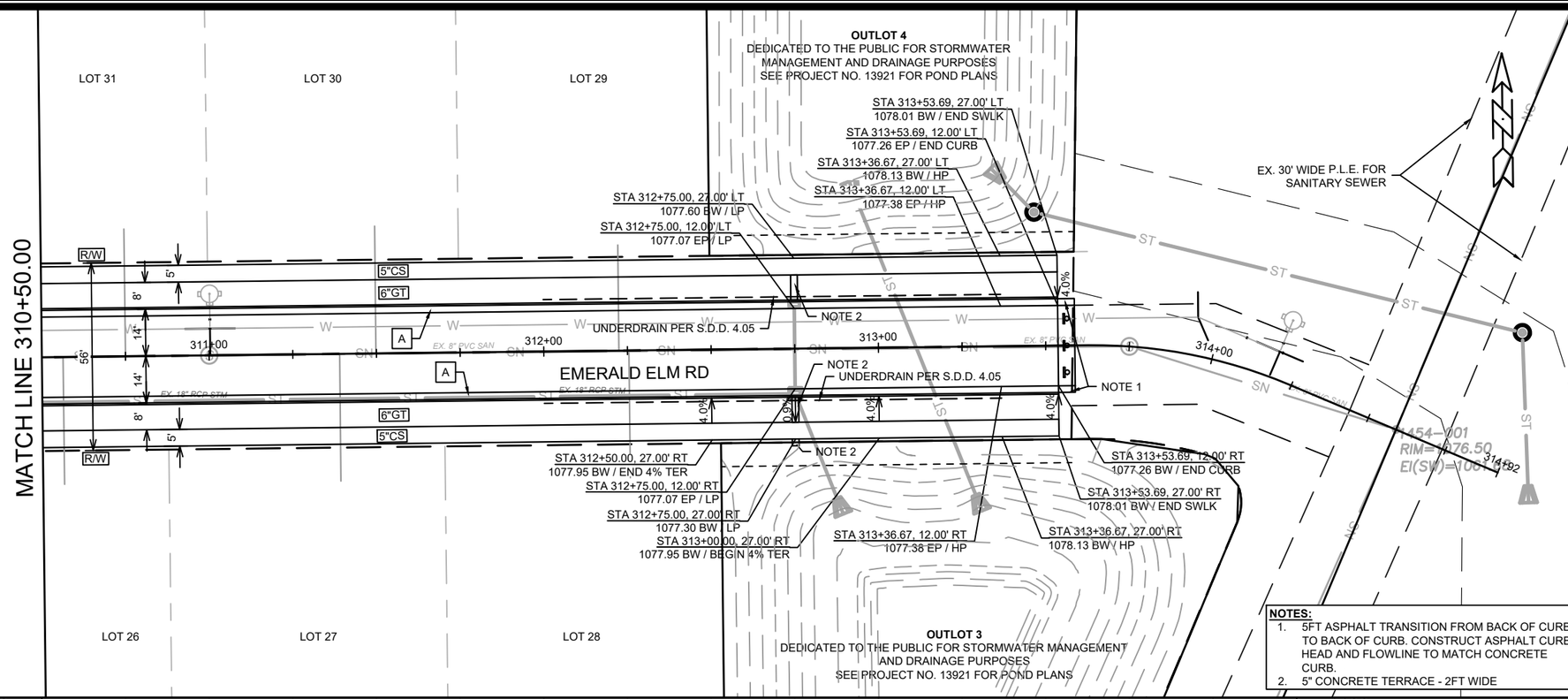

LEGEND

A	TYPE 'A' CONCRETE CURB AND GUTTER
R/W	RIGHT OF WAY
5"CS	5" CONCRETE SIDEWALK
6"GT	6" GRASS TERRACE
	END OF ROAD SINGING PER S.D.D. 6.29A

NOTES:

1. 5FT ASPHALT TRANSITION FROM BACK OF CURB TO BACK OF CURB. CONSTRUCT ASPHALT CURB HEAD AND FLOWLINE TO MATCH CONCRETE CURB.
2. 5" CONCRETE TERRACE - 2FT WIDE

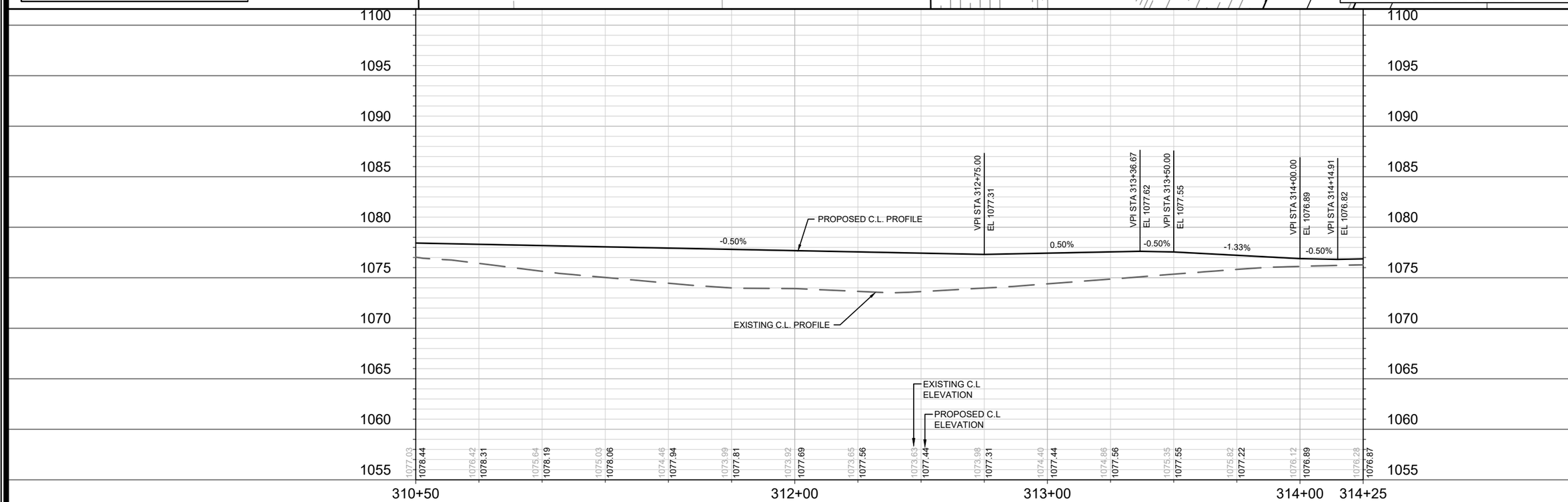

MARK	REVISION	DATE	BY
---	---	---	---
---	---	---	---
---	---	---	---
---	---	---	---

Designed By: GGIT | Date: 8/4/2026 8:58 AM | Scale: 1" = 40'

P-5

14931

MADISON, WI

CONTRACT NO: 9386

PLAN & PROFILE - EMERALD ELM ROAD

WESTWIND - PHASE 2

M:\DESIGN\Projects\14931\CAD\Streets\14931EN-PnP.dwg

14931

P-5

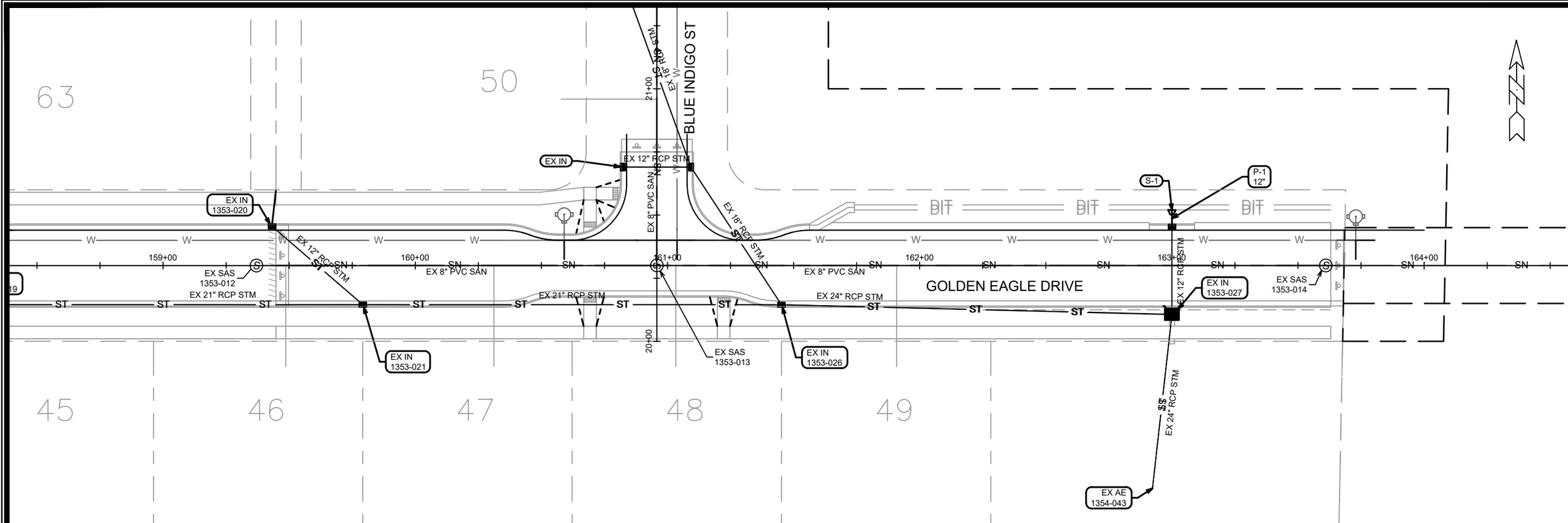

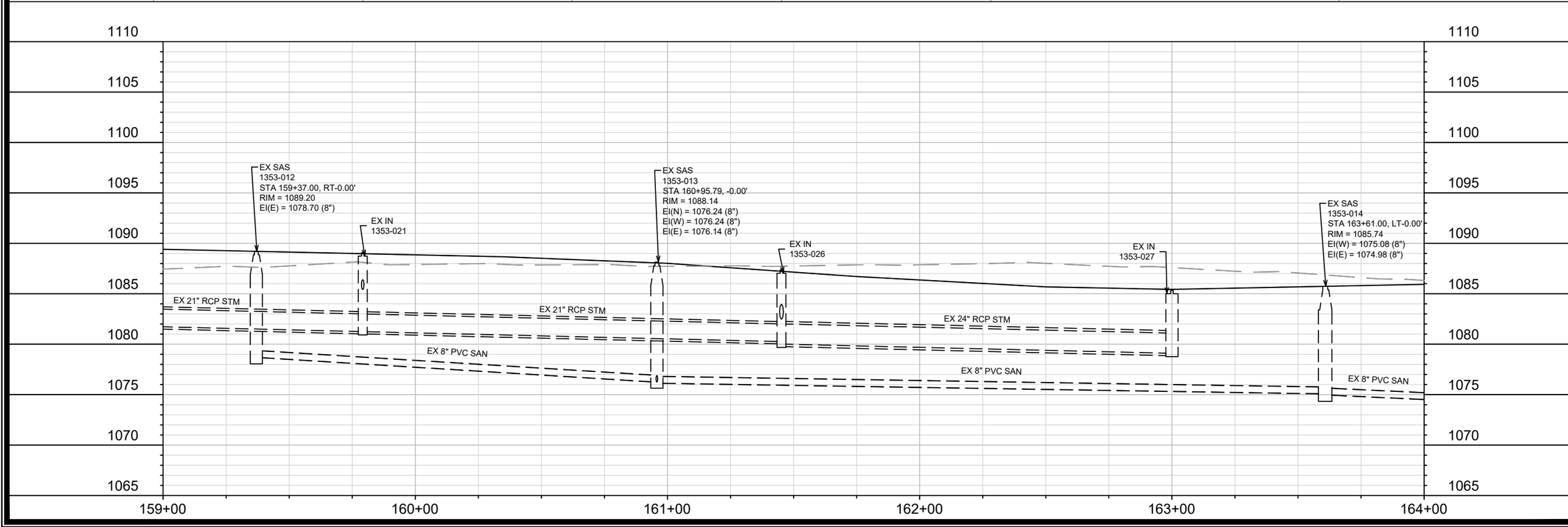

MARK	REVISION	DATE	BY
---	---	---	---
---	---	---	---
---	---	---	---
---	---	---	---
---	---	---	---
---	---	---	---

Designed By: #### Date: 7/16/2026 2:46 PM Scale: 1" = 40'

14931

U-1

14931

MADISON, WI

CONTRACT NO: 9386

UTILITIES PLAN & PROFILE - BLUE INDIGO STREET

WESTWIND - PHASE 2

M:\DESIGN\Projects\14931\CAD\Sewers\14931SWR-PipeNetwork.dwg

CITY OF MADISON WISCONSIN

14931

U-1

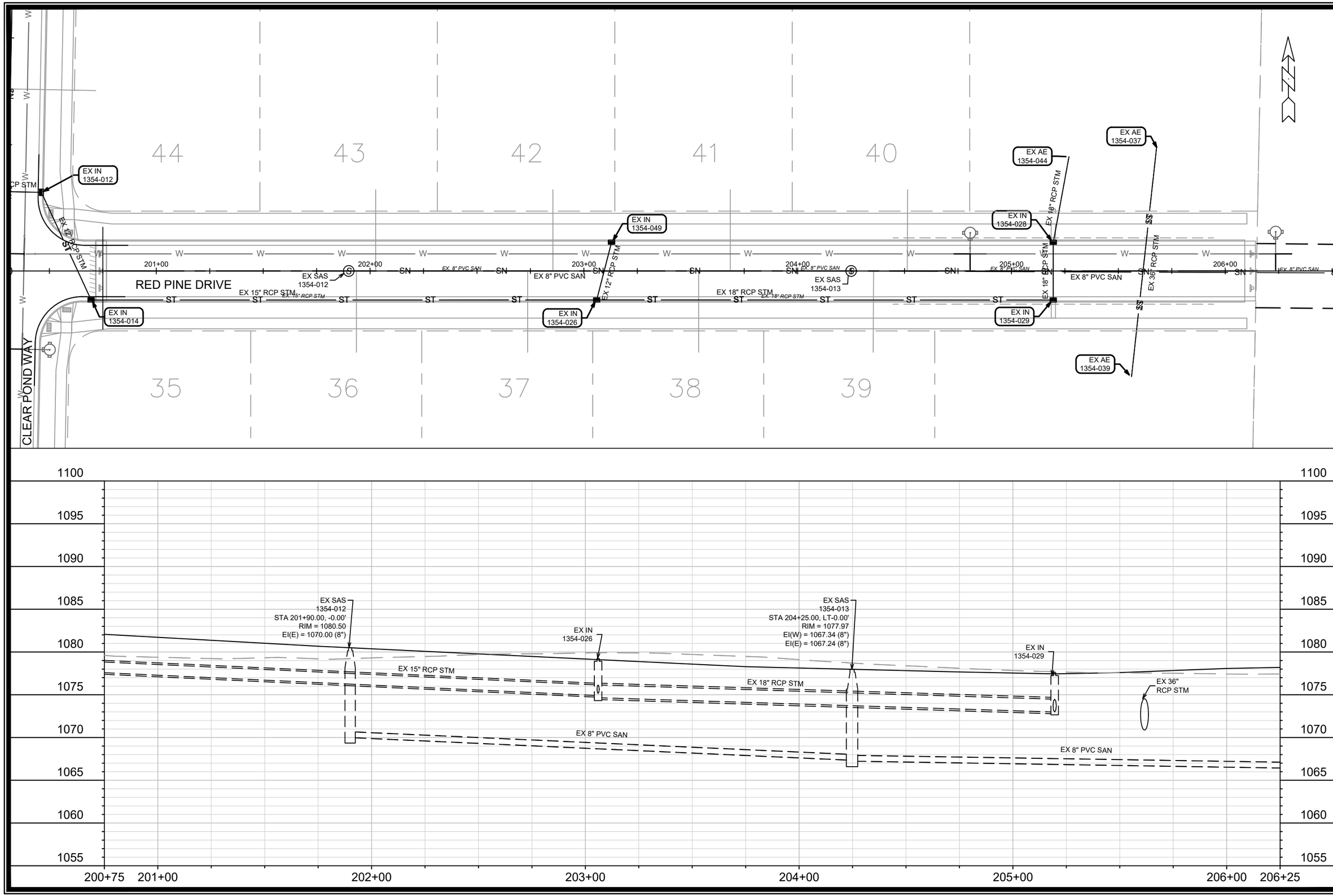

MARK	REVISION	DATE	BY
---	---	---	---
---	---	---	---
---	---	---	---
---	---	---	---
---	---	---	---

Designed By: #### Date: 7/16/2026 2:24 PM Scale: 1" = 40'

14931

MADISON, WI

CONTRACT NO: 9386

UTILITIES PLAN & PROFILE - GOLDEN EAGLE DRIVE

WESTWIND - PHASE 2

M:\DESIGN\Projects\14931\CAD\Sewers\14931SWR-PipeNetwork.dwg

14931

U-2

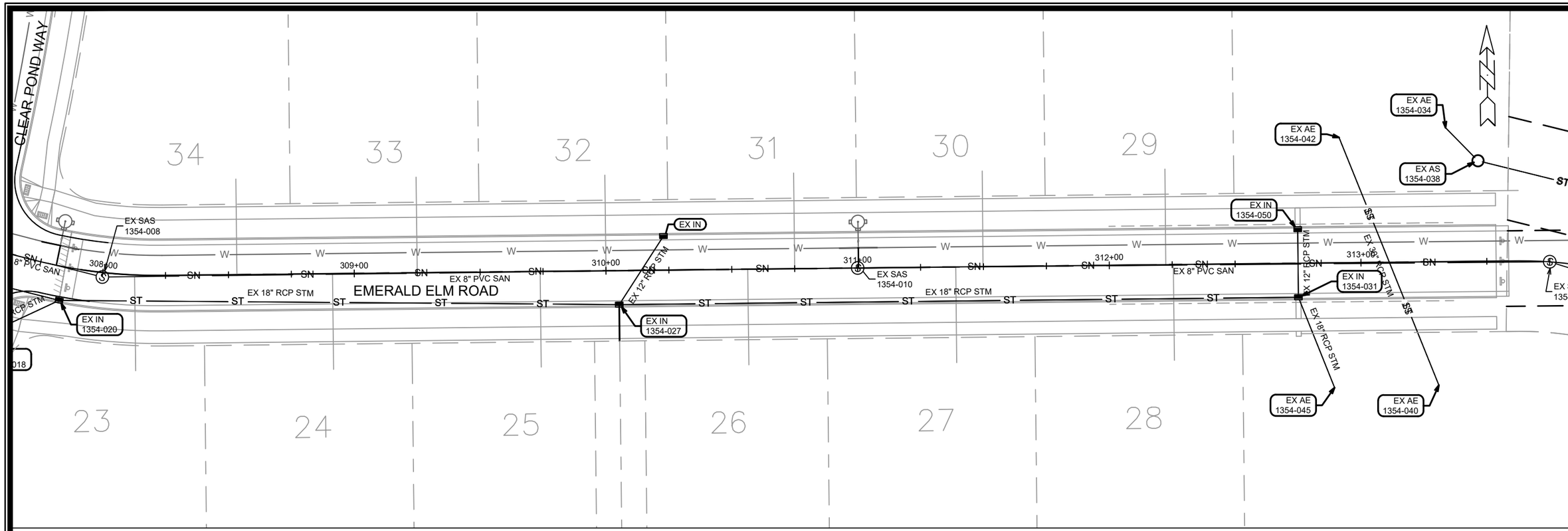

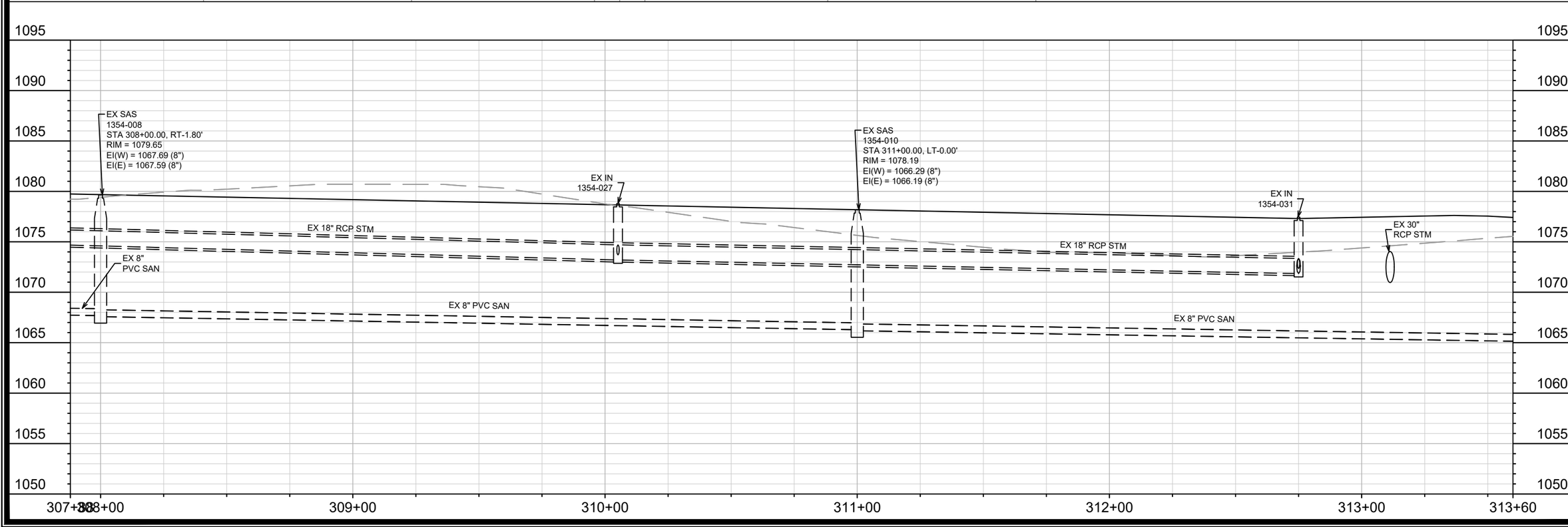

MARK	REVISION	DATE	BY
---	---	---	---
---	---	---	---
---	---	---	---
---	---	---	---

Designed By: #### Date: 7/16/2026 2:42 PM Scale: 1" = 40'

14931 U-3

14931

MADISON, WI

9386

CONTRACT NO:

UTILITIES PLAN & PROFILE - EMERALD ELM ROAD

WESTWIND - PHASE 2

M:\DESIGN\Projects\14931\CAD\Sewers\14931SWR-PipeNetwork.dwg

CITY OF MADISON WISCONSIN

14931

U-3

STORM SEWER SCHEDULE

WESTWIND PHASE 2	SHEET NO.
PROJECT NO. 14931	U-STM
STORM SEWER SCHEDULE	
	CITY OF MADISON

PROPOSED STORM STRUCTURES

STRUC. NO.	STATION	LOCATION (OFFSET)	TYPE	TOP OF CASTING	E.I.	DEPTH	NOTES
GOLDEN EAGLE DRIVE							
S-1	163+00.00	LT-22.00	12" RCP APRON END	-	1083.50	-	W/ GATE

PROPOSED STORM PIPES

PIPE NO.	FROM (DNSTM)	TO (UPSTM)	DISCH. E.I.	INLET E.I.	PLAN (PAY) LGTH (FT)	PIPE LGTH (FT)	SLOPE (%)	PIPE SIZE	TYPE	NOTES
GOLDEN EAGLE DRIVE										
P-1	1353-030	S-1	1081.74	1083.50	7	6	29.33%	12"	TYPE II	(1)

SPECIFIC NOTES:

(1) TAP EXISTING INLET

STANDARD NOTES:

-PLAN LENGTH (PAY LENGTH) IS FROM CENTER OF STRUCTURE TO CENTER OF STRUCTURE. PIPE LENGTH IS ACTUAL LENGTH OF PIPE FROM STRUCTURE WALL TO STRUCTURE WALL. SLOPE CALCULATED USING PIPE LENGTH.

- ABBREVIATIONS: AE = APRON ENDWALL; RCP = REINFORCED CONCRETE PIPE; HERCP = HORIZONTAL ELLIPTICAL REINFORCED CONCRETE PIPE; DNA = DOES NOT APPLY; SAS = SEWER ACCESS STRUCTURE; LP = LOW POINT INLET STRUCTURE; FP = FIELD POURED STRUCTURE; TR = TOP OF CONCRETE ROOF; NCM = NO CROWN MATCH FOR PIPES; UD = UNDERDRAIN
- APPROXIMATE DISCHARGE E.I. GIVEN, ADJUST E.I. AND PIPE SLOPE IN THE FIELD.
- TOP OF CASTING GRADE GIVEN IS THE TOP OF CURB FOR INLET STRUCTURES AND THE FLOWLINE OF THE CLOSED CASTING FOR SAS's.
- ALL REINFORCED CONCRETE PIPES TO BE CLASS III UNLESS OTHERWISE NOTED.
- SURVEYOR TO CONFIRM THAT ALL INLET STATION / OFFSETS LINE UP WITH PROPOSED CURB AND GUTTER.

-ALL FIELD POURED SAS STORM STRUCTURES SHALL BE CONSTRUCTED IN ACCORDANCE WITH STANDARD DETAIL DRAWING 5.7.3. ALL PRECAST SAS STORM STRUCTURES SHALL BE CONSTRUCTED IN ACCORDANCE WITH STANDARD DETAIL DRAWING 5.7.5.

- ALL STRUCTURES CALLED OUT AS FIELD POURED SHALL BE FIELD POURED. ALL OTHER STRUCTURES (NOT INDICATED AS FIELD POURED) SHALL BE SUBMITTED TO CITY ENGINEERING FOR APPROVAL IF PRECAST STRUCTURES ARE PREFERRED. CONTACT ELIA E ACOSTA OF CITY ENGINEERING AT (608) 266-4096 FOR STORM SEWER PRECAST APPROVALS, FAX SHOP DRAWINGS TO (608)264-9275, OR EMAIL SHOP DRAWINGS TO EACOSTA@CITYOFMADISON.COM.

-FOR SWM PRECAST APPROVALS CONTACT PHIL GAEBLER AT (608) 266-4059 OR EMAIL SWM SHOP DRAWINGS TO PGAEBLER@CITYOFMADISON.COM

REVISION 1 - GCIT - 08/27/2026
- UPDATED TREE PLANTING SITES LAYOUT

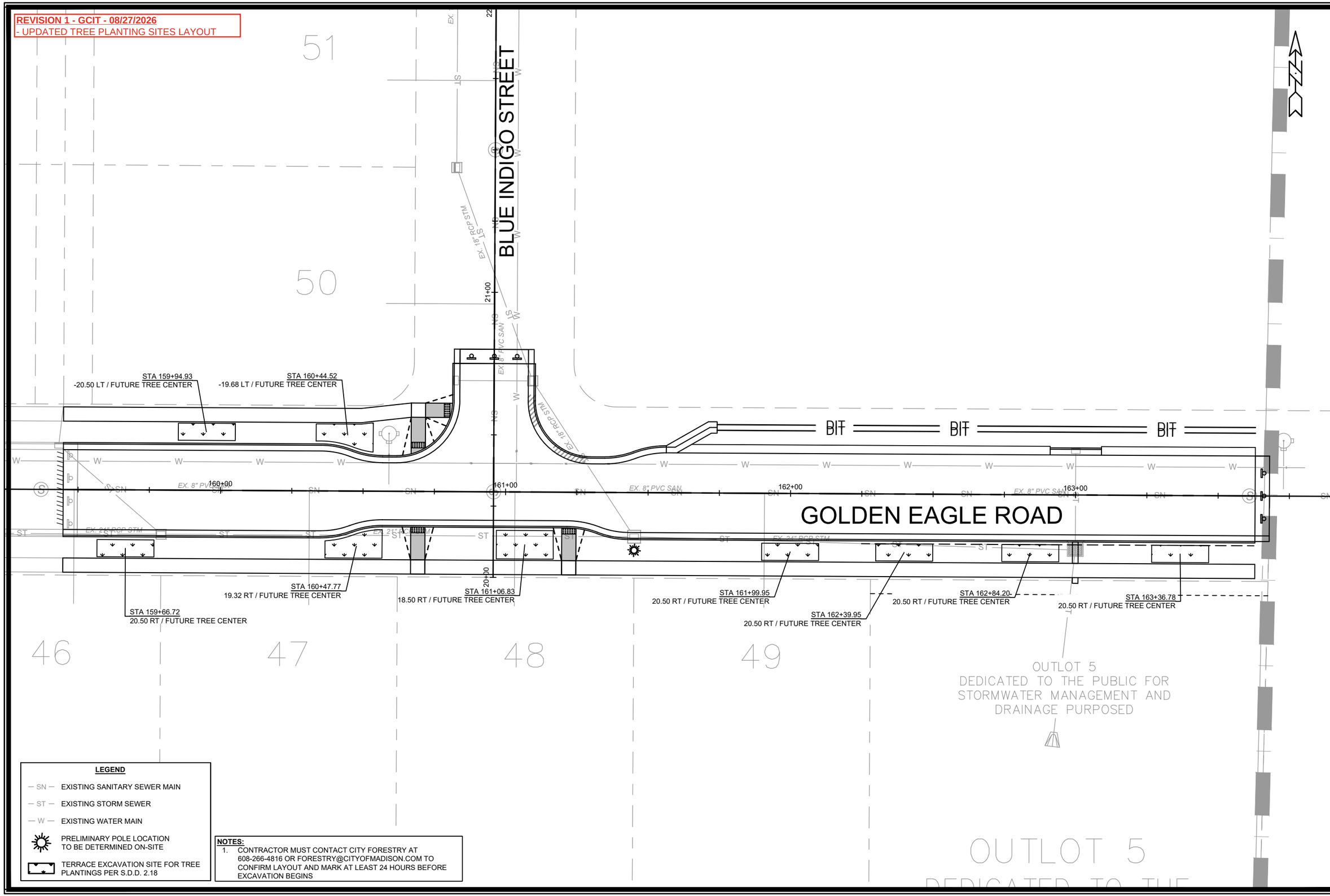

LEGEND

- SN — EXISTING SANITARY SEWER MAIN
- ST — EXISTING STORM SEWER
- W — EXISTING WATER MAIN
- PRELIMINARY POLE LOCATION TO BE DETERMINED ON-SITE
- TERRACE EXCAVATION SITE FOR TREE PLANTINGS PER S.D.D. 2.18

NOTES:

1. CONTRACTOR MUST CONTACT CITY FORESTRY AT 608-266-4816 OR FORESTRY@CITYOFMADISON.COM TO CONFIRM LAYOUT AND MARK AT LEAST 24 HOURS BEFORE EXCAVATION BEGINS

MARK	REVISION	DATE	BY
REV1	UPDATED PLANTING SITES LAYOUT	08/27/26	GIT

Designed By: GCIT | Date: 8/27/2026 9:13 AM | Scale: ######

14931 | L-1

14931

MADISON, WI

CONTRACT NO: 9386

LANDSCAPING PLAN - GOLDEN EAGLE DRIVE

WESTWIND - PHASE 2

M:\DESIGN\Projects\14931\CAD\Streets\14931EN-LandscapingPlan.dwg

14931

L-1

REVISION 1 - GCIT - 08/27/2026
- UPDATED TREE PLANTING SITES LAYOUT

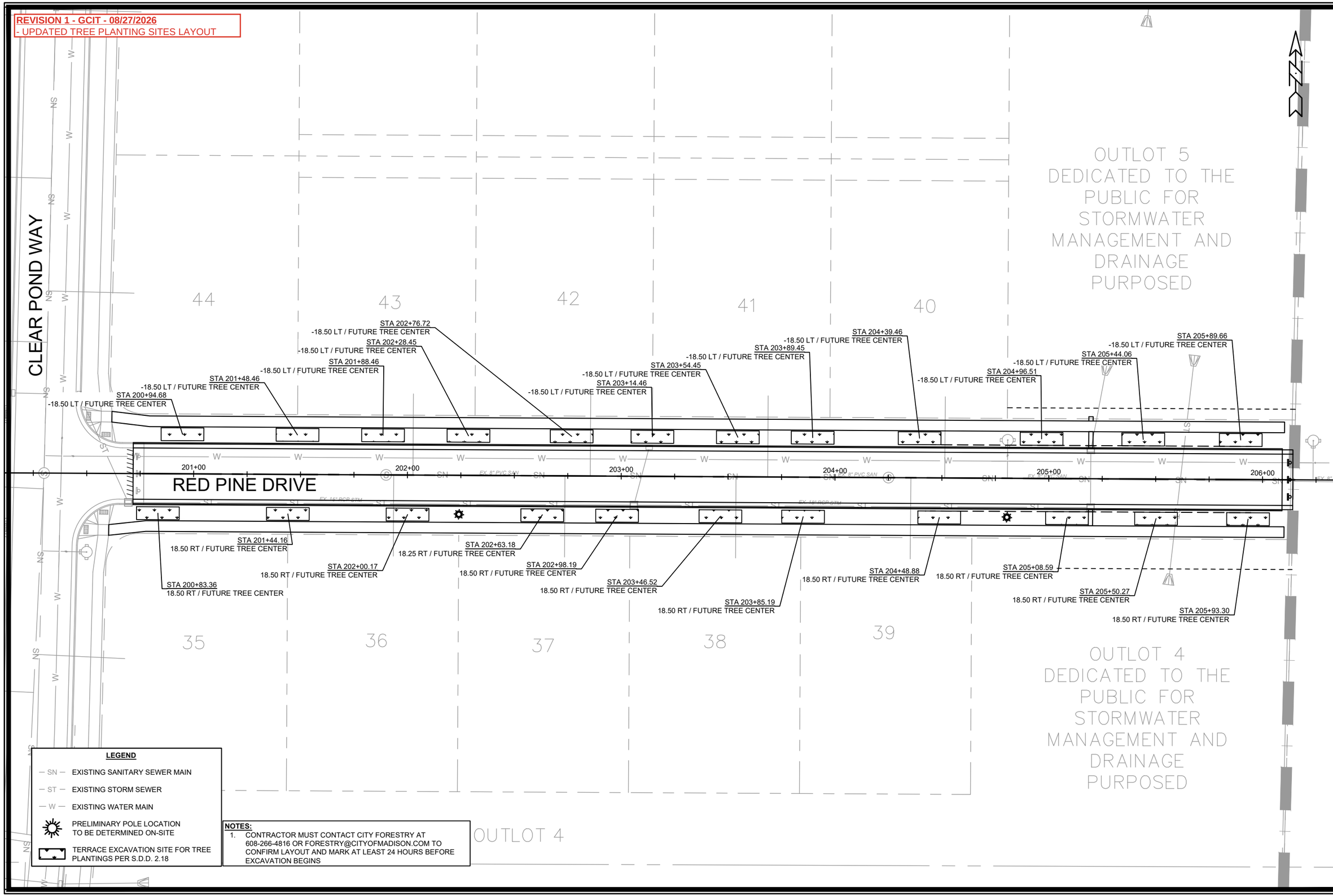

MARK	REVISION	DATE	BY
REV1	UPDATED PLANTING SITES LAYOUT	08/27/26	GIT

Designed By: ### Date: 8/27/2026 9:13 AM Scale: ######

14931

L-2

14931

MADISON, WI

CONTRACT NO: 9386

LANDSCAPING PLAN - RED PINE DRIVE

WESTWIND - PHASE 2

M:\DESIGN\Projects\14931\CAD\Streets\14931EN-LandscapingPlan.dwg

CITY OF MADISON WISCONSIN

14931

L-2

REVISION 1 - GCIT - 08/27/2026
- UPDATED TREE PLANTING SITES LAYOUT

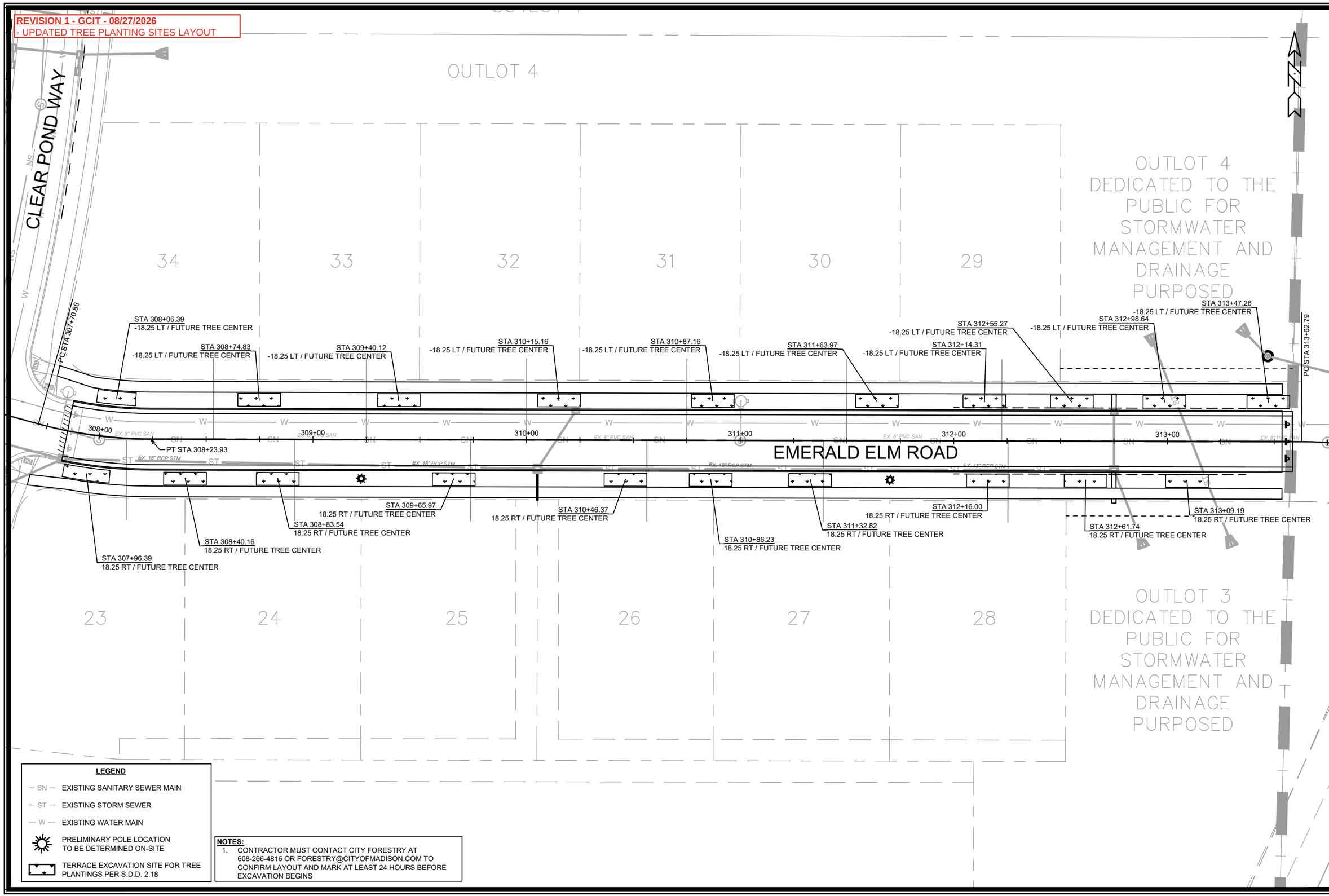

LEGEND

- SN — EXISTING SANITARY SEWER MAIN
- ST — EXISTING STORM SEWER
- W — EXISTING WATER MAIN
- PRELIMINARY POLE LOCATION TO BE DETERMINED ON-SITE
- TERRACE EXCAVATION SITE FOR TREE PLANTINGS PER S.D.D. 2.18

NOTES:

1. CONTRACTOR MUST CONTACT CITY FORESTRY AT 608-266-4816 OR FORESTRY@CITYOFMADISON.COM TO CONFIRM LAYOUT AND MARK AT LEAST 24 HOURS BEFORE EXCAVATION BEGINS

MARK	REVISION	DATE	BY
REV1	UPDATED PLANTING SITES LAYOUT	08/27/26	GIT

Designed By: ### Date: 8/27/2026 9:13 AM Scale: ######

14931

MADISON, WI

CONTRACT NO: 9386

LANDSCAPING PLAN - EMERALD ELM ROAD

WESTWIND - PHASE 2

M:\DESIGN\Projects\14931\CAD\Streets\14931EN-LandscapingPlan.dwg

14931

L-3

160+00.00

160+75.00

159+75.00

160+50.00

159+50.00

160+25.00

MARK	REVISION	DATE	BY
---	---	---	---
---	---	---	---
---	---	---	---
---	---	---	---

Designed By: GCIT Date: 7/27/2026 10:09 AM Scale: 1" = 20'

14931

X-1

14931

MADISON, WI

CONTRACT NO: 9386

CROSS SECTIONS - GOLDEN EAGLE DRIVE

WESTWIND - PHASE 2

M:\DESIGN\Projects\14931\CAD\Streets\14931EN-Xsections.dwg

CITY OF MADISON WISCONSIN

14931

X-1

161+50.00

162+25.00

161+25.00

162+00.00

161+00.00

161+75.00

MARK	REVISION	DATE	BY
---	---	---	---
---	---	---	---
---	---	---	---
---	---	---	---
---	---	---	---

Designed By: GCIT Date: 7/27/2026 10:09 AM Scale: 1" = 20'

14931

MADISON, WI

CONTRACT NO: 9386

CROSS SECTIONS - GOLDEN EAGLE DRIVE

WESTWIND - PHASE 2

M:\DESIGN\Projects\14931\CAD\Streets\14931EN-Xsections.dwg

14931

X-2

X-2

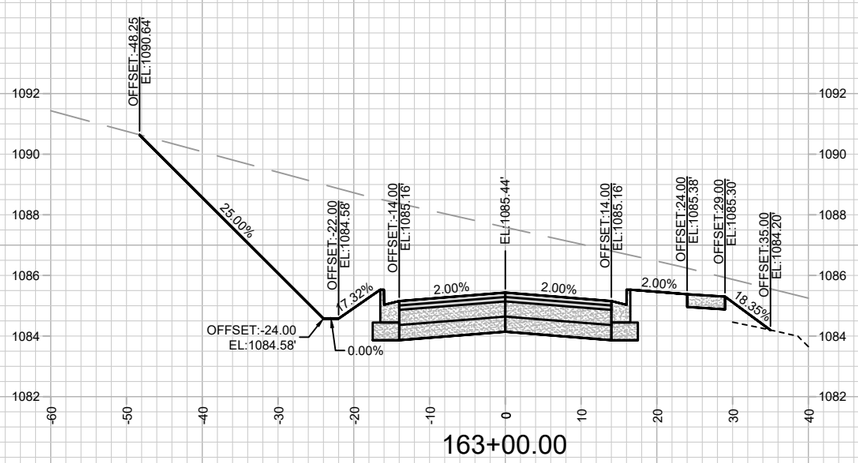

163+00.00

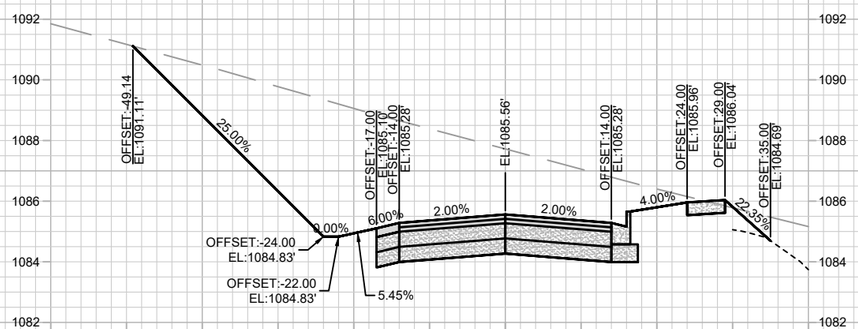

162+75.00

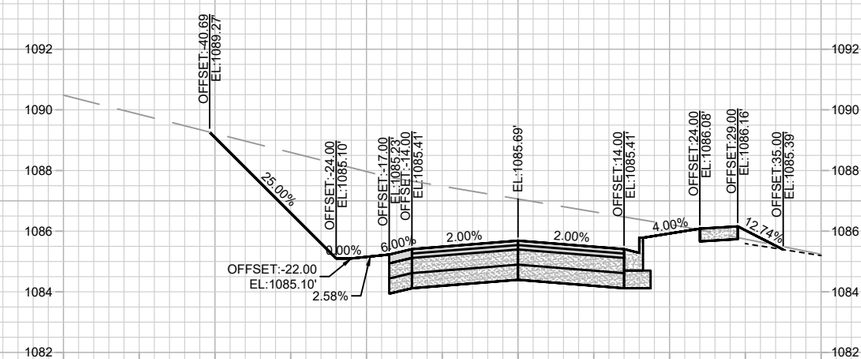

163+50.00

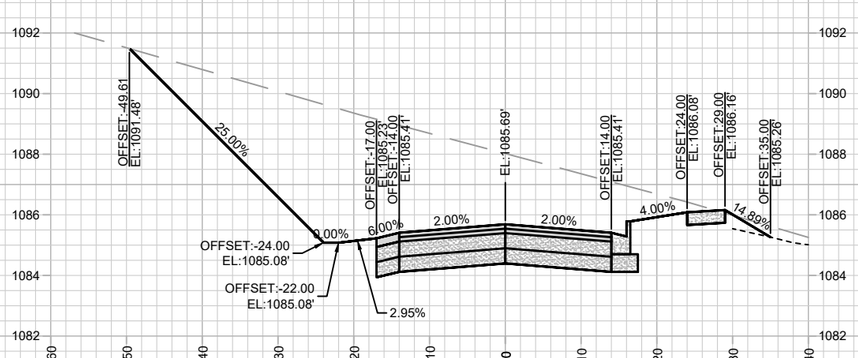

162+50.00

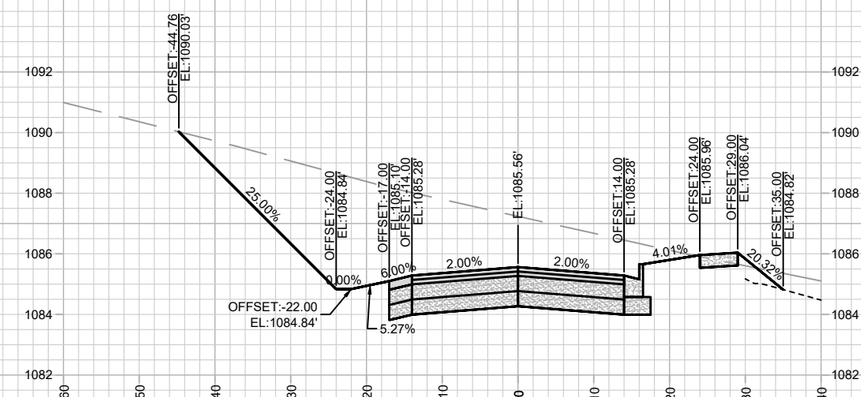

163+25.00

MARK	REVISION	DATE	BY
---	---	---	---
---	---	---	---
---	---	---	---
---	---	---	---

Designed By: GCIT | Date: 7/27/2026 10:09 AM | Scale: 1" = 20'

14931

X-3

14931

MADISON, WI

CONTRACT NO: 9386

CROSS SECTIONS - GOLDEN EAGLE DRIVE

WESTWIND - PHASE 2

M:\DESIGN\Projects\14931\CAD\Streets\14931EN-Xsections.dwg

CITY OF MADISON WISCONSIN

14931

X-3

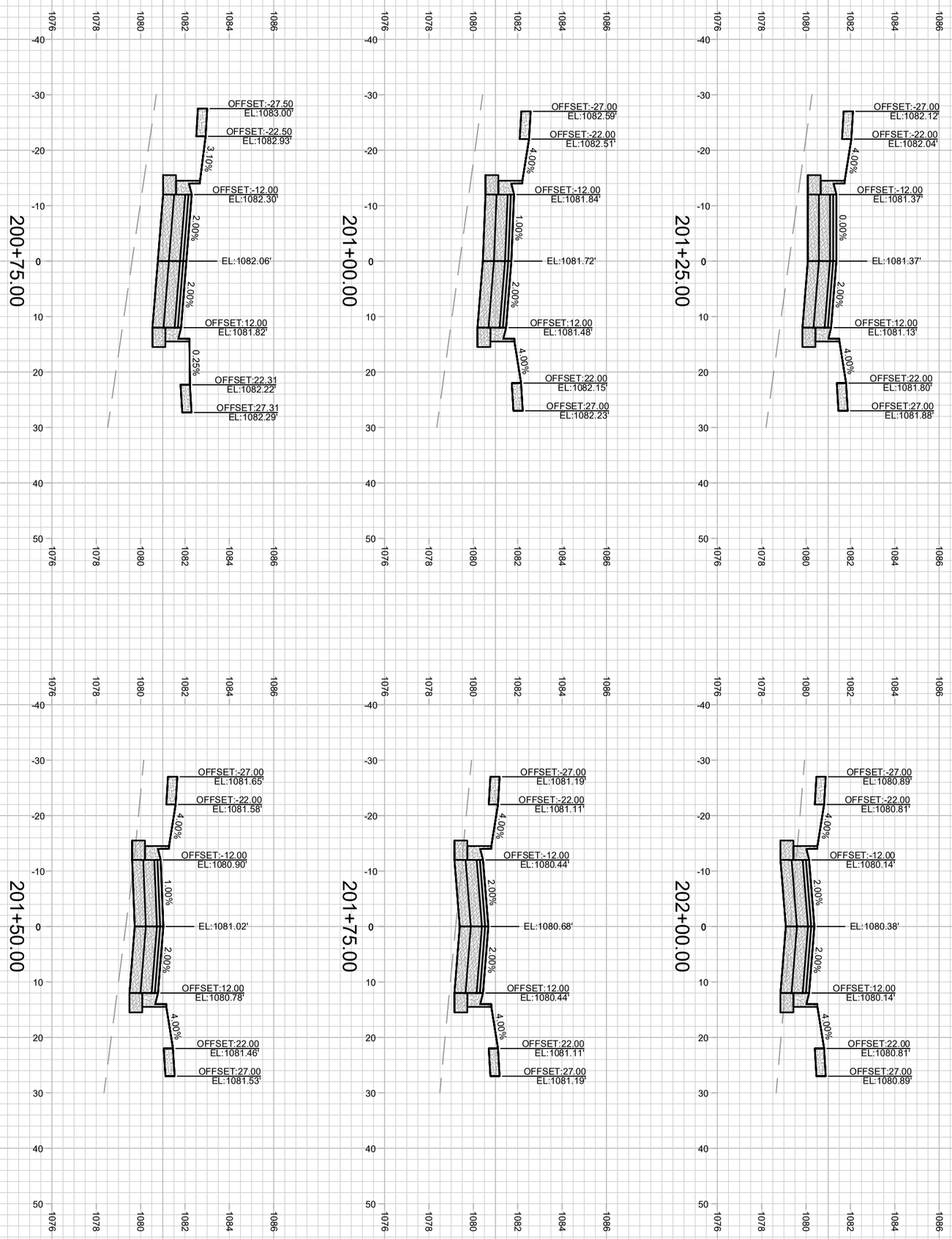

X-4

14931

CITY OF MADISON
MAYOR PAUL R. SOLIDUM

CROSS SECTIONS - RED PINE DRIVE 14931

WESTWIND - PHASE 2 MADISON, WI

M:\DESIGN\Projects\14931\CAD\Streets\14931EN-Xsections.dwg CONTRACT NO: 9386

MARK	REVISION	DATE	BY
---	---	---	---
---	---	---	---
---	---	---	---
---	---	---	---

Designed By: GCIT | Date: 7/27/2026 10:09 AM | Scale: 1" = 20'

14931 X-4

202+75.00

203+50.00

202+50.00

203+25.00

202+25.00

203+00.00

MARK	REVISION	DATE	BY
---	---	---	---
---	---	---	---
---	---	---	---
---	---	---	---

Designed By: GCIT | Date: 7/27/2026 10:10 AM | Scale: 1" = 20'

14931

MADISON, WI

CONTRACT NO: 9386

CROSS SECTIONS - RED PINE DRIVE

WESTWIND - PHASE 2

M:\DESIGN\Projects\14931\CAD\Streets\14931EN-Xsections.dwg

14931

X-5

X-5

204+25.00

205+00.00

204+00.00

204+75.00

203+75.00

204+50.00

MARK	REVISION	DATE	BY
---	---	---	---
---	---	---	---
---	---	---	---
---	---	---	---

Designed By: GCIT | Date: 7/27/2026 10:10 AM | Scale: 1" = 20'

14931

MADISON, WI

CONTRACT NO: 9386

CROSS SECTIONS - RED PINE DRIVE

WESTWIND - PHASE 2

M:\DESIGN\Projects\14931\CAD\Streets\14931EN-Xsections.dwg

14931

X-6

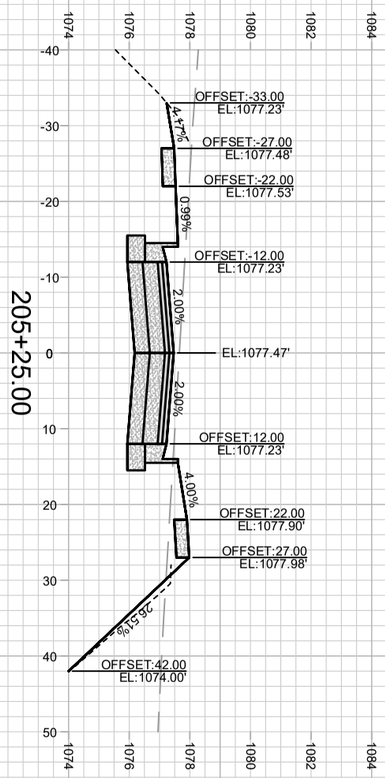

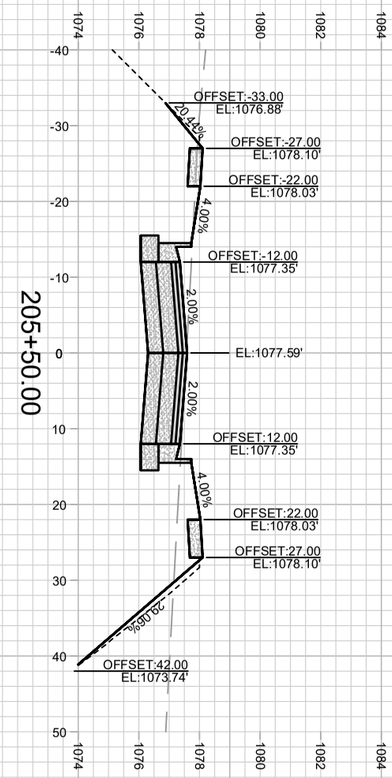

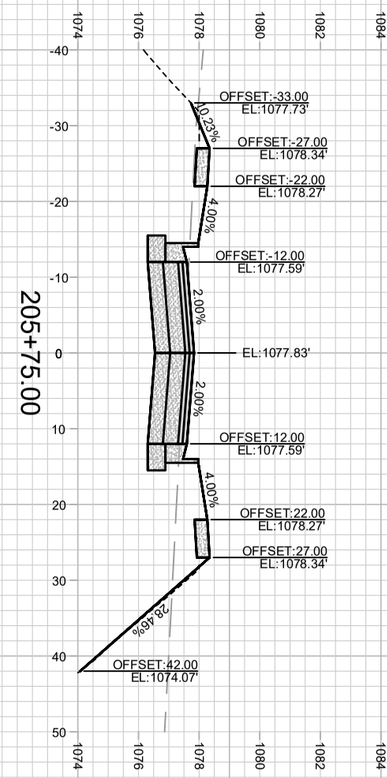

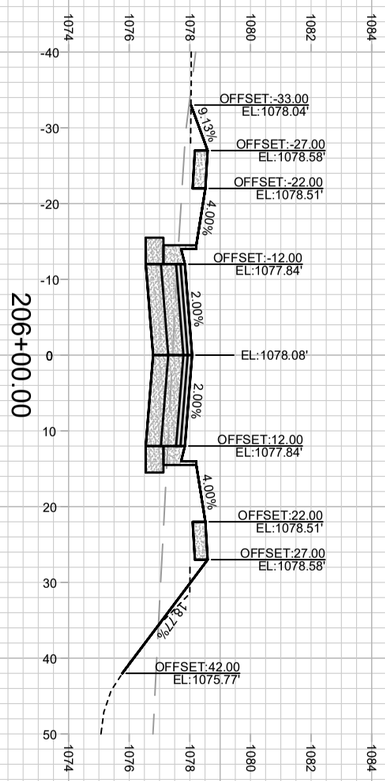

CROSS SECTIONS - RED PINE DRIVE		14931	
WESTWIND - PHASE 2		MADISON, WI	
M:\DESIGN\Projects\14931\CAD\Streets\14931EN-Xsections.dwg	CONTRACT NO:	9386	

MARK	REVISION	DATE	BY
---	---	---	---
---	---	---	---
---	---	---	---
---	---	---	---

Designed By: GCIT	Date: 7/27/2026 10:10 AM	Scale: 1" = 20'
14931		X-7

14931

X-7

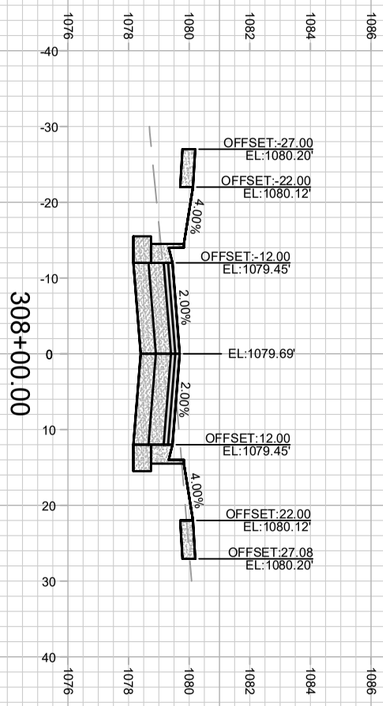

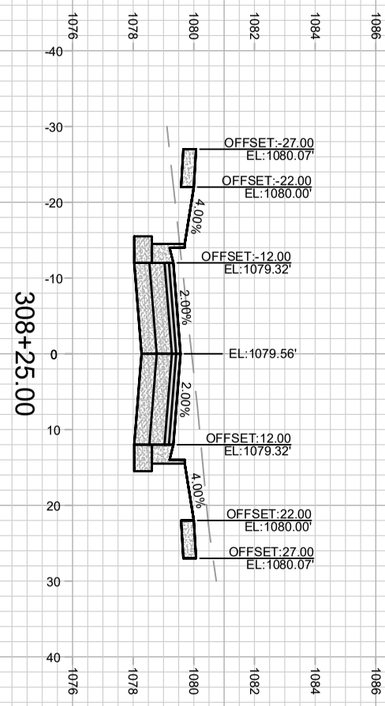

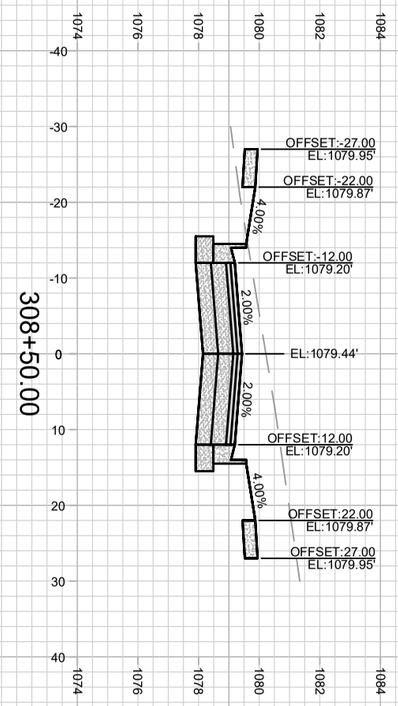

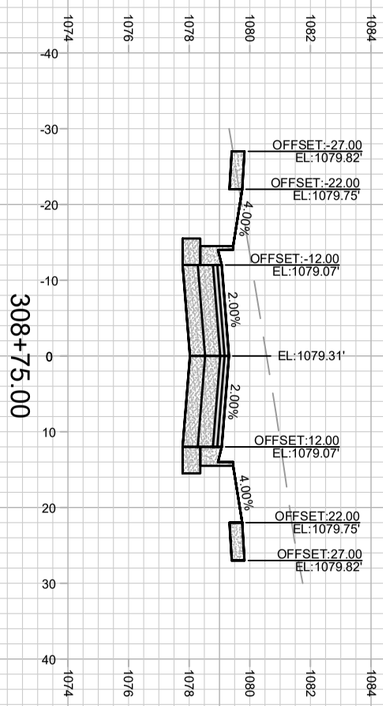

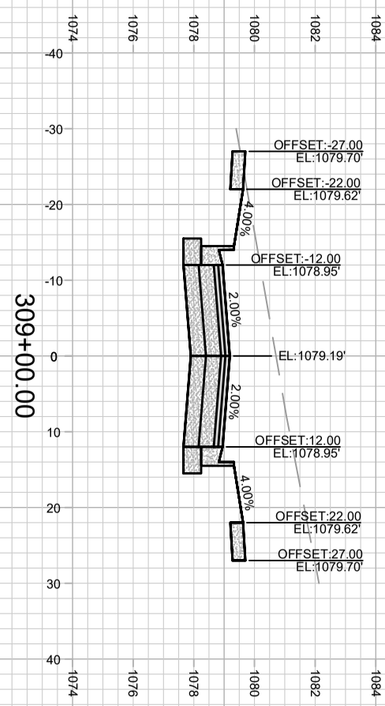

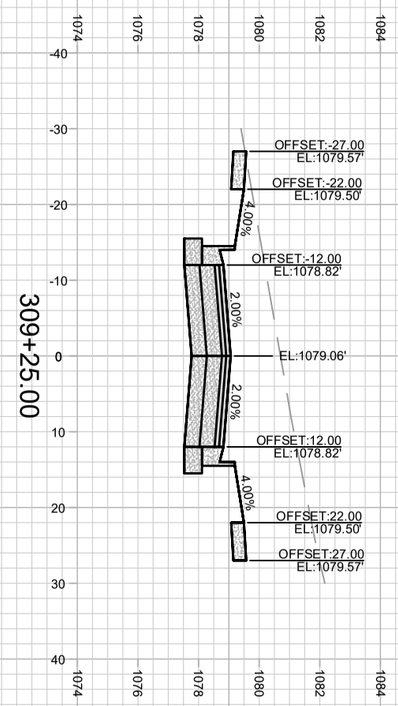

X-8

14931

CROSS SECTIONS - EMERALD ELM DRIVE 14931

WESTWIND - PHASE 2 MADISON, WI

M:\DESIGN\Projects\14931\CAD\Streets\14931EN-Xsections.dwg CONTRACT NO: 9386

MARK	REVISION	DATE	BY
---	---	---	---
---	---	---	---
---	---	---	---
---	---	---	---

Designed By: GCIT | Date: 7/27/2026 10:10 AM | Scale: 1" = 20'

14931 X-8

310+00.00

310+75.00

309+75.00

310+50.00

309+50.00

310+25.00

MARK	REVISION	DATE	BY
---	---	---	---
---	---	---	---
---	---	---	---
---	---	---	---

Designed By: GCIT | Date: 7/27/2026 10:10 AM | Scale: 1" = 20'

14931

MADISON, WI

CONTRACT NO: 9386

CROSS SECTIONS - EMERALD ELM DRIVE

WESTWIND - PHASE 2

M:\DESIGN\Projects\14931\CAD\Streets\14931EN-Xsections.dwg

14931

X-9

X-9

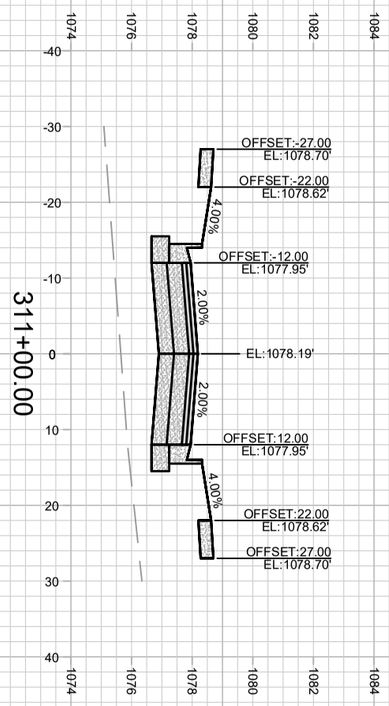

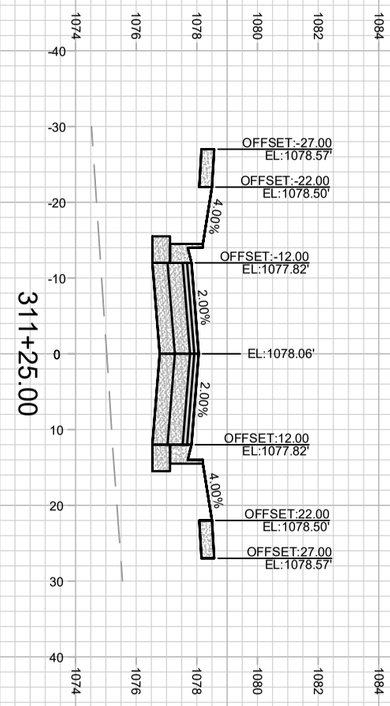

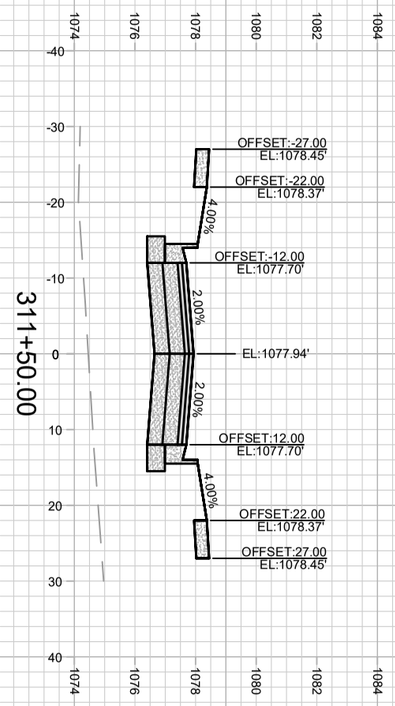

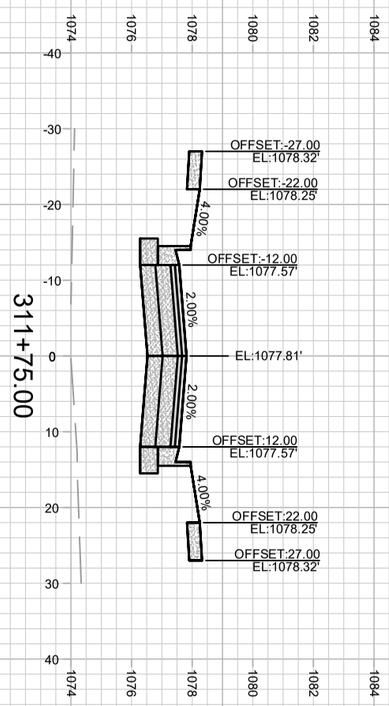

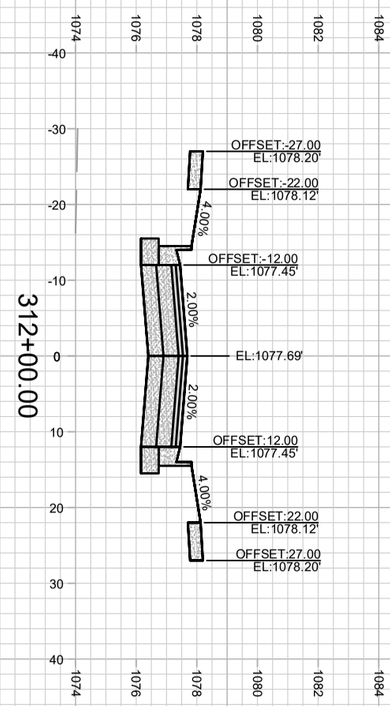

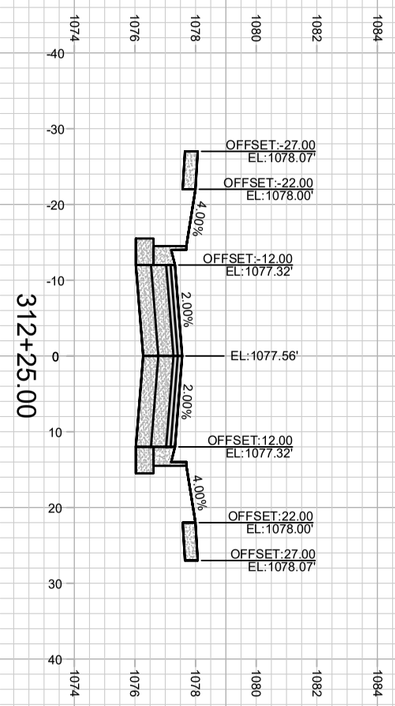

X-10

14931

CROSS SECTIONS - EMERALD ELM DRIVE 14931

WESTWIND - PHASE 2 MADISON, WI

M:\DESIGN\Projects\14931\CAD\Streets\14931EN-Xsections.dwg CONTRACT NO: 9386

MARK	REVISION	DATE	BY
---	---	---	---
---	---	---	---
---	---	---	---
---	---	---	---

Designed By: GCIT | Date: 7/27/2026 10:10 AM | Scale: 1" = 20'

14931 X-10

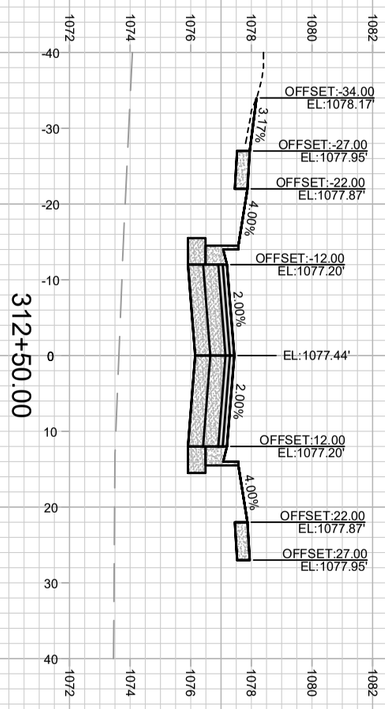

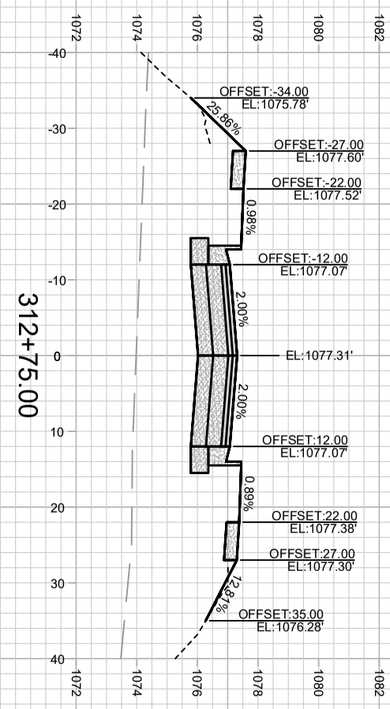

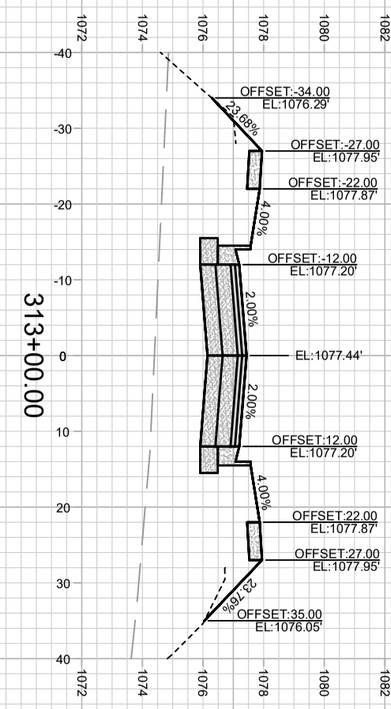

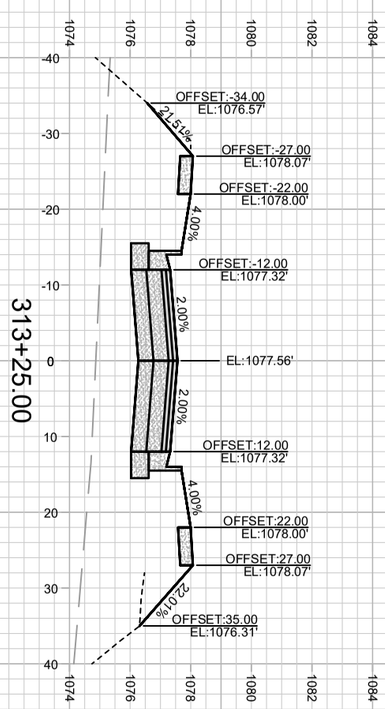

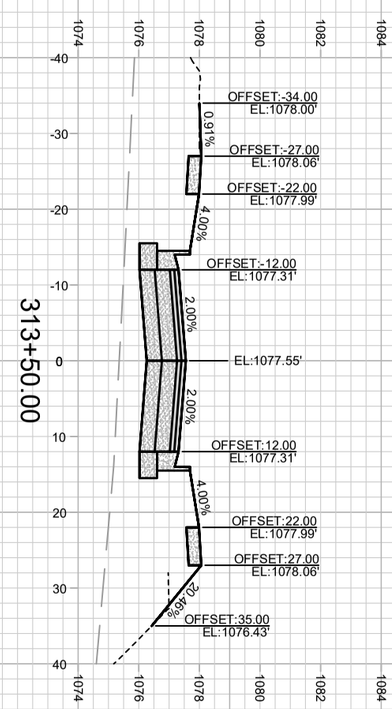

X-11

14931

CROSS SECTIONS - EMERALD ELM DRIVE 14931

WESTWIND - PHASE 2 MADISON, WI

M:\DESIGN\Projects\14931\CAD\Streets\14931EN-Xsections.dwg CONTRACT NO: 9386

MARK	REVISION	DATE	BY
---	---	---	---
---	---	---	---
---	---	---	---
---	---	---	---

Designed By: GCIT | Date: 7/27/2026 10:10 AM | Scale: 1" = 20'

14931 X-11

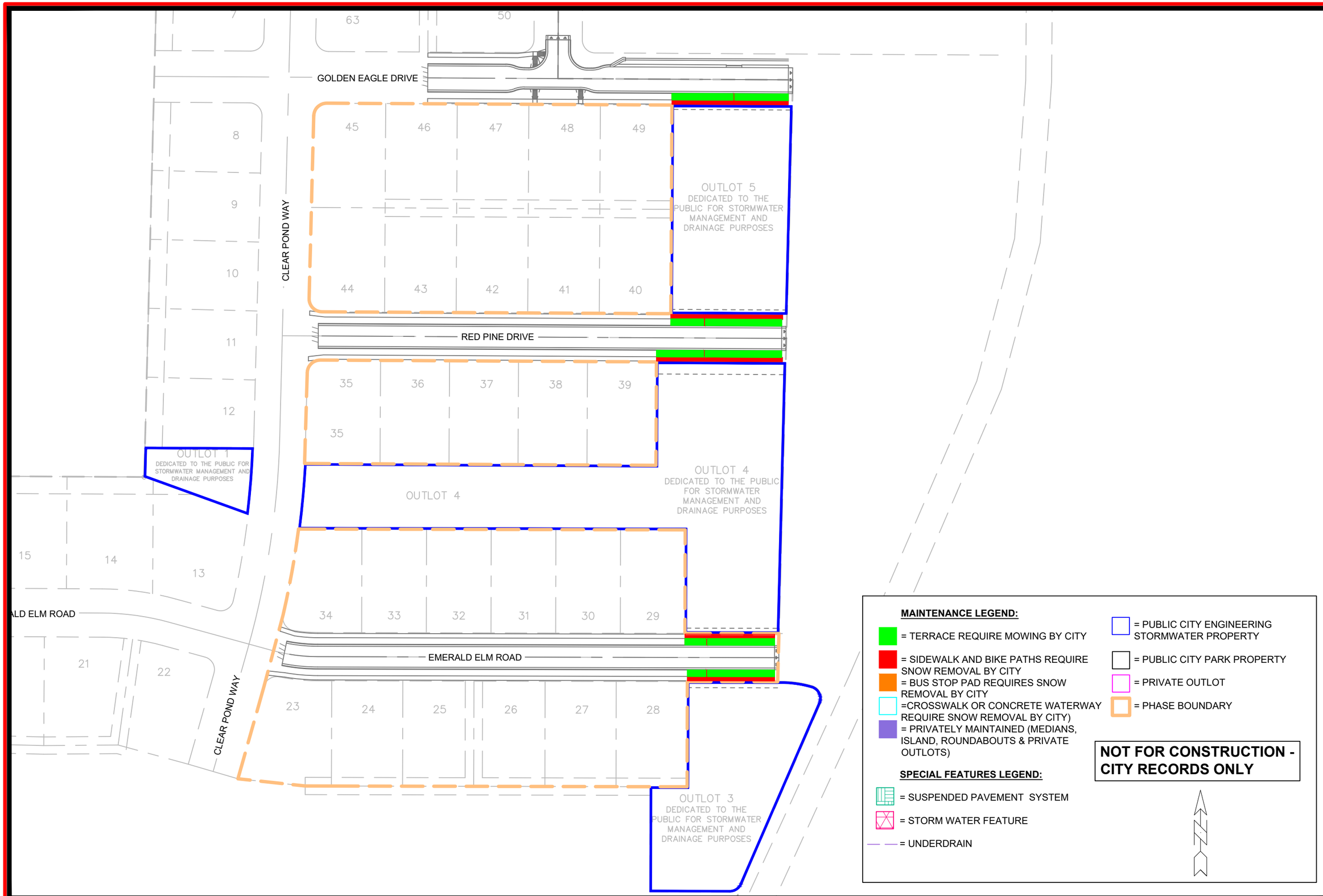

MARK	REVISION	DATE	BY
---	---	---	---
---	---	---	---
---	---	---	---
---	---	---	---

Designed By: ### Date: 7/27/2026 10:27 AM Scale: ########

14931

MADISON, WI

CONTRACT NO: 9386

MAINTENANCE PLAN

WESTWIND - PHASE 2

M:\DESIGN\Projects\14931\CAD\Streets\14931EN-Maintenance.dwg

14931

MN-1